# LINE 3L - KOMMODE

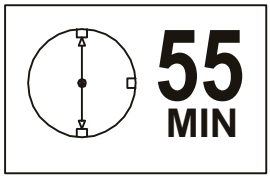


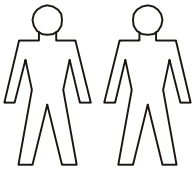

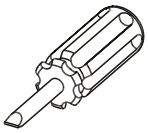

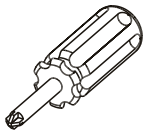

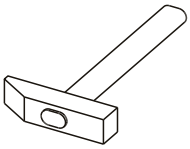

Ø5
Ø8

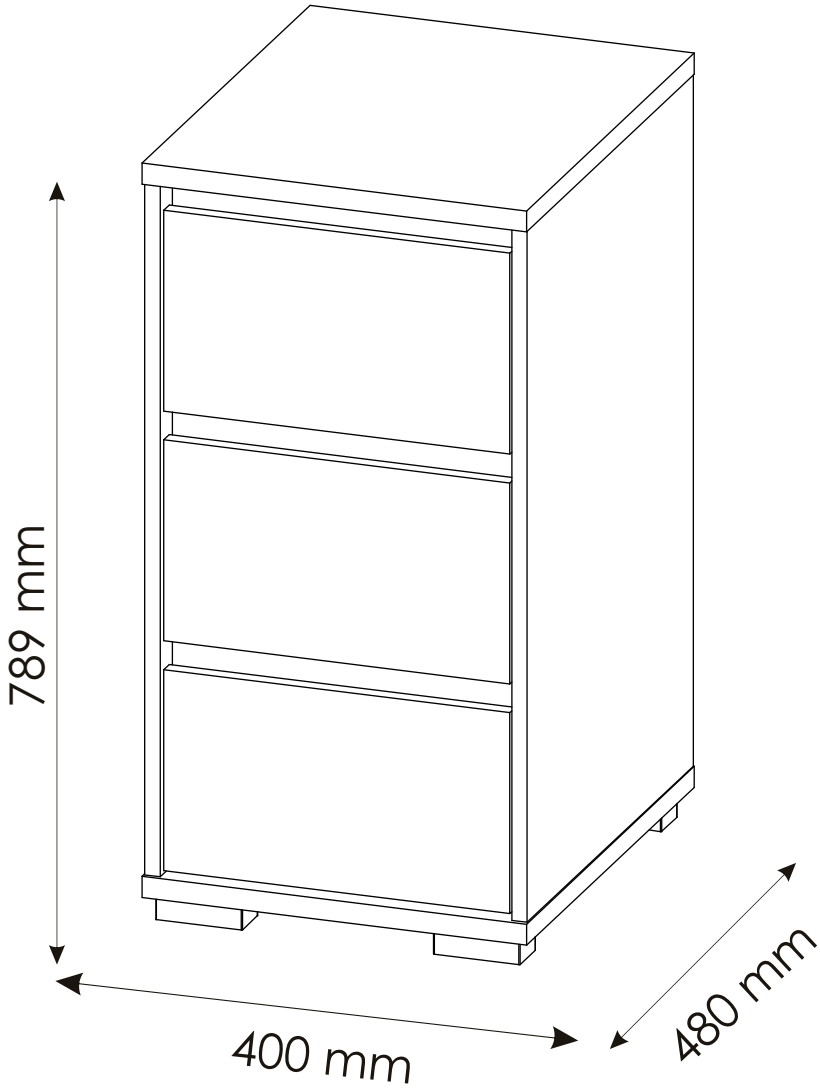


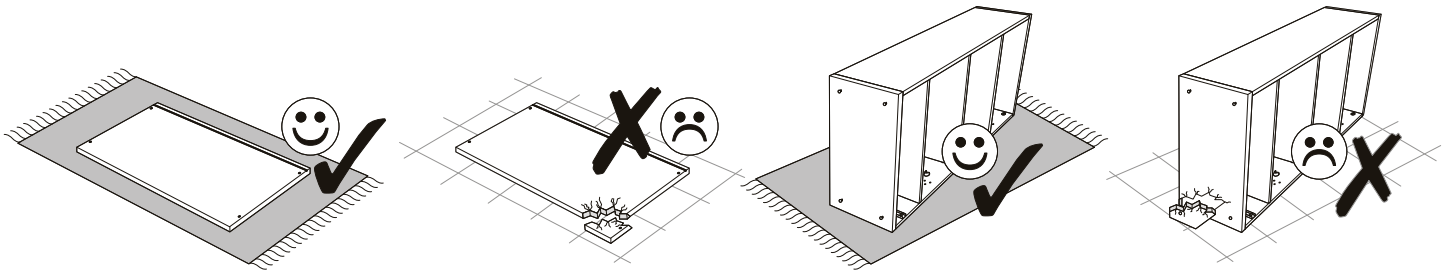

# LINE 3L - KOMMODE

| | | |
|---|---|---|
| A0 8 x 30mm | x32 | |
| B1 f 7 x 50 mm | x6 | |
| C0 | x12 | |
| B2 f 7 x 70 mm | x4 | |
| C2 | x22 | |
| C7 16mm | x22 | |
| D0 3 x 15 mm | x18 | |
| D21 5 x 13 mm | x25 | |
| D5 3,5 x 16 mm | x18 | |
| D14 4 x 35 mm | x12 | |
| K 4mm | x1 | |
| M1 | x18 | |
| N2 L-400 | x3 | |
| T2 | x4 | |
| U0 | x6 | |
| E0 5 x 50 mm 8 x 50 mm | x1 | |
| P0 | x1 | |

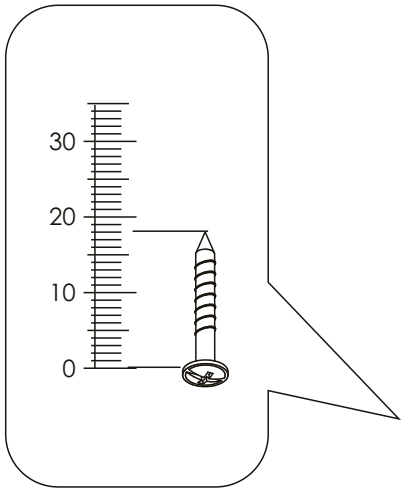

# LINE 3L - KOMMODE

| | | | | | |
|---|---|---|---|---|---|
| 1 | 720 | 475 | 16 | 1 | 1/1 |
| 2 | 720 | 475 | 16 | 1 | 1/1 |
| 3 | 400 | 480 | 22 | 1 | 1/1 |
| 4 | 400 | 480 | 22 | 1 | 1/1 |
| 5 | 400 | 140 | 16 | 3 | 1/1 |
| 6 | 400 | 140 | 16 | 3 | 1/1 |
| 7 | 309 | 138 | 16 | 3 | 1/1 |
| 8 | 360 | 209 | 16 | 3 | 1/1 |
| 9 | 366 | 59 | 32 | 3 | 1/1 |
| 10 | 319 | 394 | 3 | 3 | 1/1 |
| 11 | 730 | 376 | 3 | 1 | 1/1 |
| 12 | | | | | 1/1 |

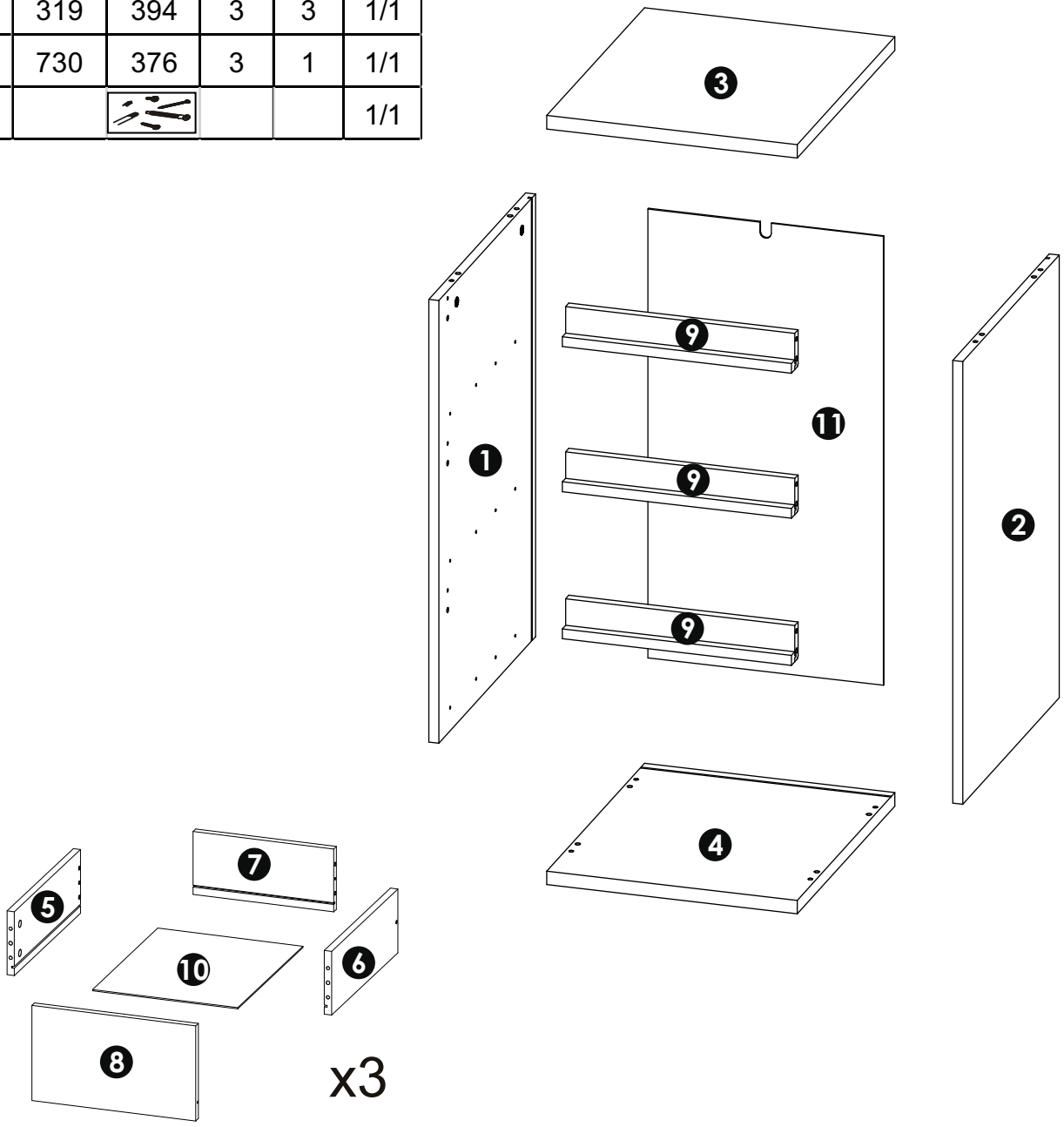

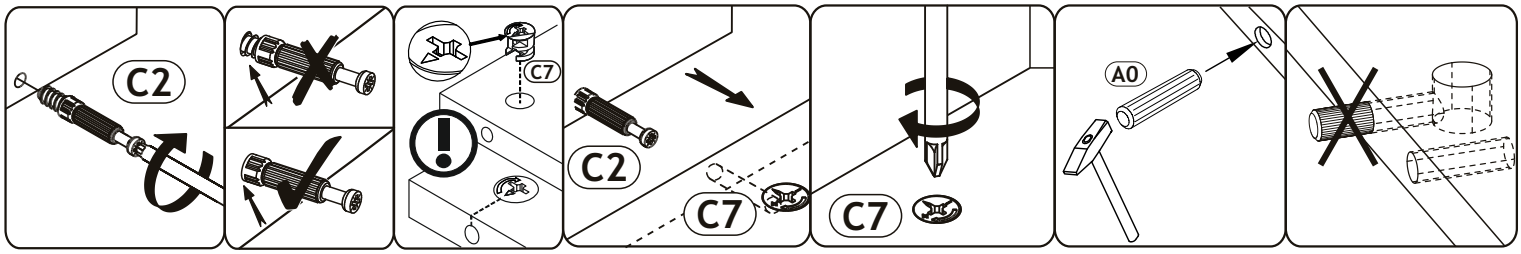


# 1

| | | |
|---|---|---|
| A0 8 x 30mm | x4 | |
| C7 16mm | x2 | |
| C2 | x3 | |
| D21 5 x 13 mm | x12 | |
| N2 L-400 | x3 | |

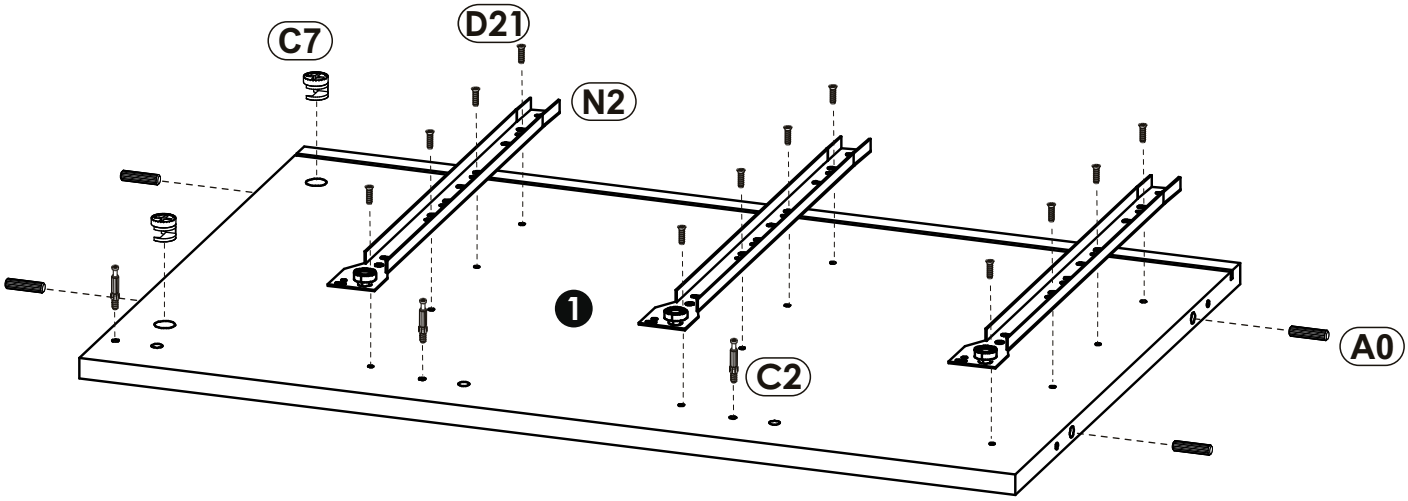


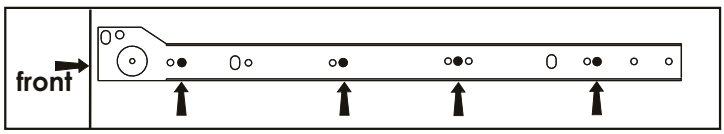


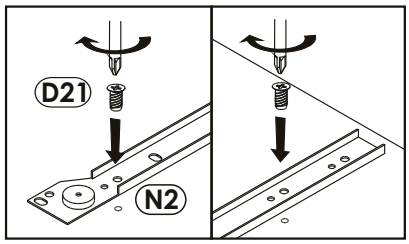


# 2

| | | |
|---|---|---|
| A0 8 x 30mm | x6 | |
| C7 16mm | x6 | |

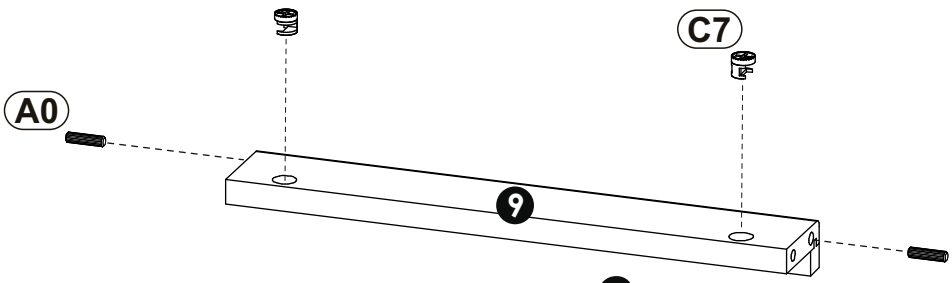


x3

# 3

| | | |
|---|---|---|
| A0 8 x 30mm x4 | C7 16mm x2 | C2 x3 |
| D21 5 x 13 mm x12 | N2 L-400 x3 | |

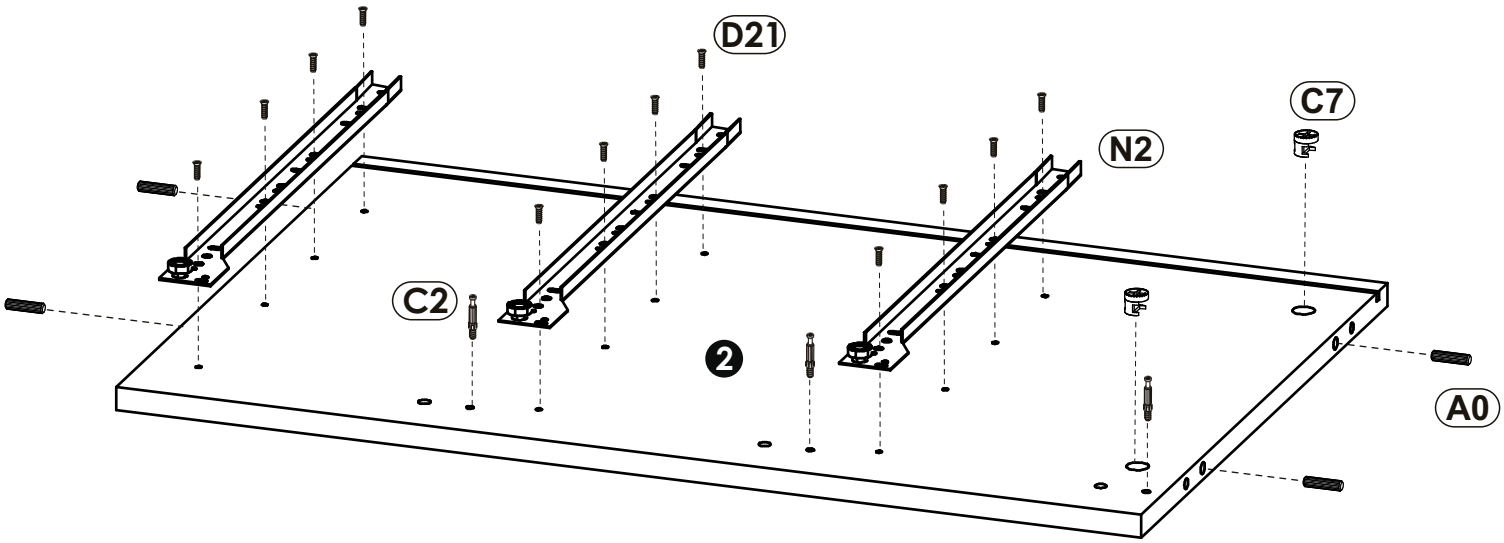


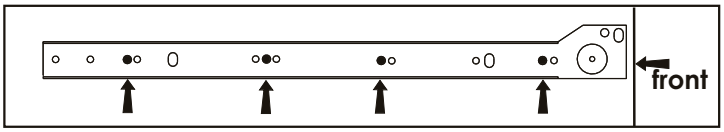


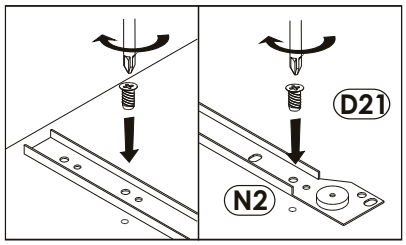


# 4

| | | |
|---|---|---|
| C2 x4 | D21 5 x 13 mm x1 | P0 x1 |

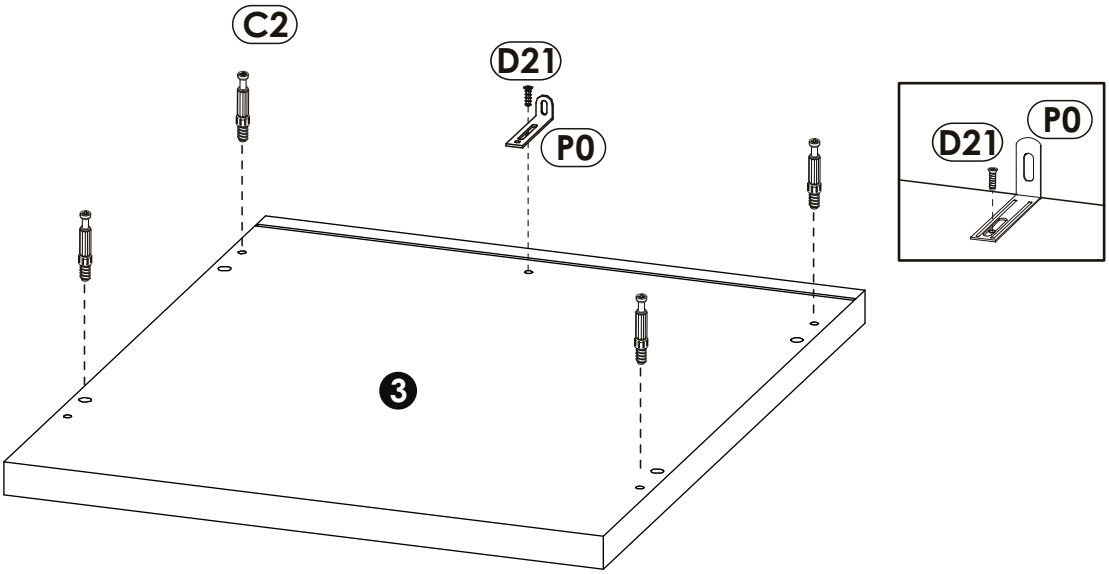

## 5

| A0 | C7 |
|---|---|
| 8 x 30mm | 16mm |
| x6 | x12 |

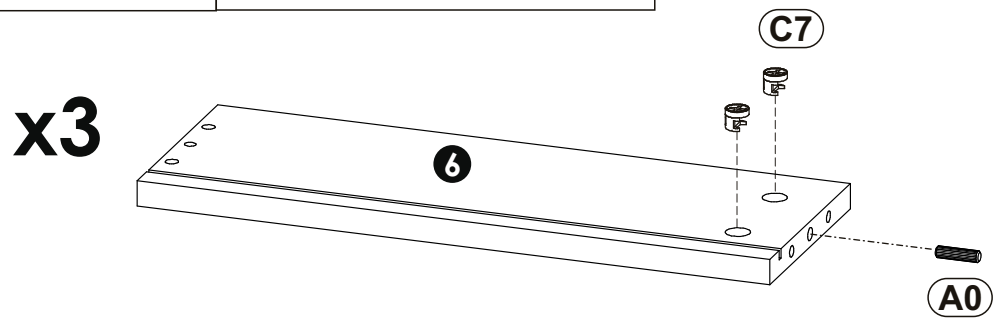


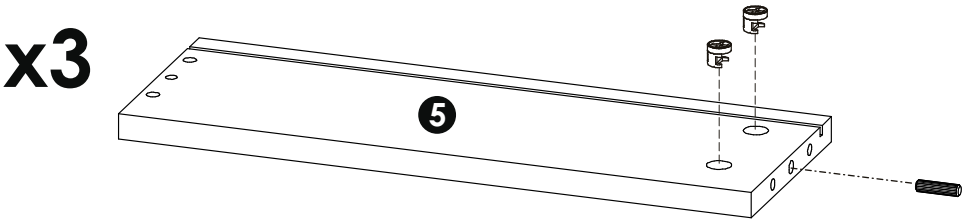


## 6

| A0 |
|---|
| 8 x 30mm |
| x12 |

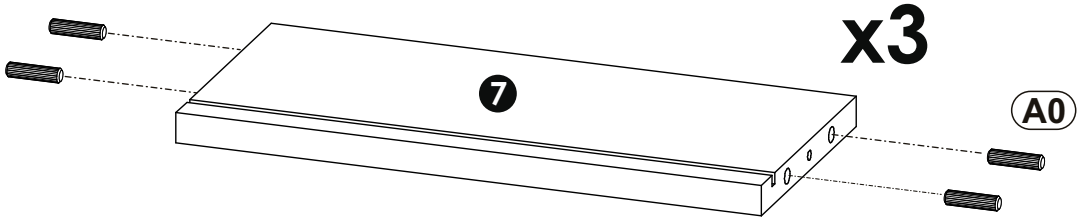


## 7

| C2 | U0 |
|---|---|
| x12 | x6 |

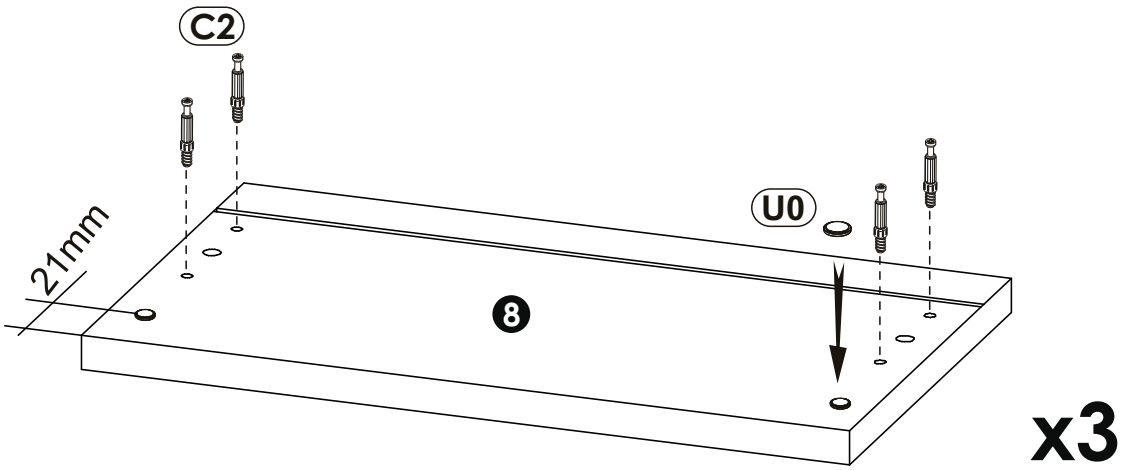

## 8

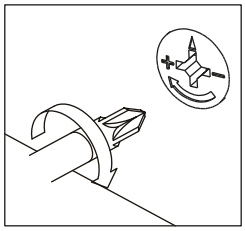

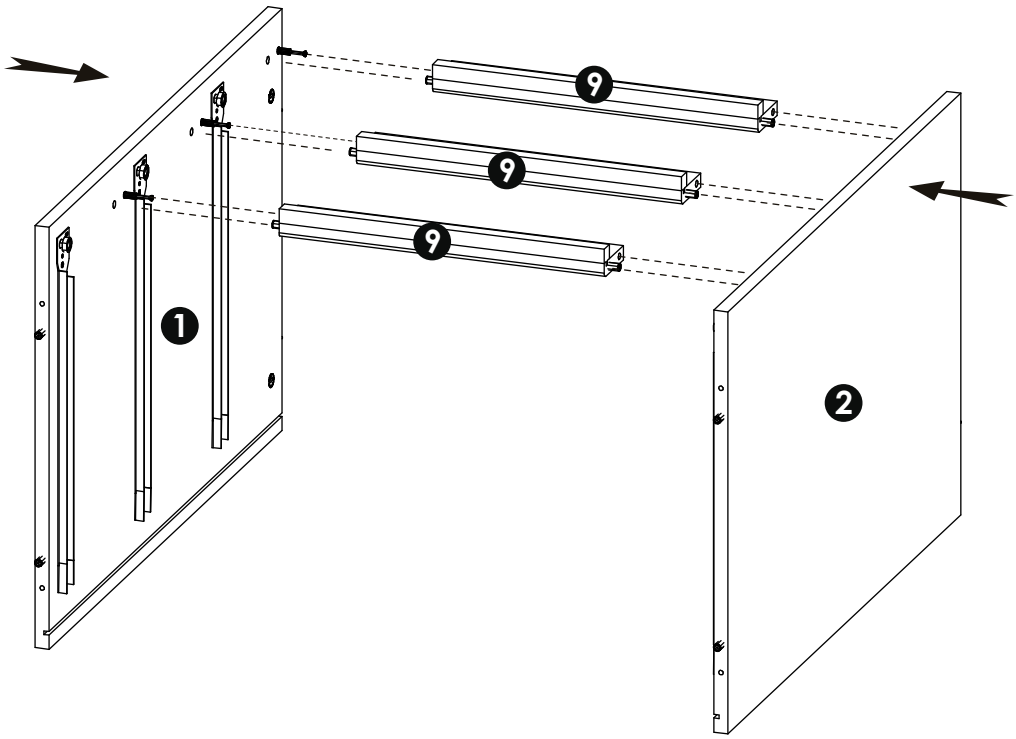


## 9

| B2 f 7 x 70 mm x4 | K 4mm x1 |
|---|---|
| 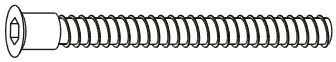 | 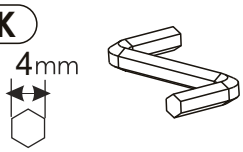 |

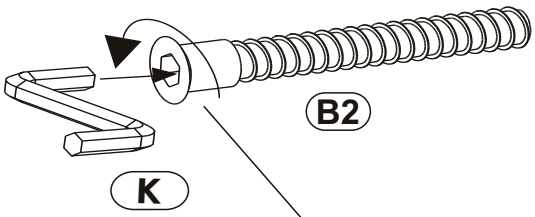


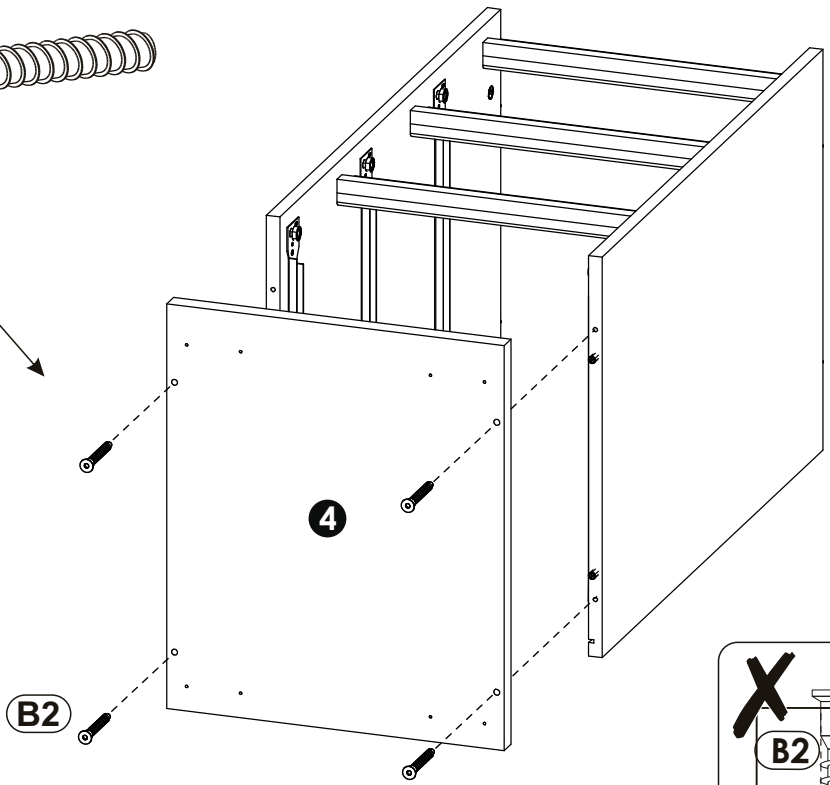


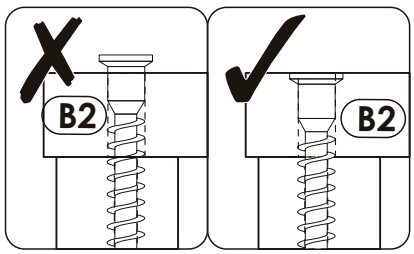

# 10

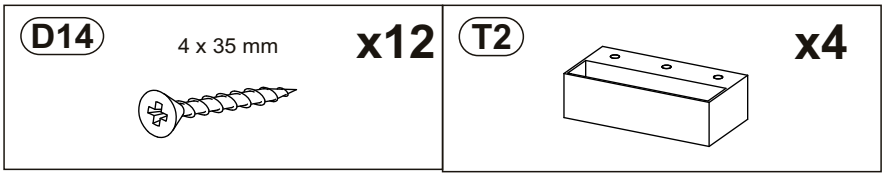


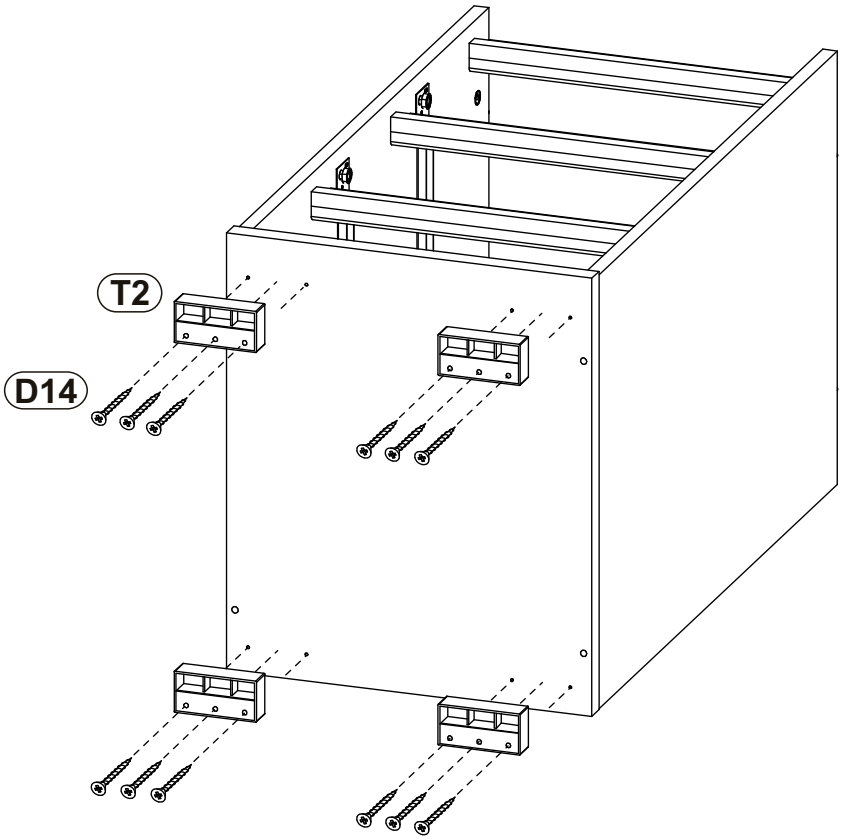


# 11

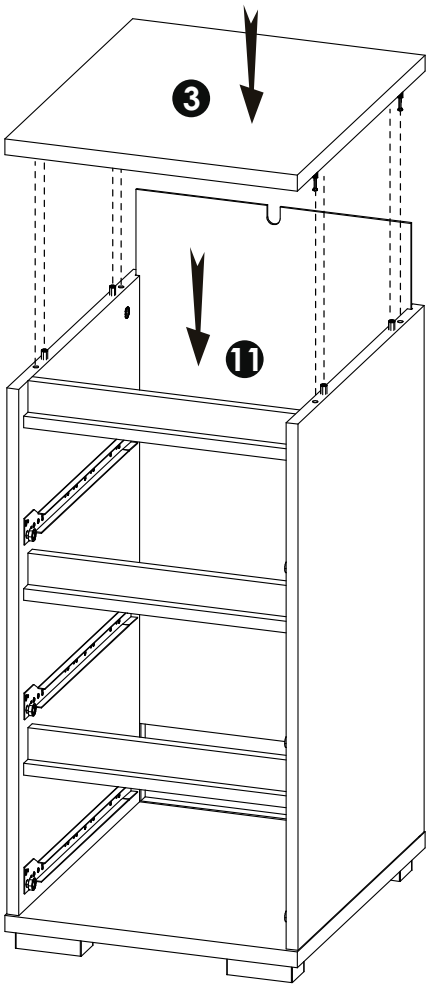


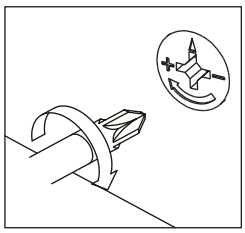

# 12▶

| D0 | M1 |
|---|---|
| 3 x 15 mm x6 | x6 |

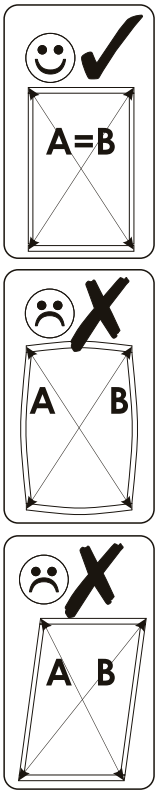


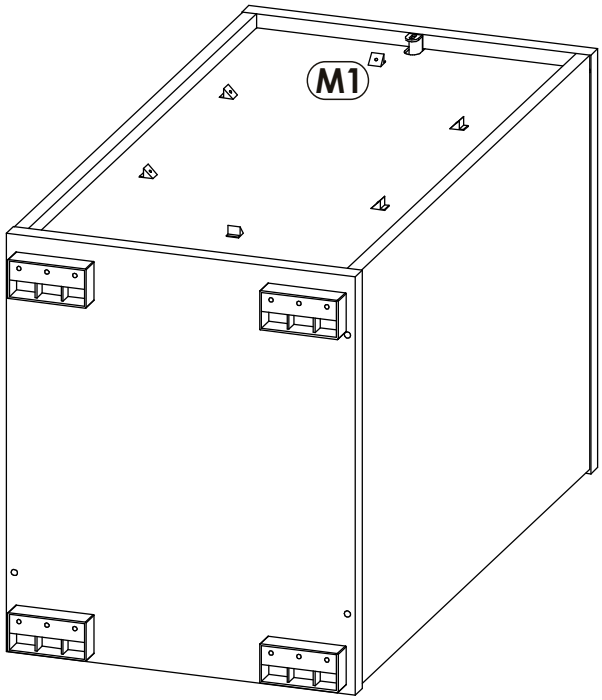


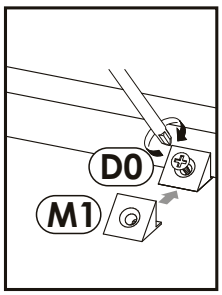


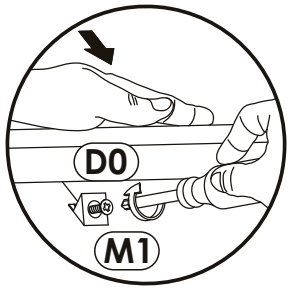


# 13▶

| B1 | K |
|---|---|
| f 7 x 50 mm x6 | 4mm x1 |

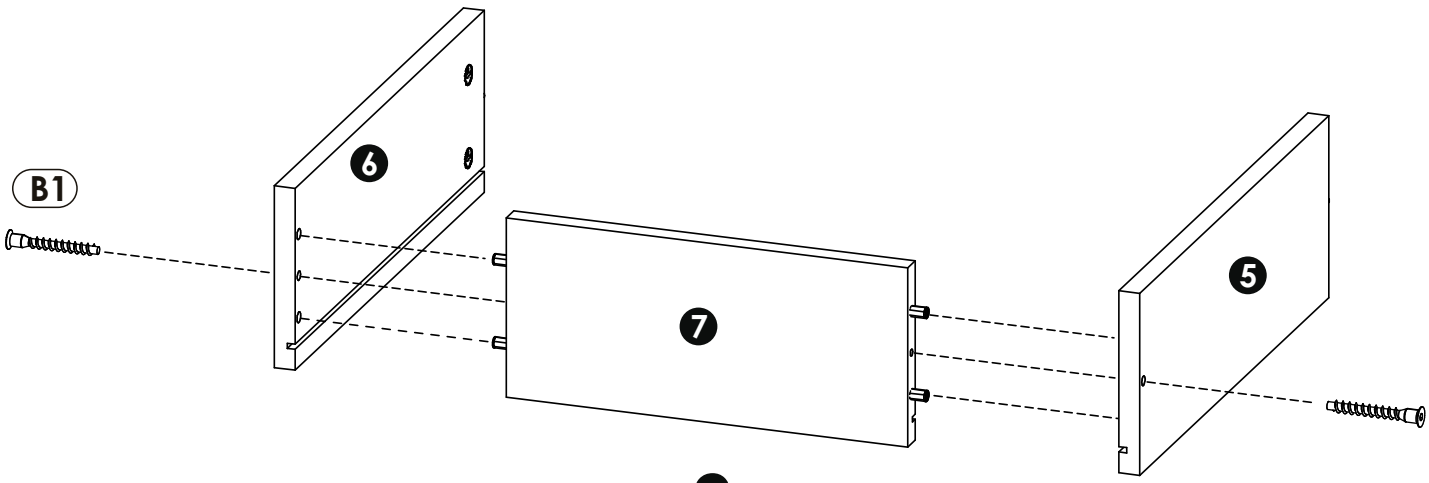


**x3**

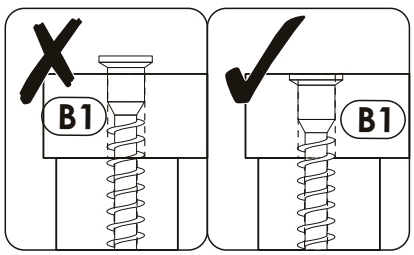

# 14▶

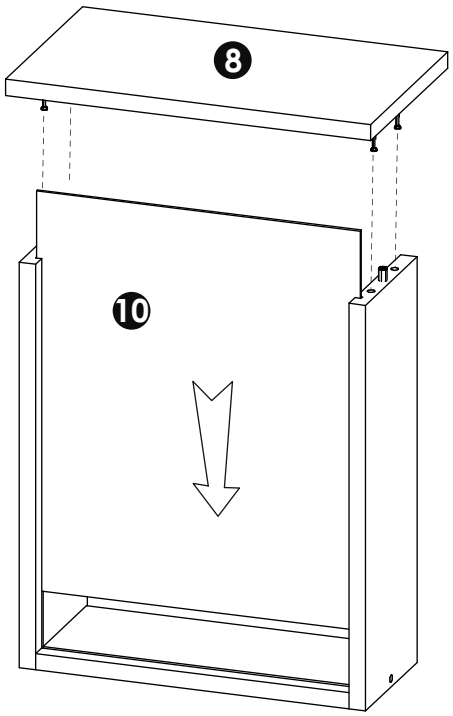


x3

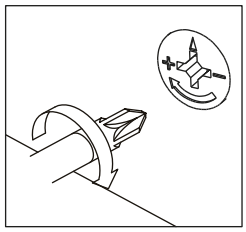

# 15▶

| | |
|---|---|
| D0 3 x 15 mm x12 | M1 x12 |

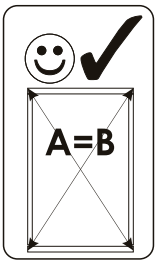


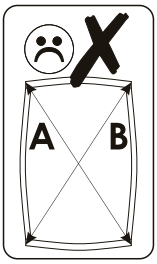


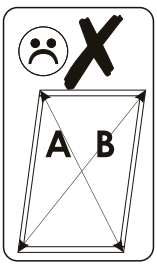


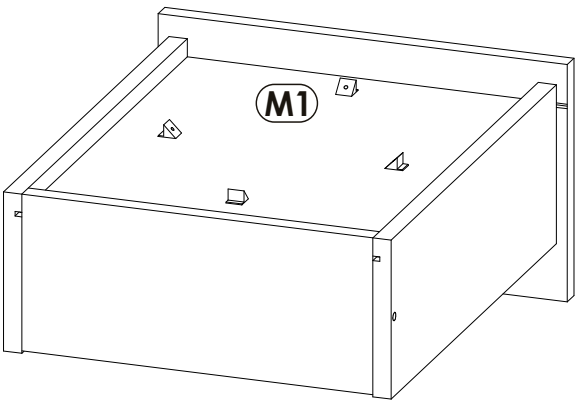


x3

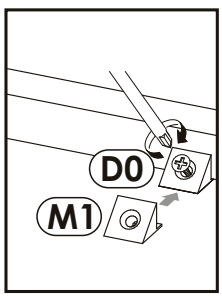


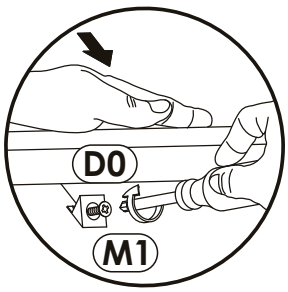

# 16

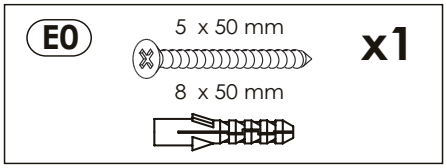


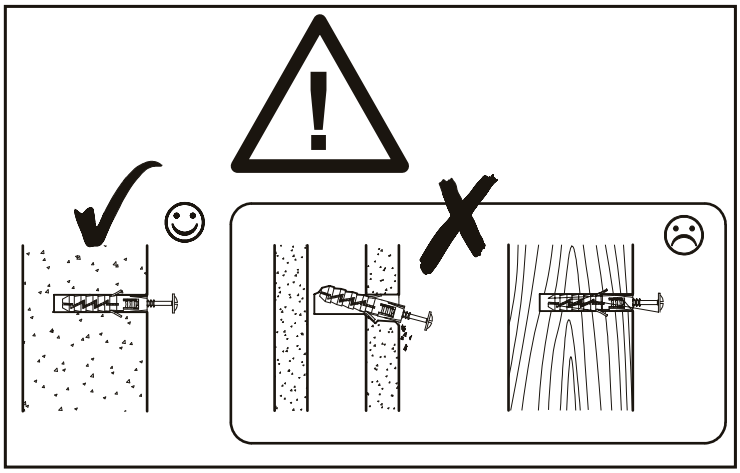

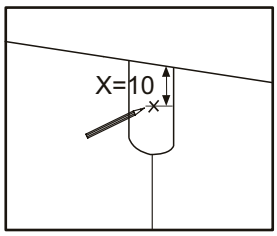


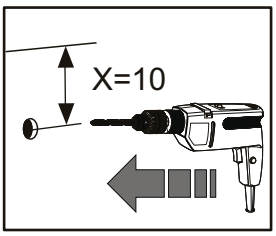


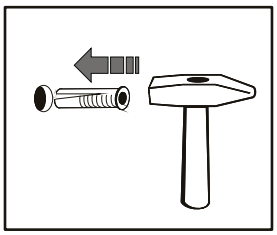

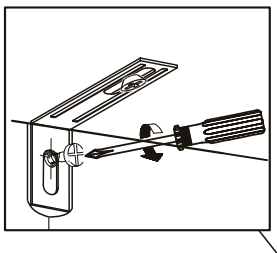

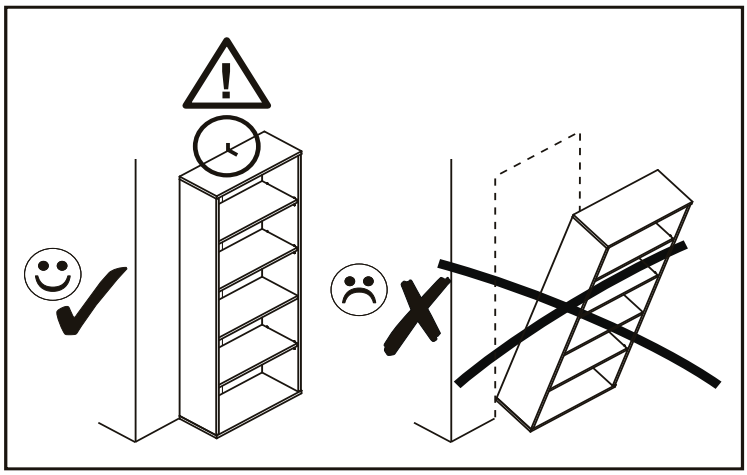

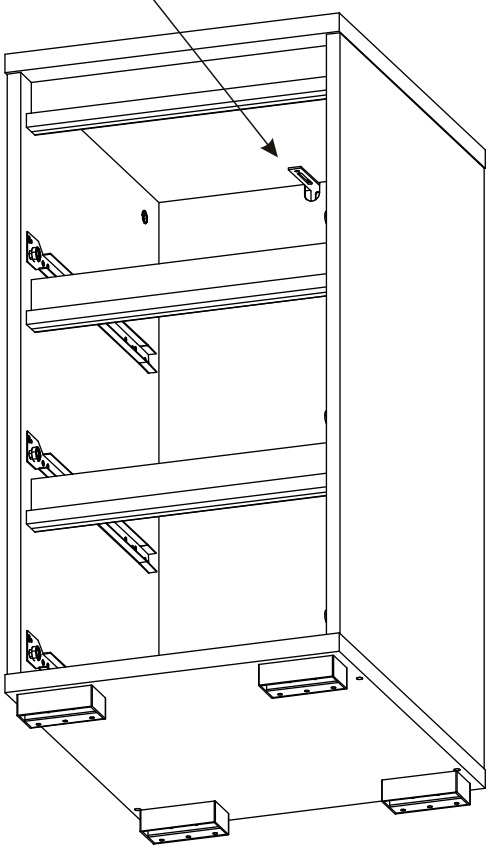

## 17▶

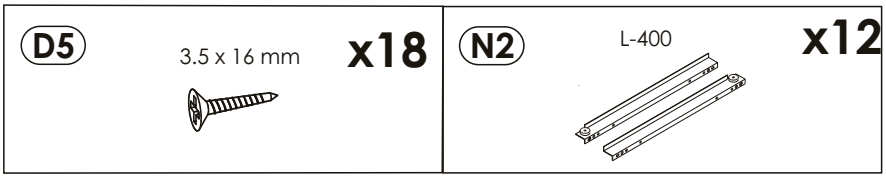
D5
3.5 x 16 mm
x18
N2
L-400
x12

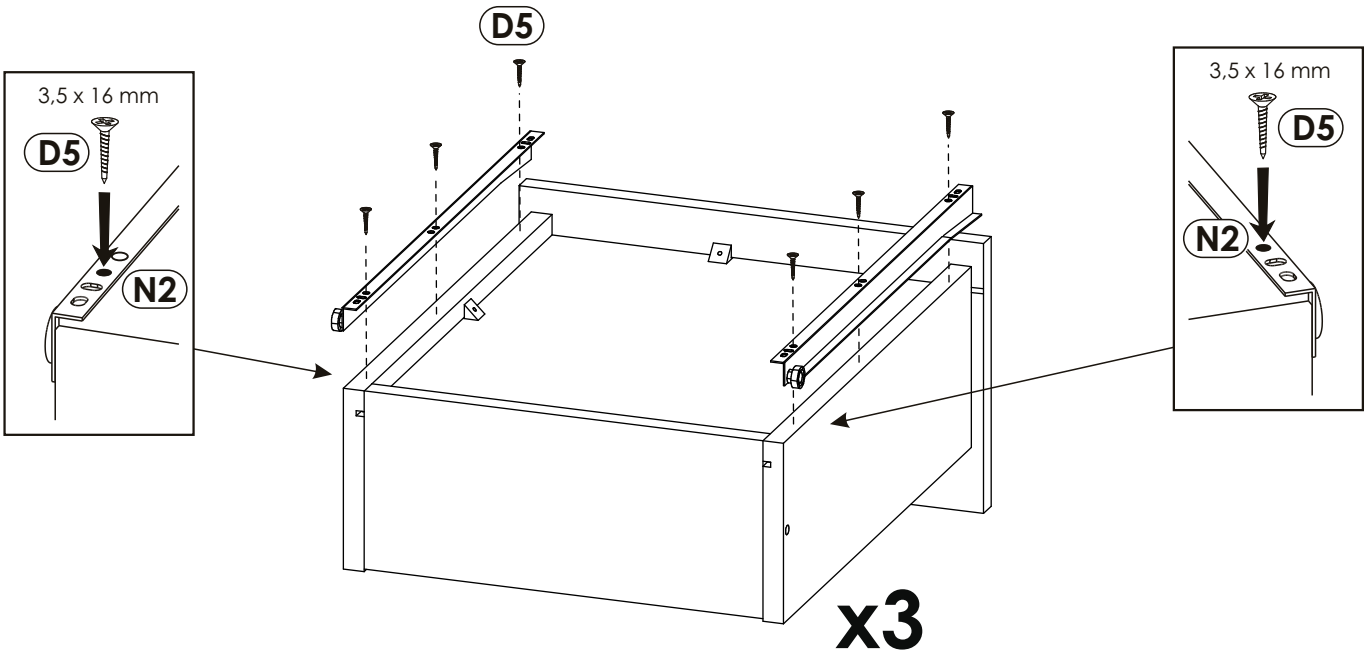
D5
3,5 x 16 mm
D5
N2
3,5 x 16 mm
D5
N2
x3

## 18▶

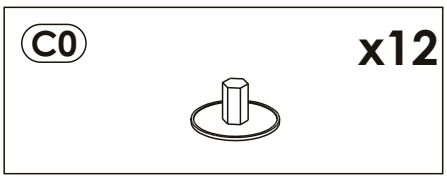
C0
x12

max

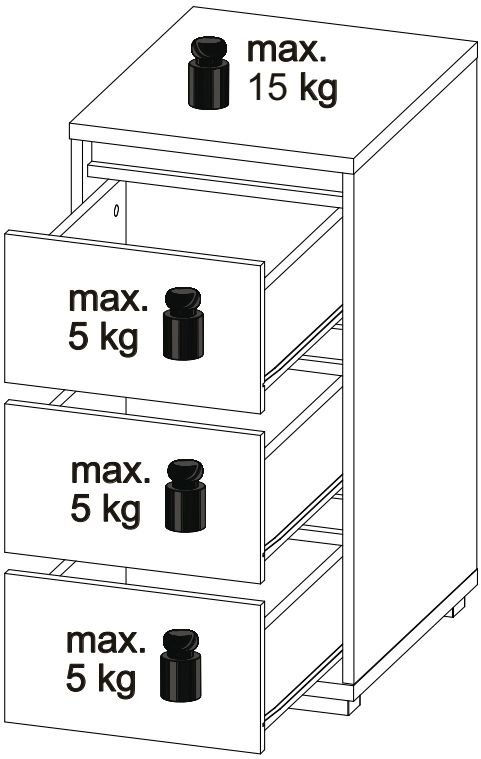
max.
15 kg
max.
5 kg
max.
5 kg
max.
5 kg

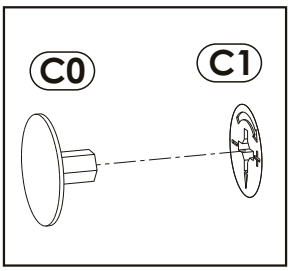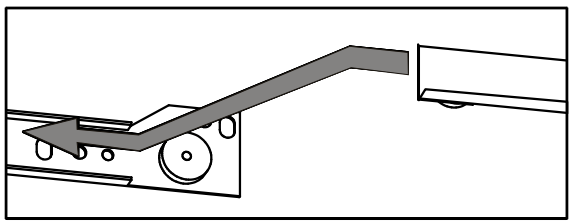
C0
C1