17130023-01

COUCHTISCH

BDSK Handels GmbH & Co.KG
Mergentheimer Straße 59
DE-97084 Würzburg
E-Mail:Info@xxxlutz.at

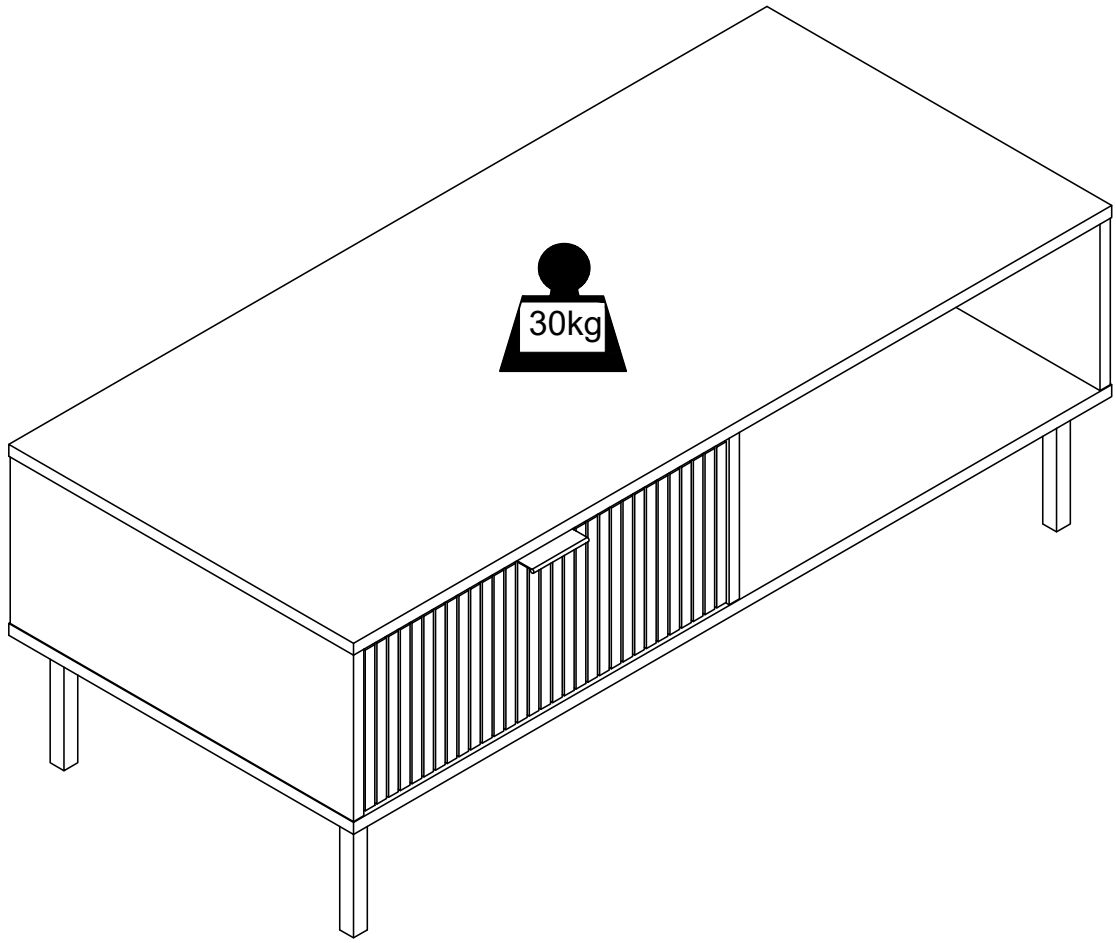

22
PAP

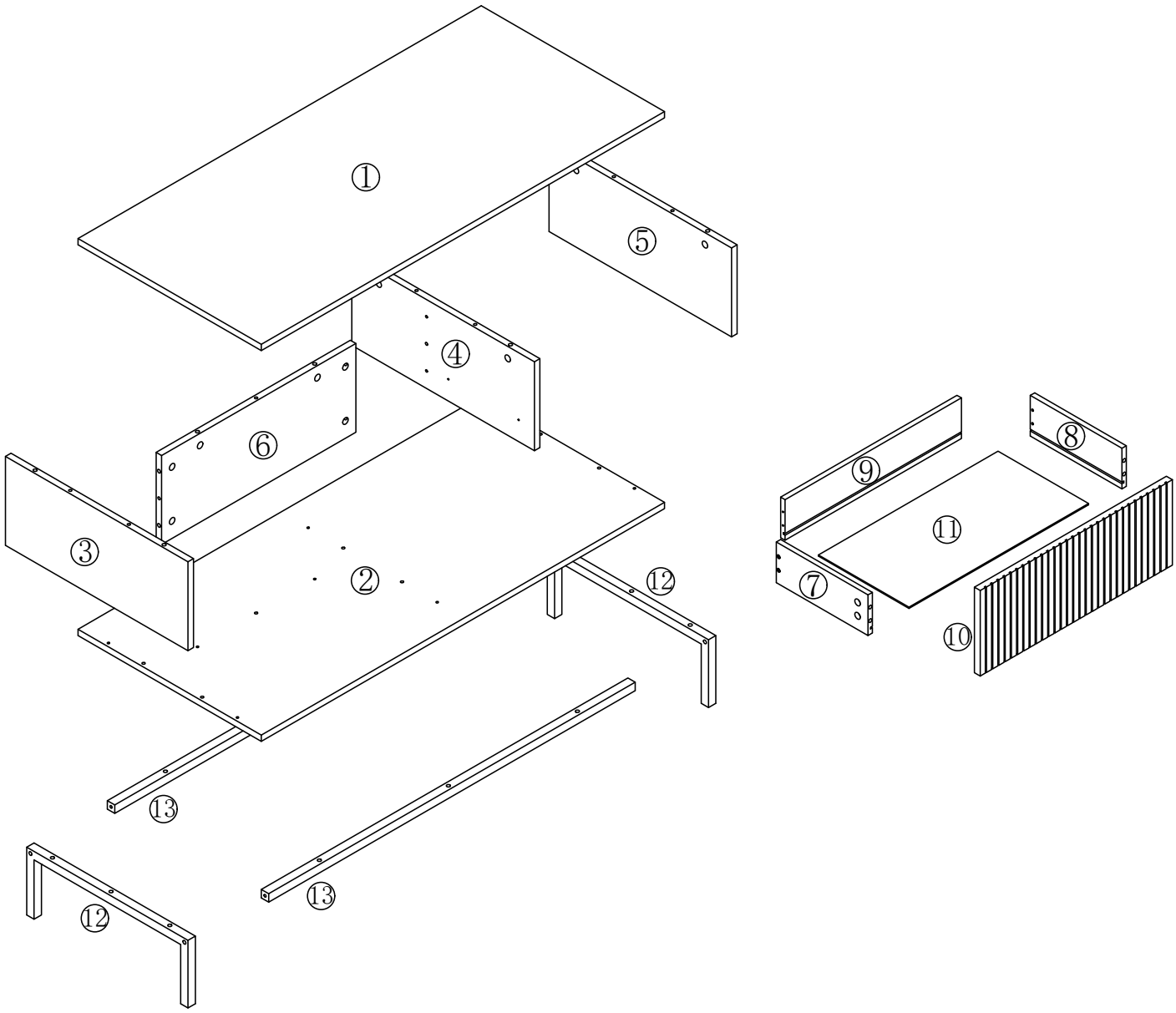

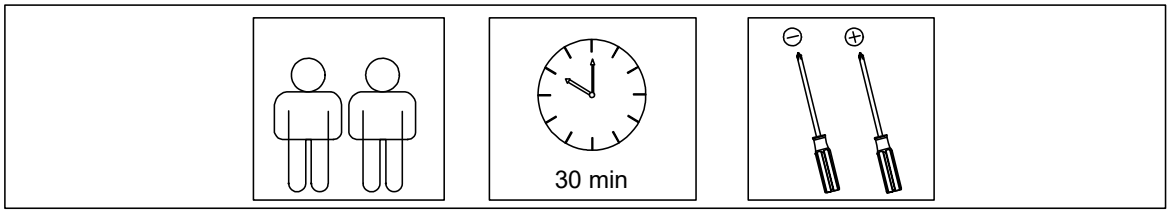

A ×16	B ×16	C ×16	D ×12	E ×10	F ×12	G ×4
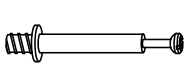		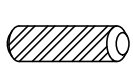	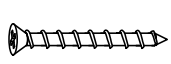			
M6x35MM	φ15x10	Φ6x30	M4x40MM	M3x12MM	M6x30MM	M6x40MM

H ×1	I ×16	J ×1	CL ×1	CR ×1	DL ×1	DR ×1
		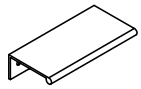	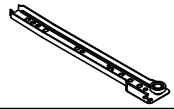	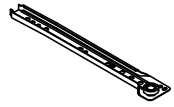	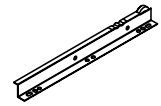	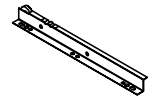
			250mm	250mm	250mm	250mm

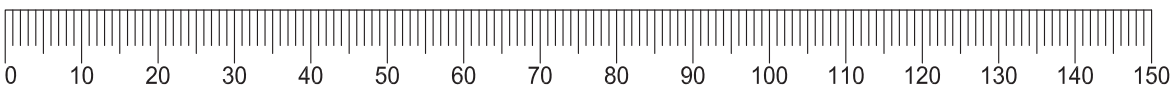

①

A	×12
M6x35MM	

E	×4
M3x12MM	

CL	×1

CR	×1

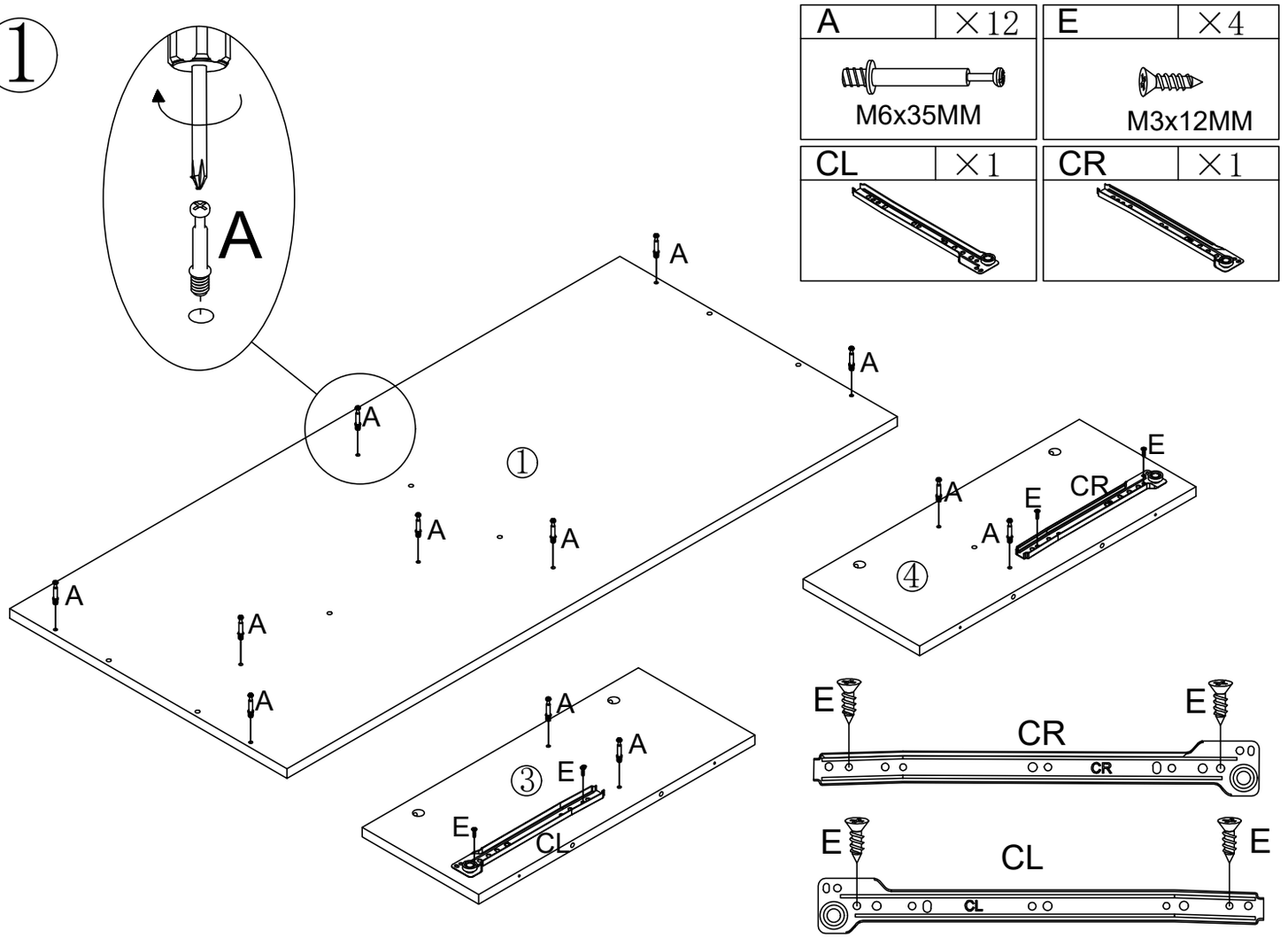

②

B	×4
φ15x10	

C	×2
φ6x30	

I	×4

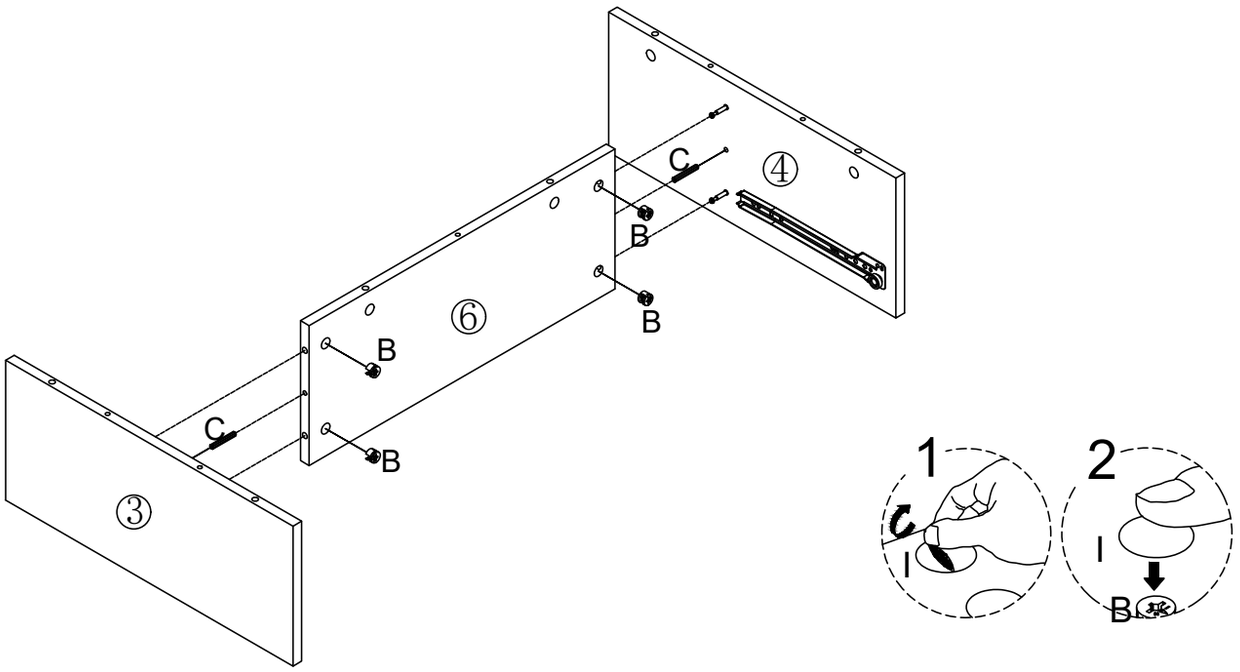

③

B	×8
φ15x10	

C	×7
φ6x30	

I	×8

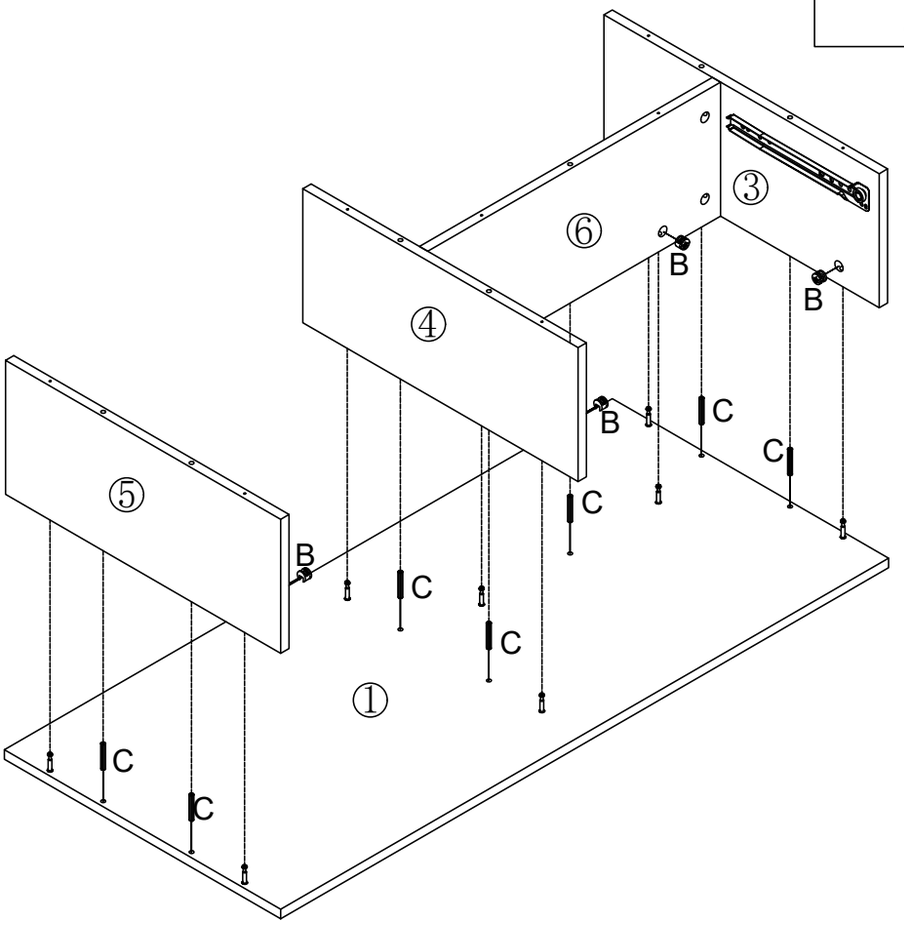

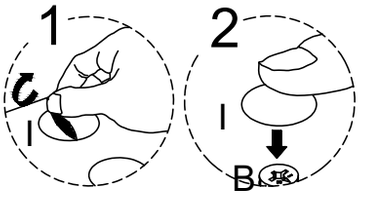

④

C	×7
φ6x30	

D	×8
M4x40MM	

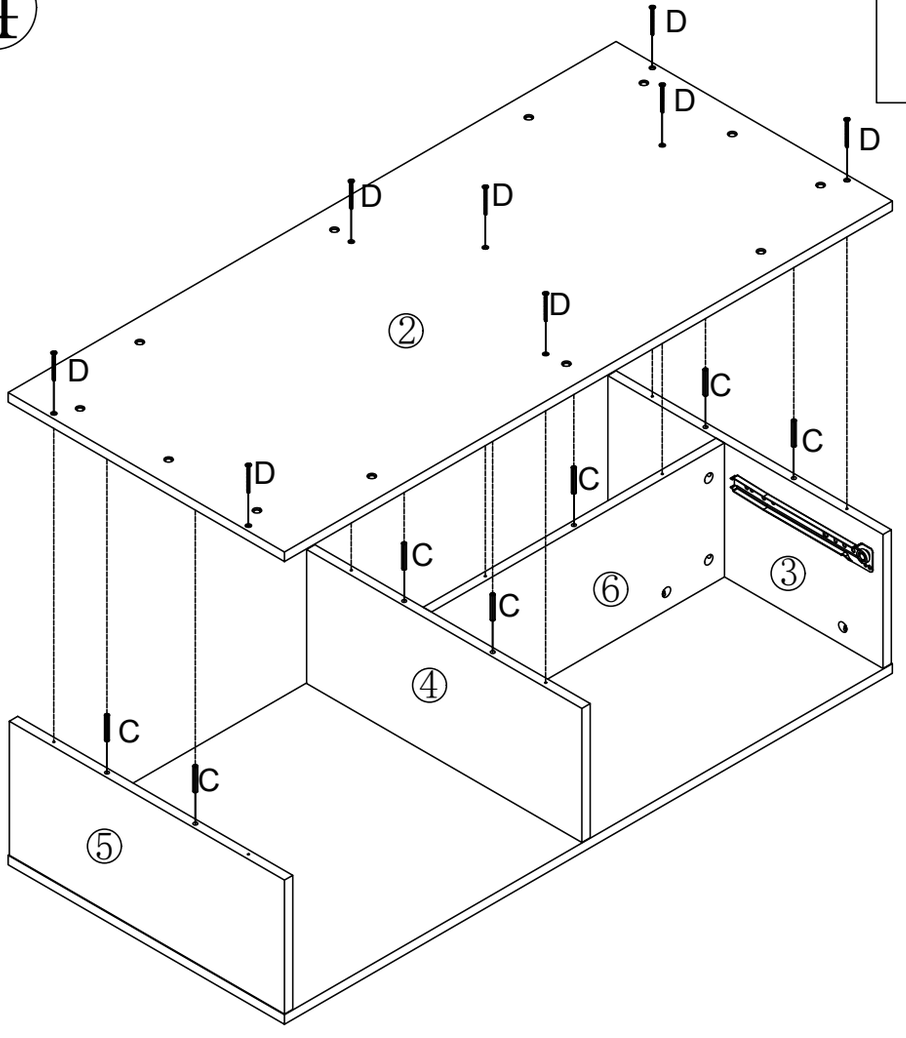

5

G	×4
	
M6x40MM	

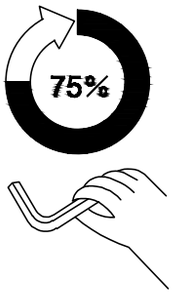

6

F	×12
	
M6x30MM	

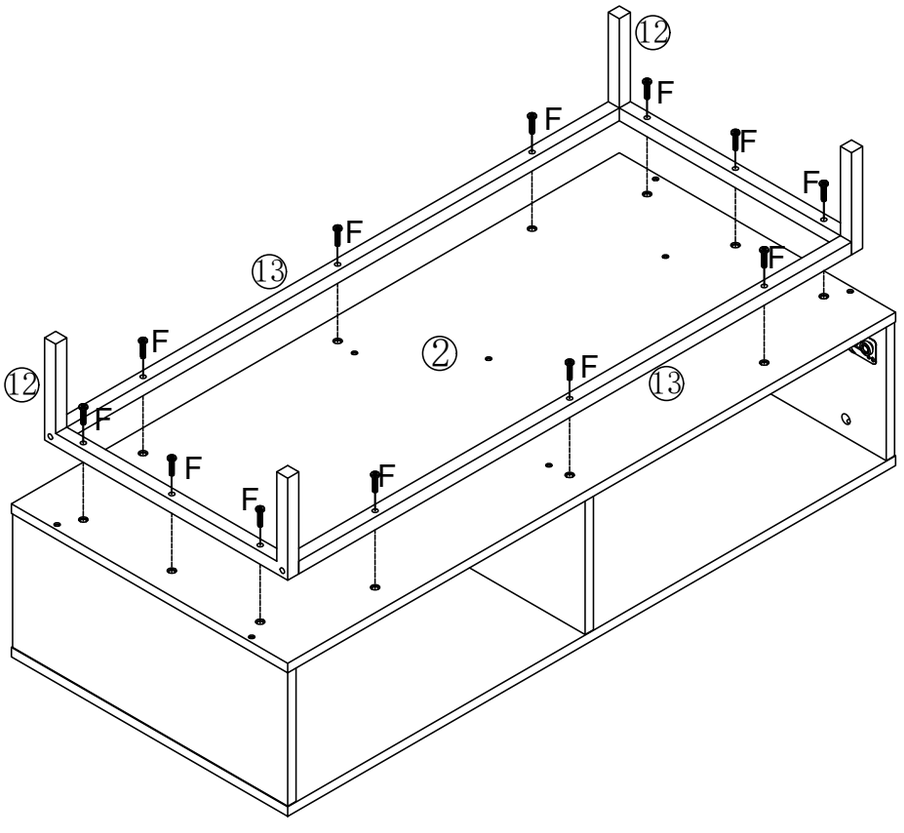

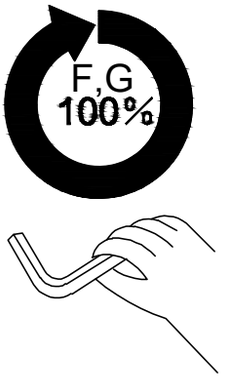

⑦

D	×4
 M4x40MM	

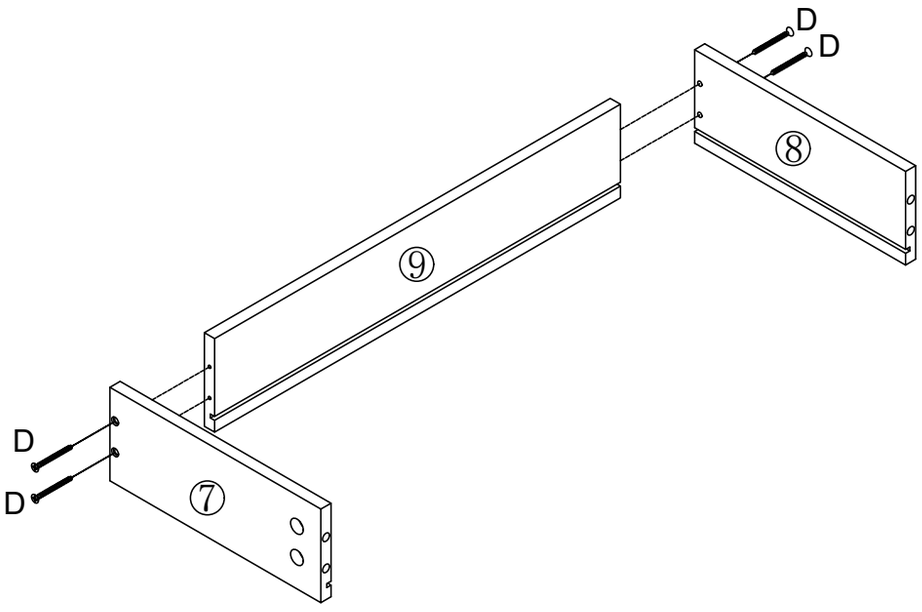

⑧

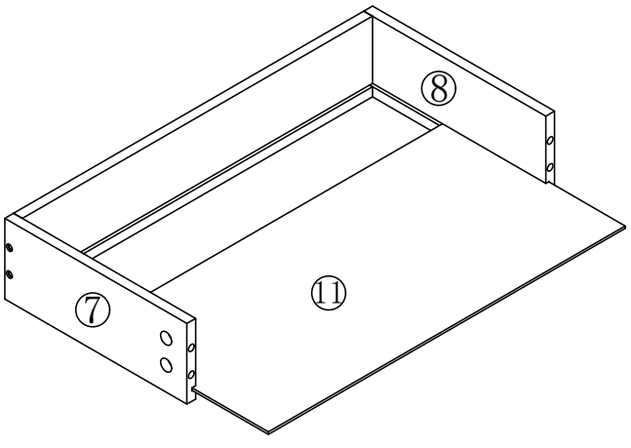

9

A	×4
M6x35MM	

E	×2
M3x12MM	

J	×1

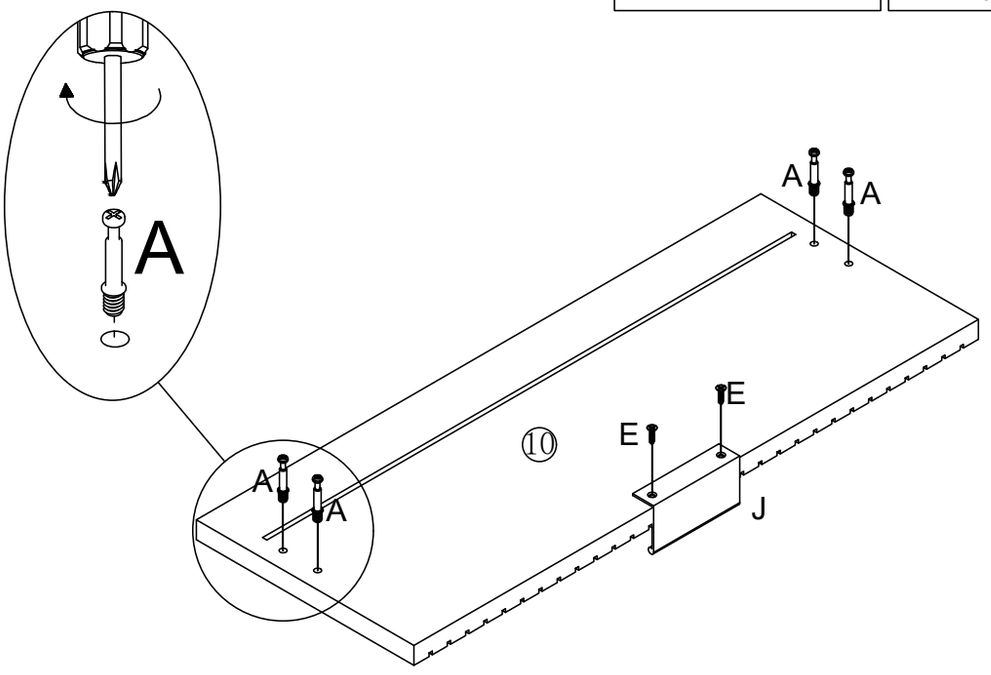

10

B	×4
φ15x10	

I	×4

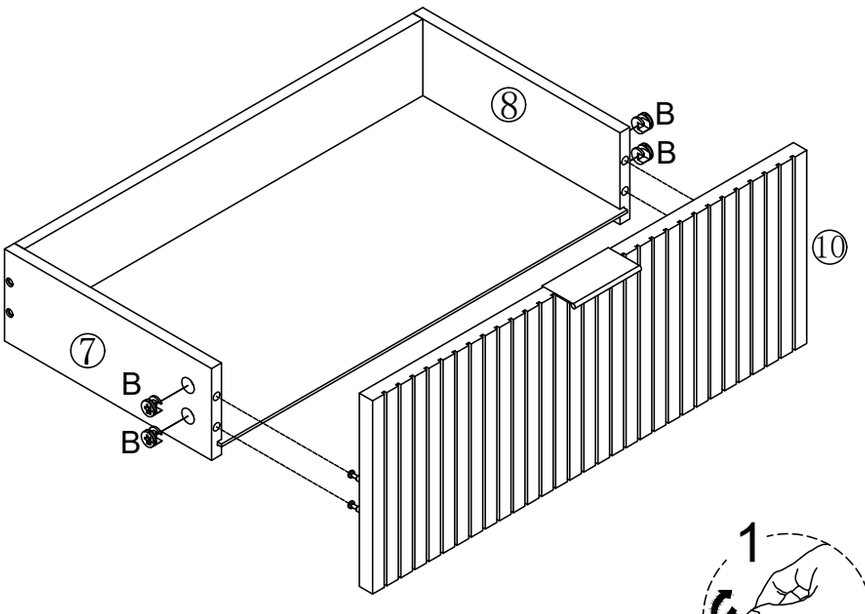

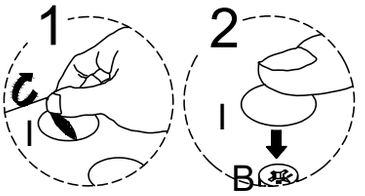

11

E	×4	DL	×1	DR	×1
M3x12MM					

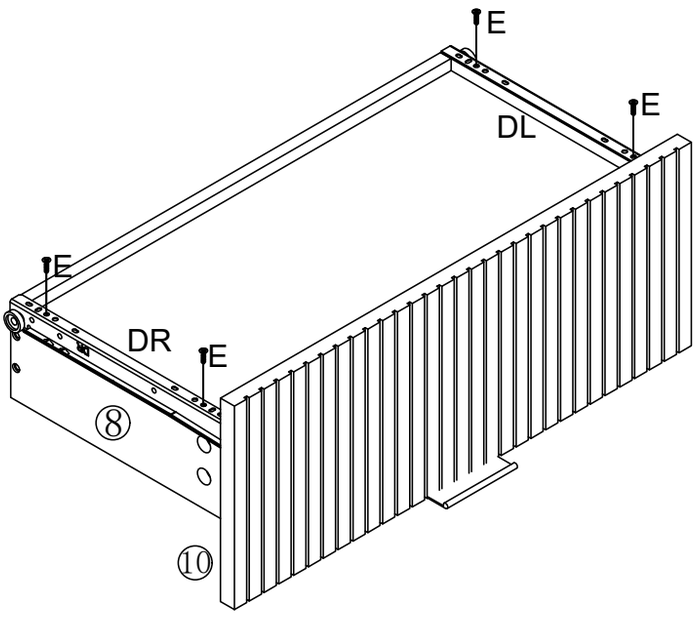

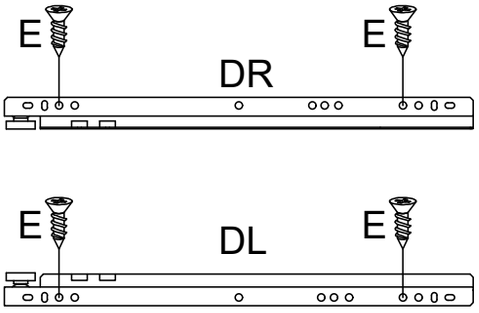

12

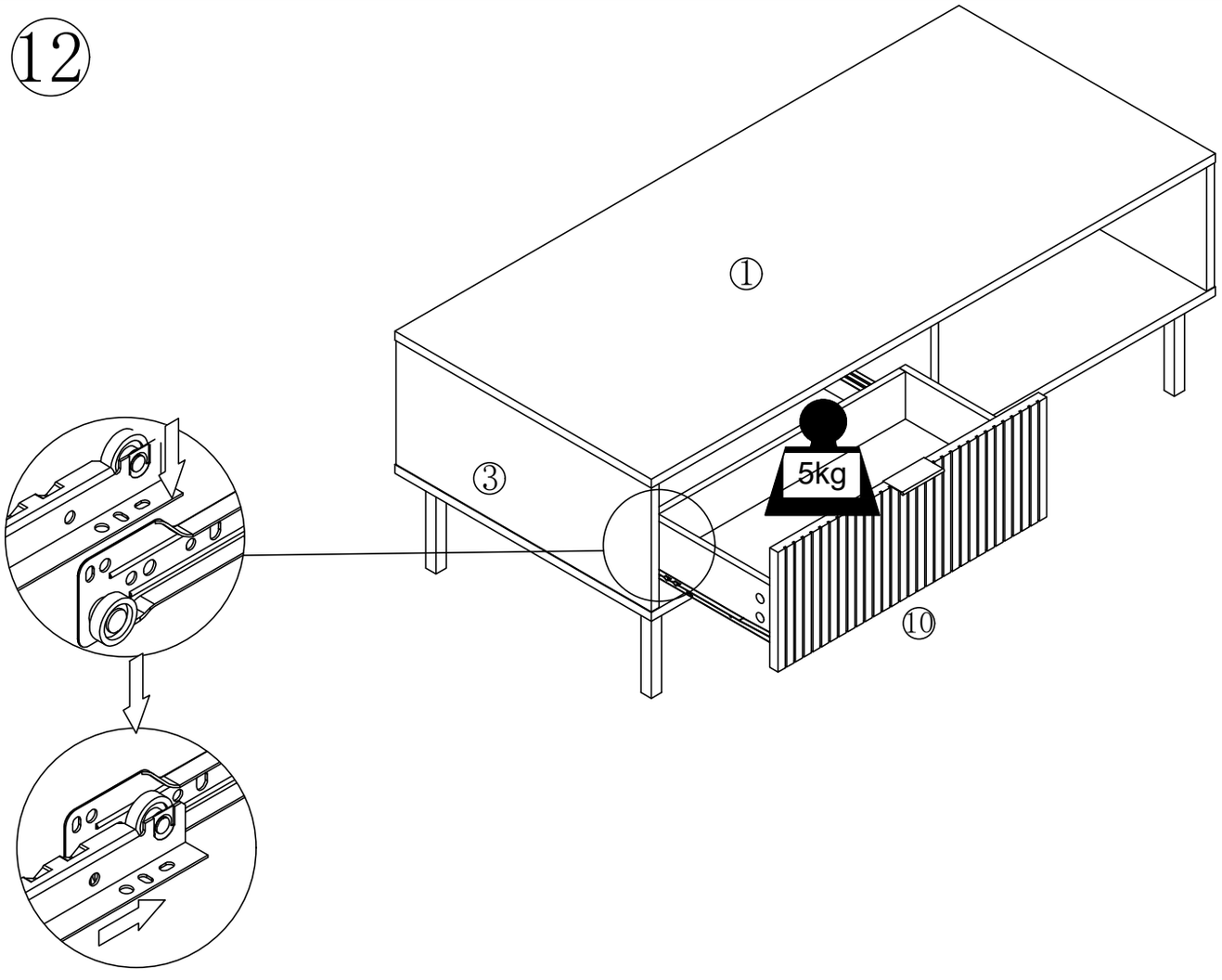

⑬

