Assembly Instructions
BRIGHTON COMPACT BENCH 115 cm

Leg		Backrest		Seat		Bolt - M6*43		Allen Key		
A	2 pcs	B	1 pc	C	1 pc	D	8 pcs	E	1 pc	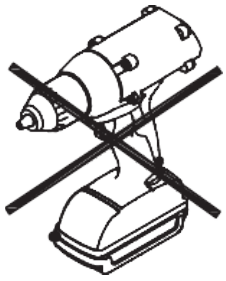

1

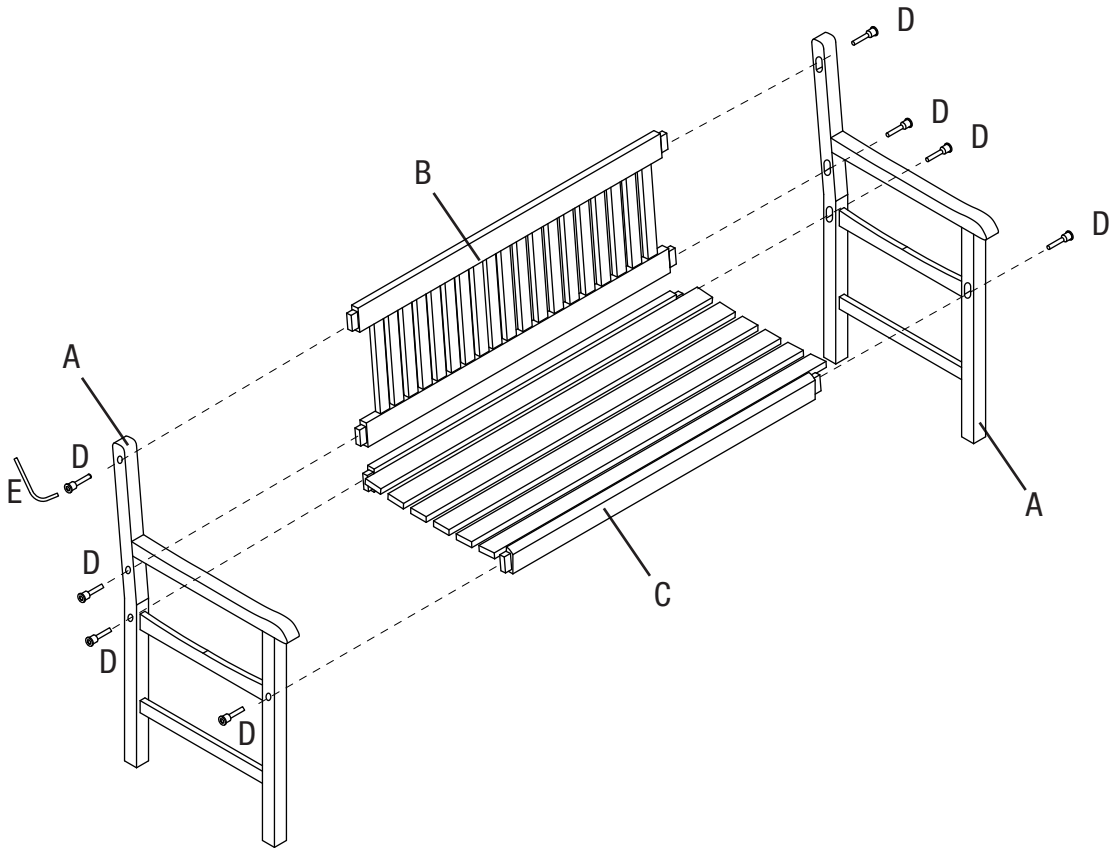

2

