Nature One 12 18 FF 22

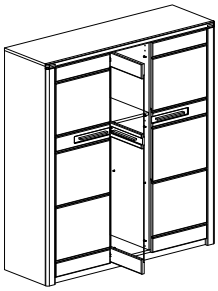

Version **L**

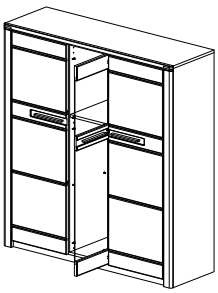

Version **R**

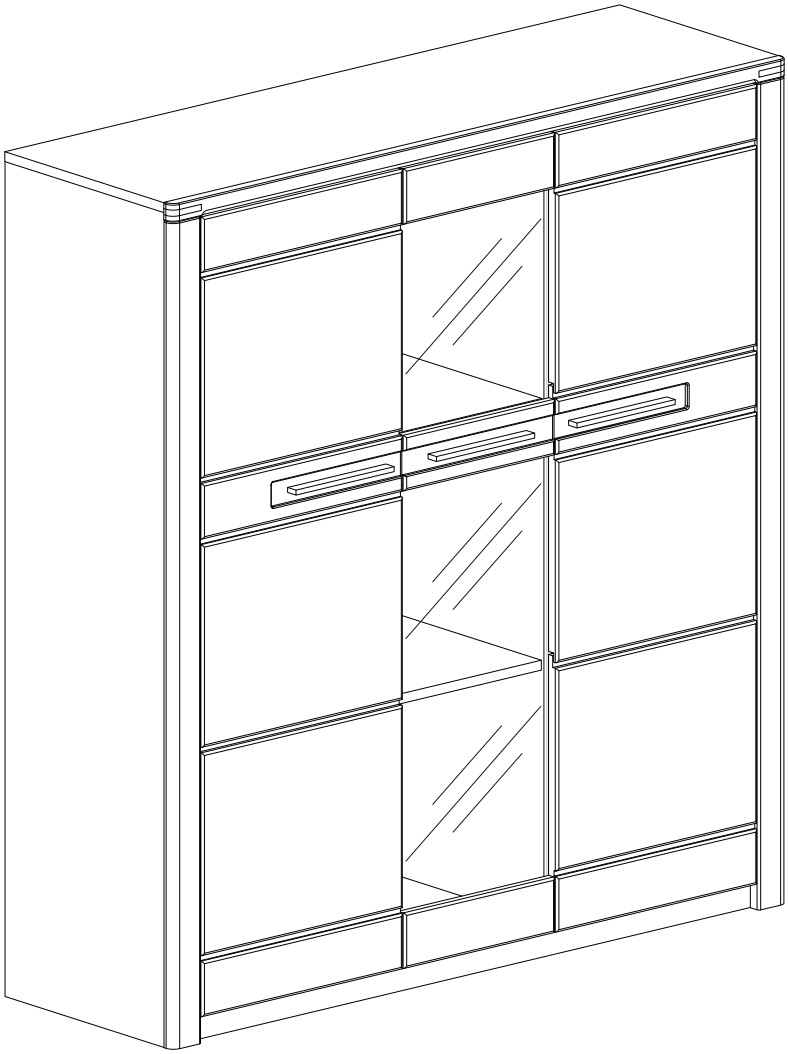

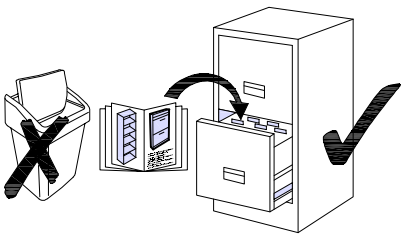

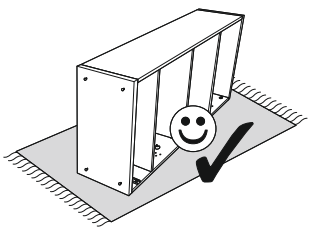

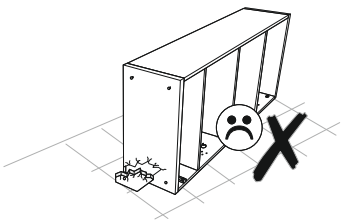

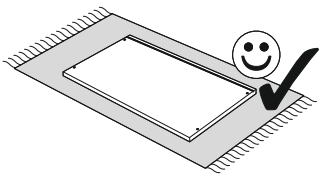

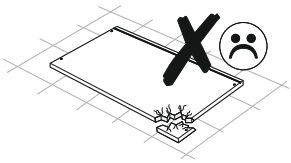

Nature One 12 18 FF 22

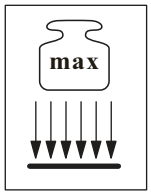

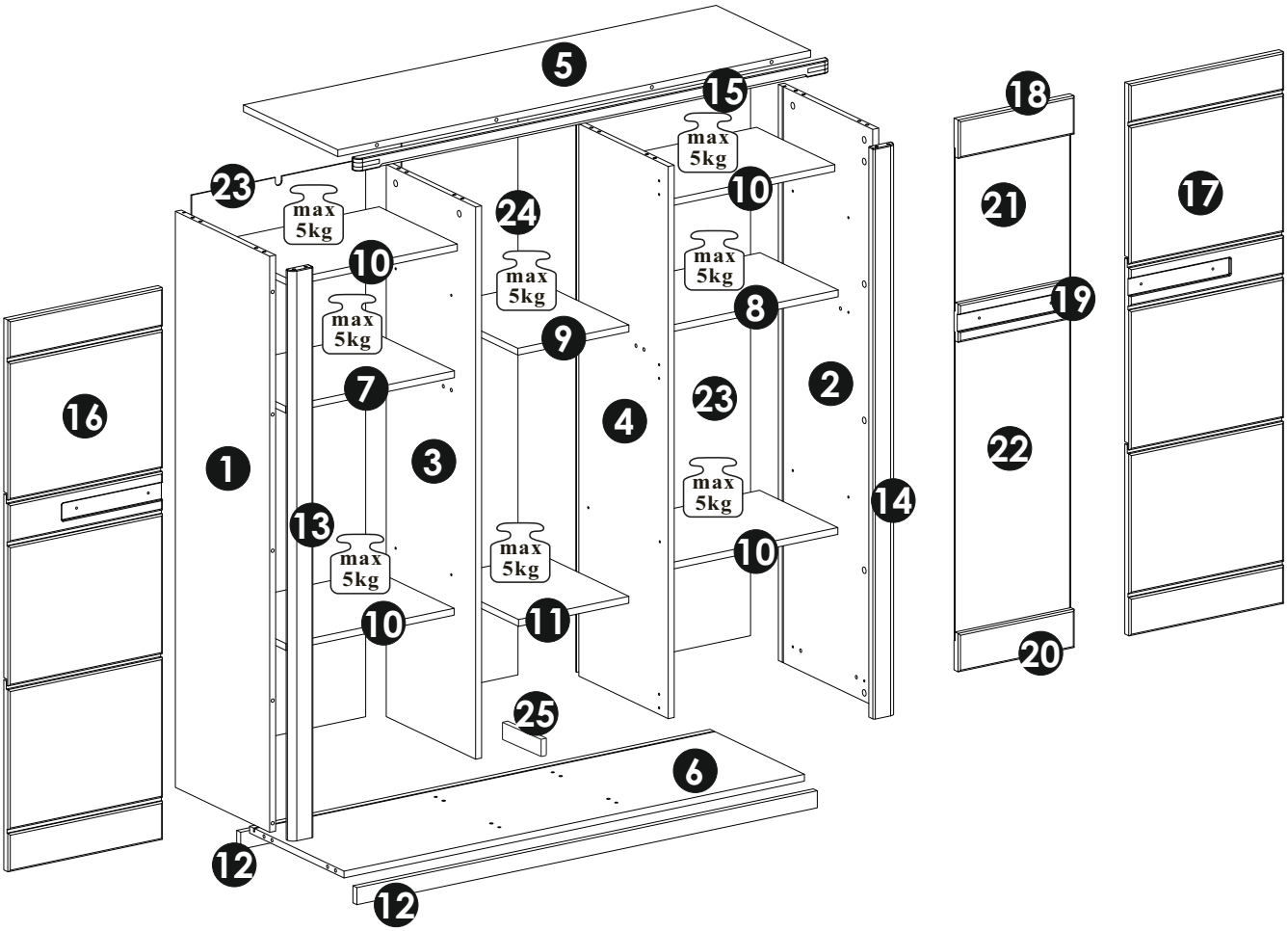

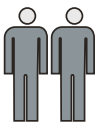

135 min

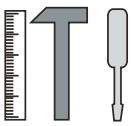

NO	Dim.(mm)			Col.-No	Qty
1	1353	380	16	1/3	1
2	1353	380	16	1/3	1
3	1297	360	16	1/3	1
4	1297	360	16	1/3	1
5	1265	380	16	2/3	1
6	1232	380	16	2/3	1
7	451.5	315	16	2/3	1
8	451.5	315	16	2/3	1
9	295	350	16	2/3	1
10	449.5	315	16	2/3	4
11	295	350	16	2/3	1
12	1232	40	16	1/3	2
13	1340	60	20	3/3	1

NO	Dim.(mm)			Col.-No	Qty
14	1340	60	20	3/3	1
15	1267	30	20	3/3	1
16	1296	413	20	3/3	1
17	1296	413	20	3/3	1
18	310	90	20	3/3	1
19	310	90	20	3/3	1
20	310	90	20	3/3	1
21	309	382	4	3/3	1
22	309	724	4	3/3	1
23	1311	465.5	3	1/3	2
24	1311	311	3	1/3	1
25	346	40	16	2/3	1
A				1/3	1

Nature One 12 18 FF 22

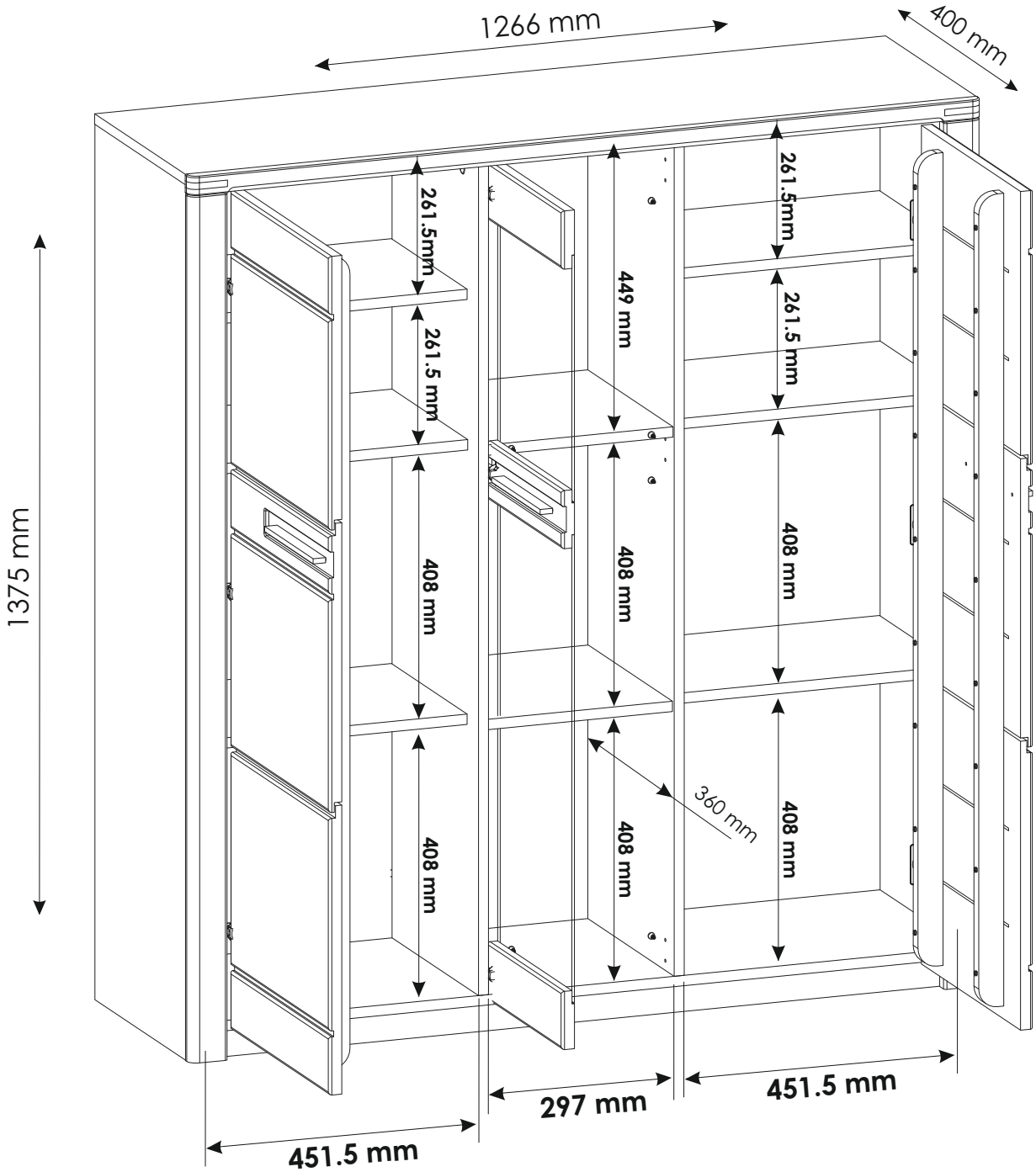

Nature One 12 18 FF 22

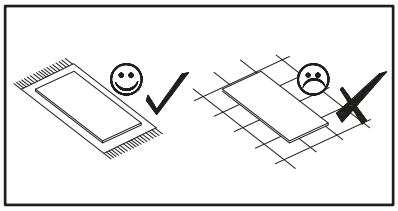

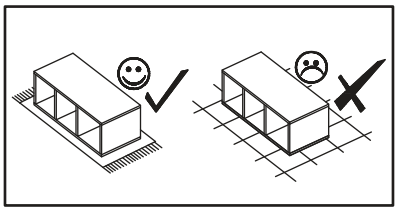

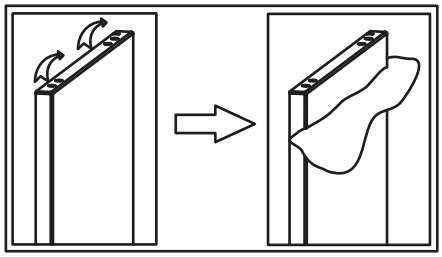

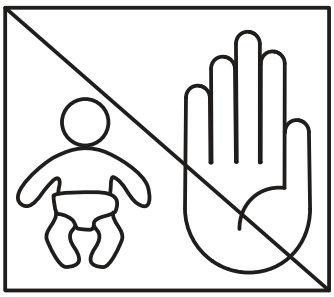

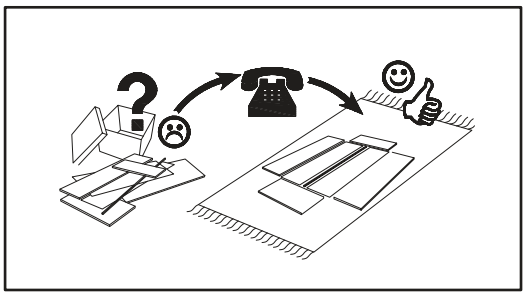

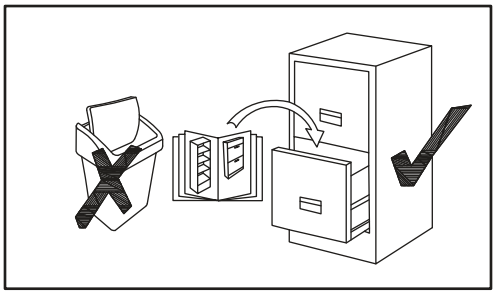

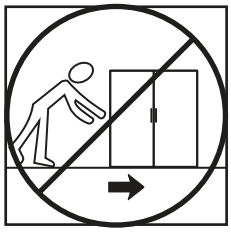

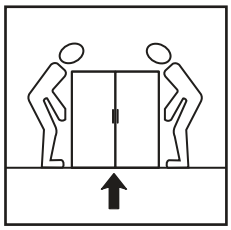

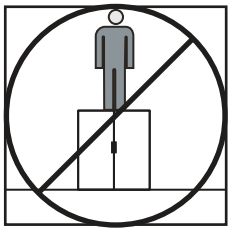

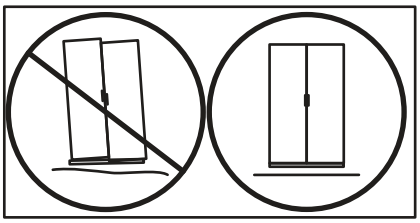

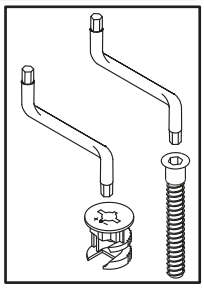

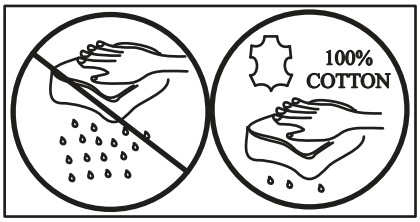

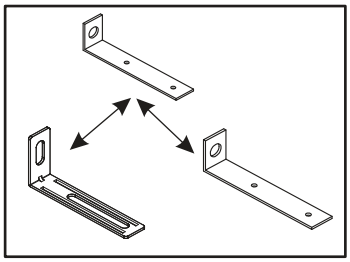

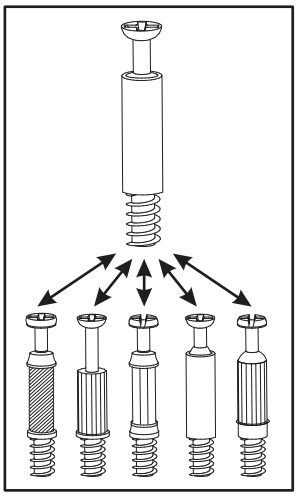

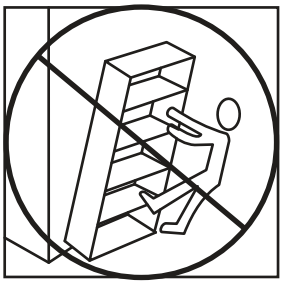

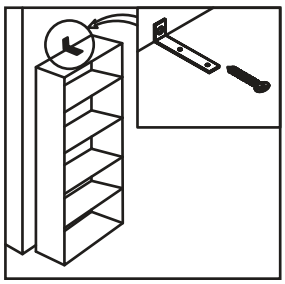

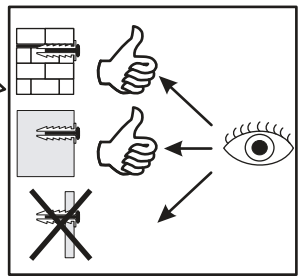

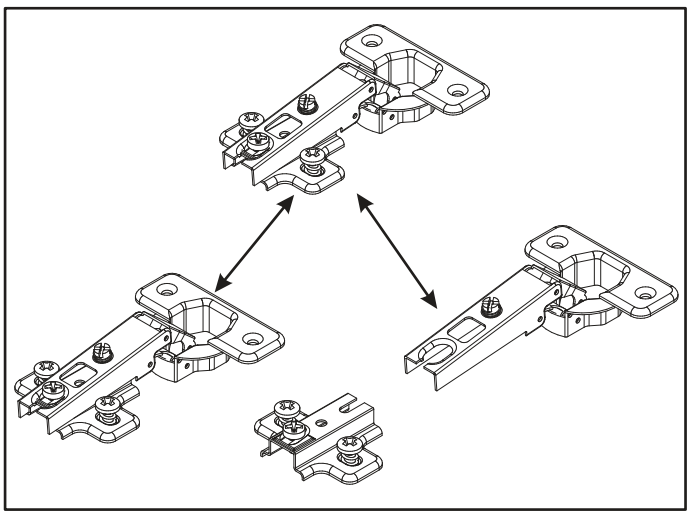

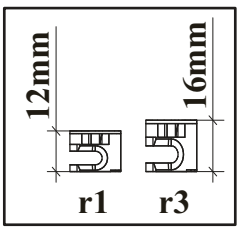

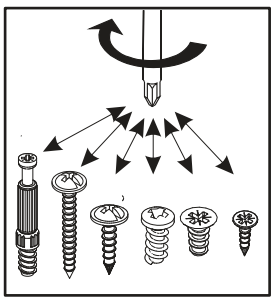

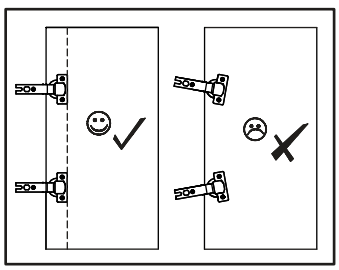

Nature One 12 18 FF 22

A1

f1 ϕ8x30 mm x28	r16 x34	r1 x34	e1 ϕ6.5x50 mm x4	t17 ϕ8x50 mm x2	z1 x1	s2 x34
k1 x8	n14 x2	n6 x14	n22 x3	p4 ϕ3.5x16 mm x22	l9 x8	d1 ϕ5x17 mm x24
o21 x6	l2 x12	o27 x8	p1 ϕ3.5x13 mm x50	j2 M4x20 mm x6		

A2

c28 192 mm x3	

A3

b6 x6	a6 ϕ35 mm x6	e2 ϕ6.3x13 mm x18
b8 x3	a8 ϕ26 mm x3	

A4

Z3 x2	Y10 x1

0 mm 10 20 30 40 50 60

Nature One 12 18 FF 22

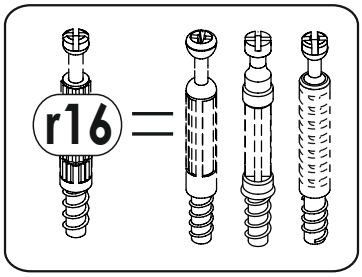

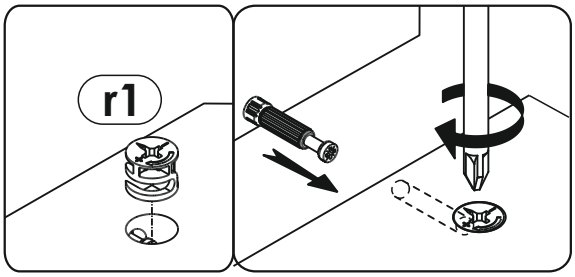

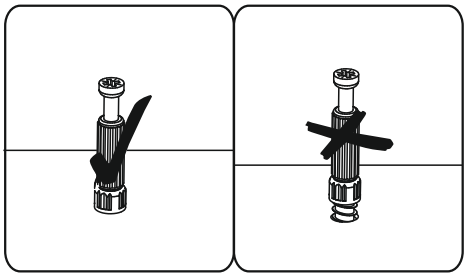

1	f1 ϕ8x30 mm x4	r16 x16	r1 x18

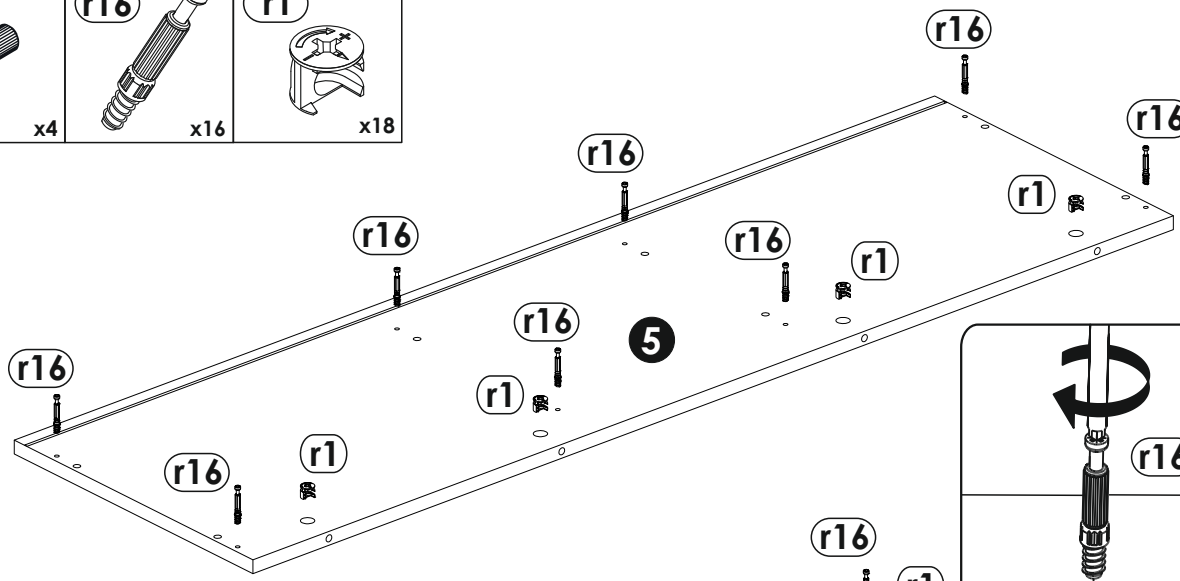

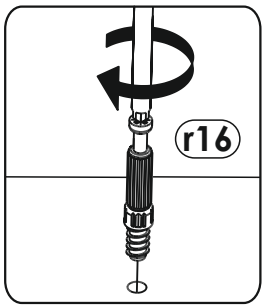

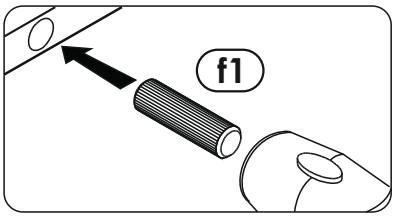

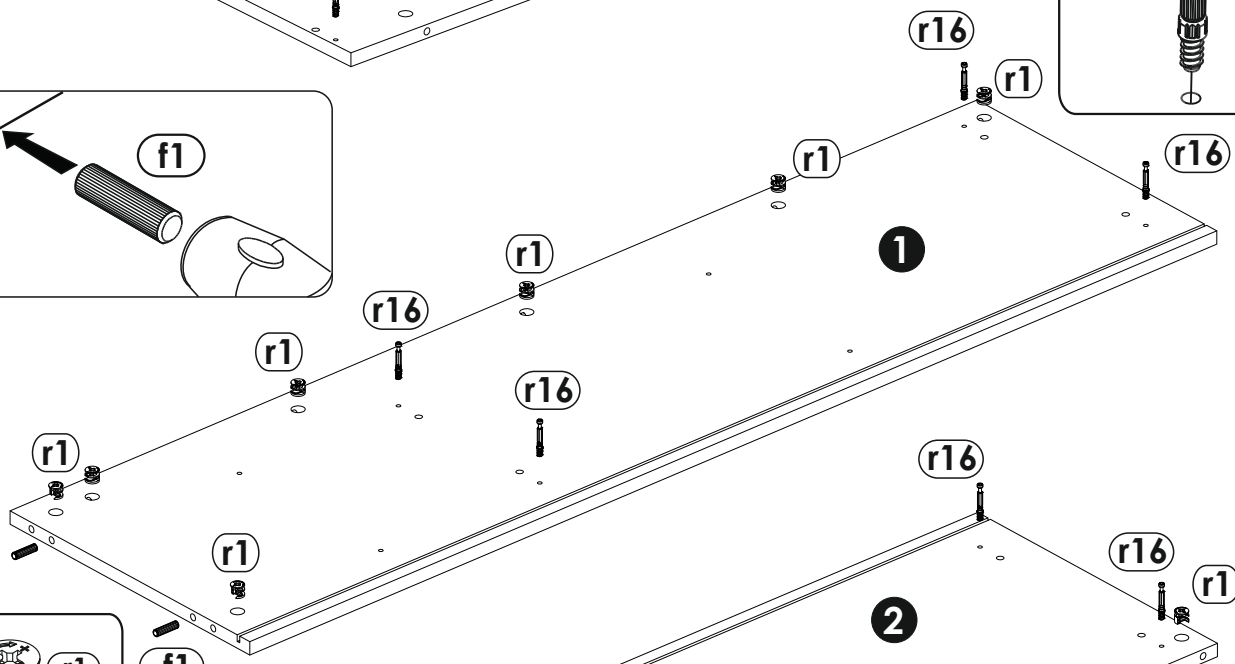

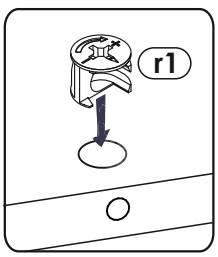

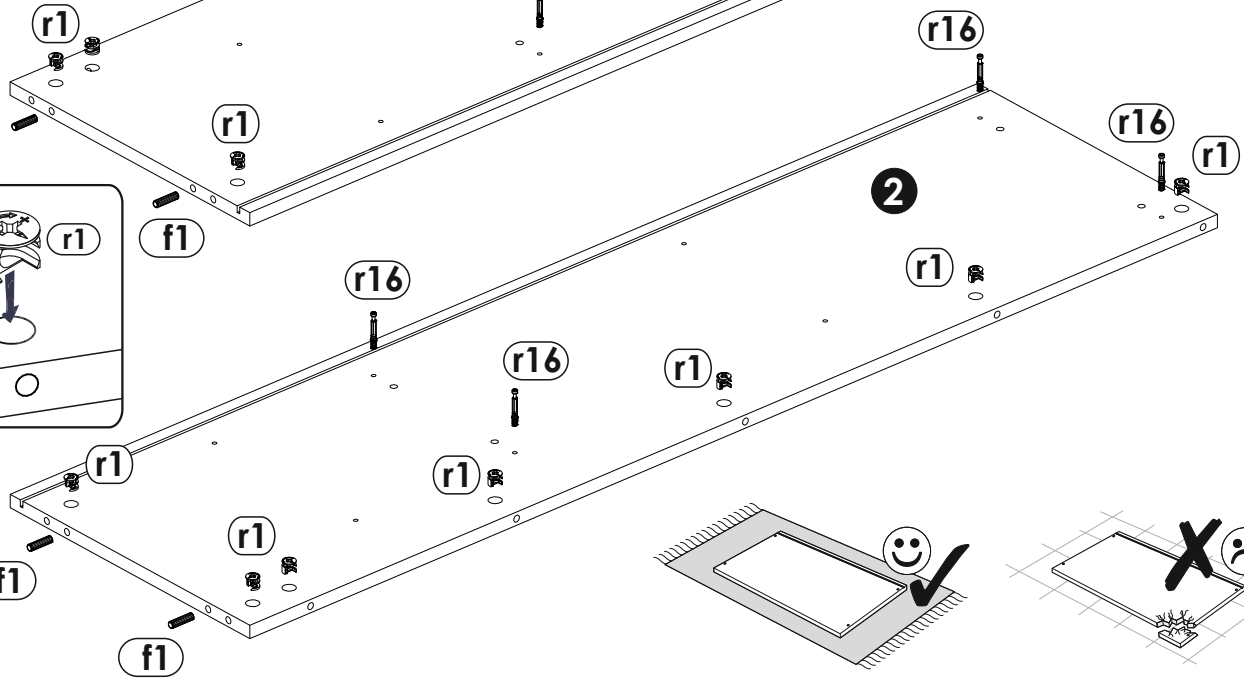

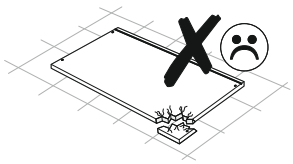

Nature One 12 18 FF 22

2	f1	r1	r16
	ϕ8x30 mm x12	x8	x4

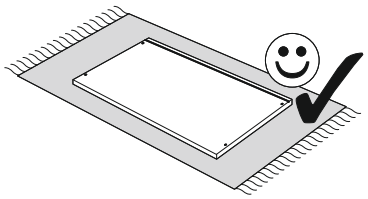

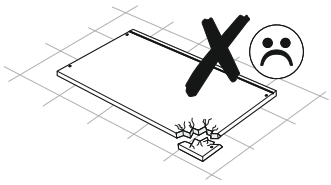

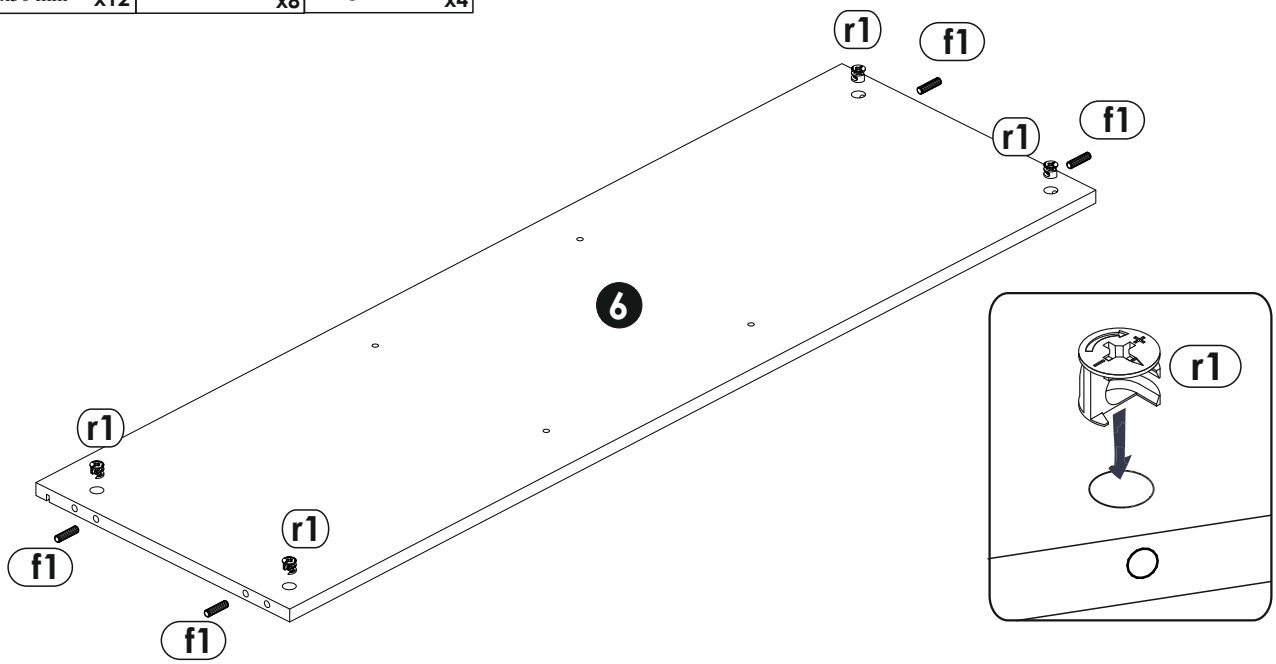

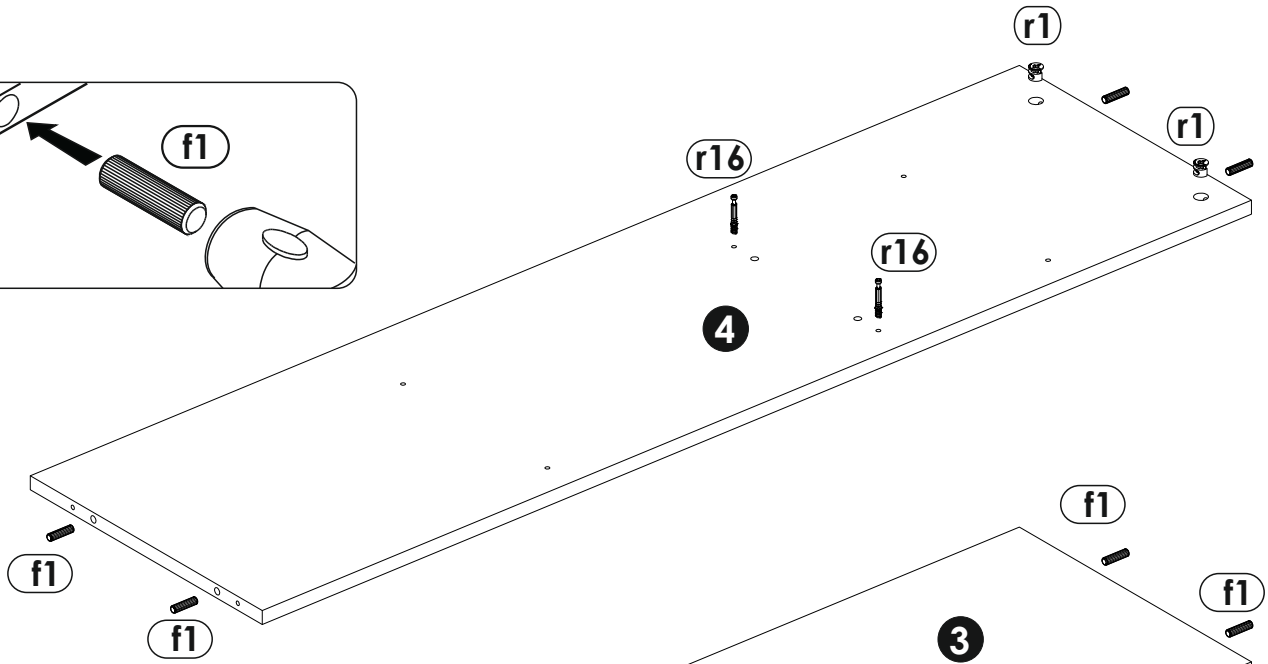

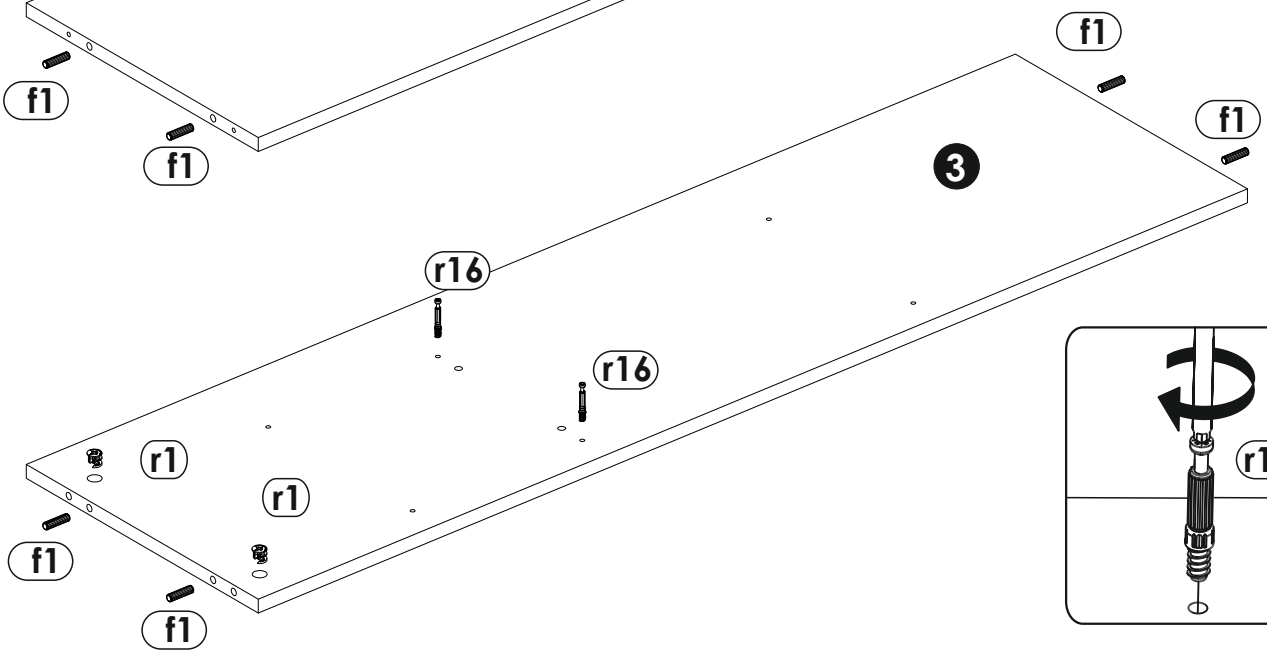

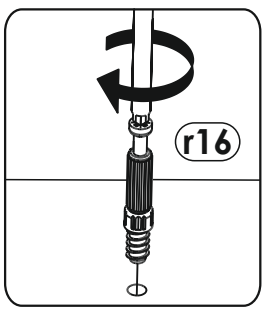

Nature One 12 18 FF 22

3	f1 ϕ8x30 mm x8	r1 x8

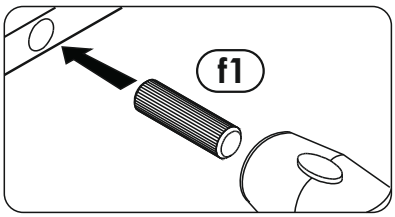

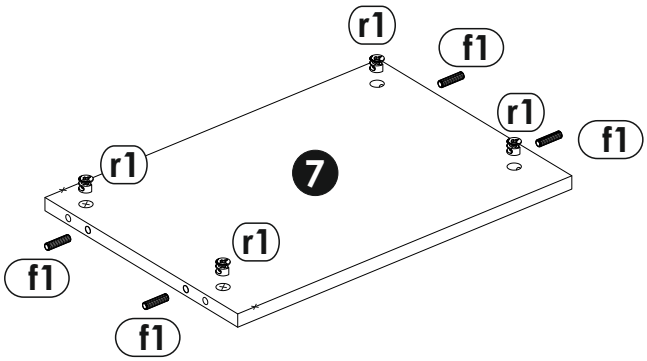

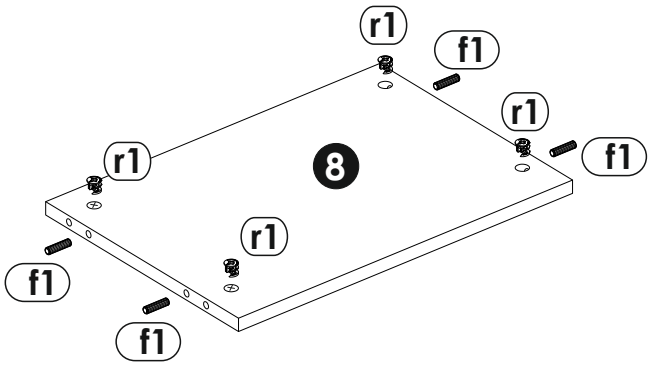

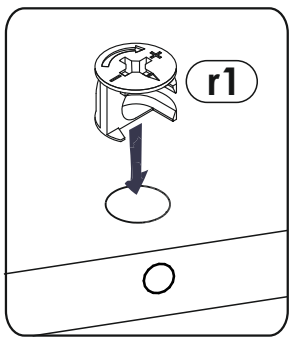

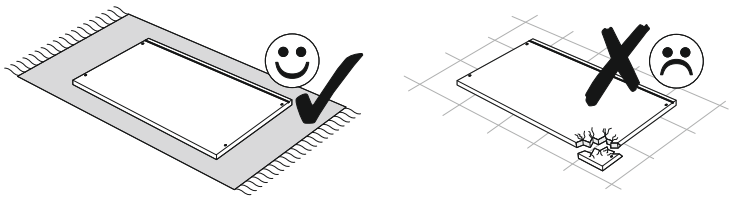

Nature One 12 18 FF 22

4	e2	b6	r16	f1
	ϕ6.3x13 mm x12	x6	x13	ϕ8x30 mm x4

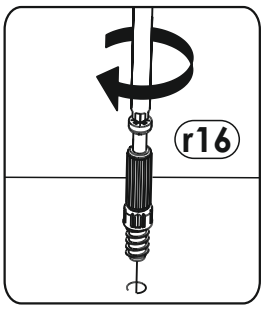

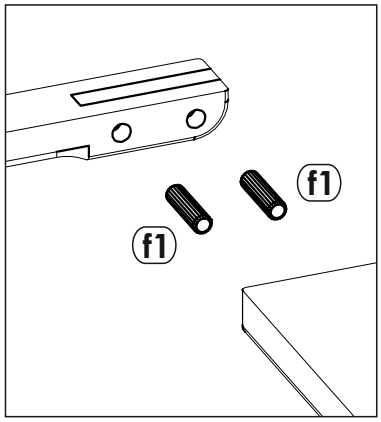

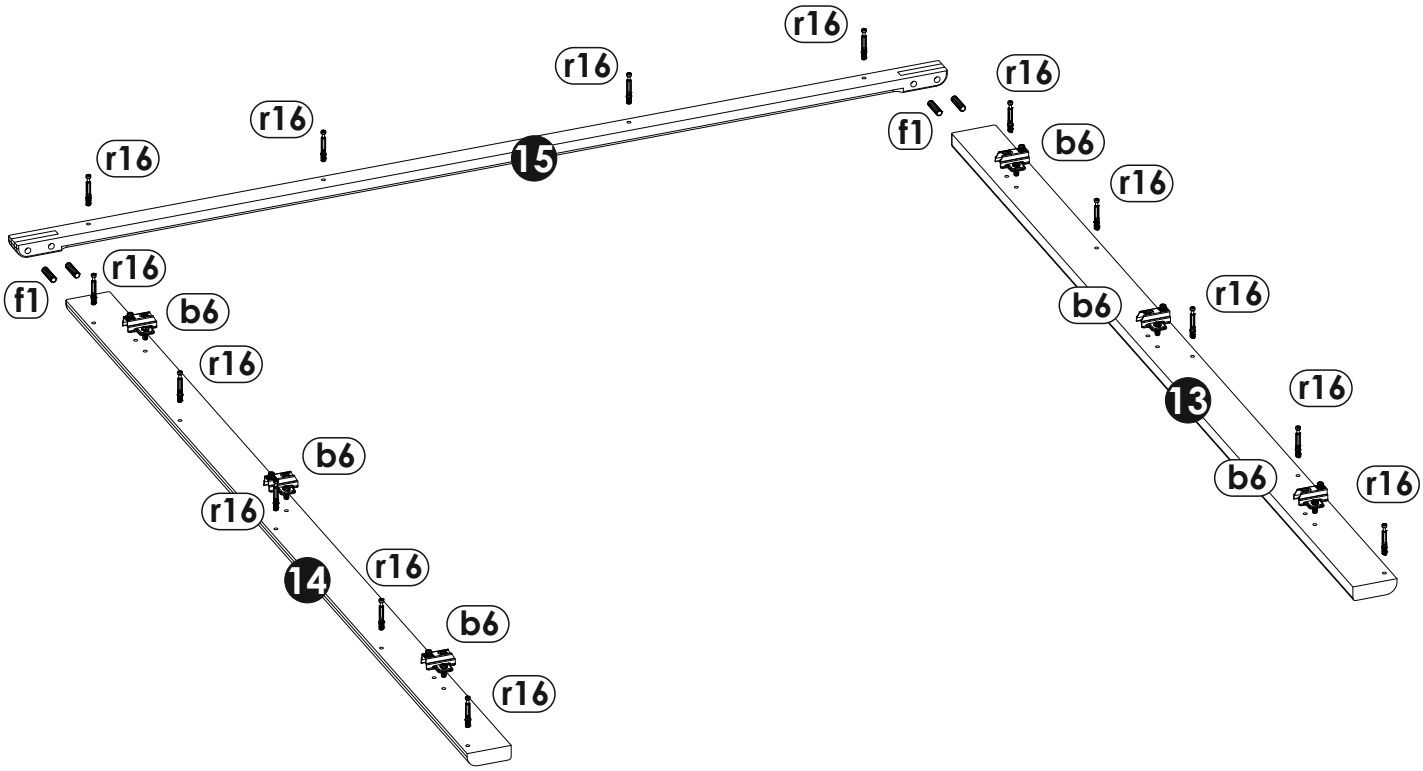

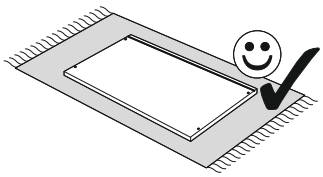

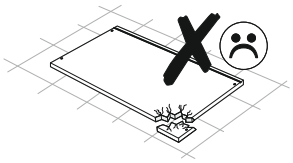

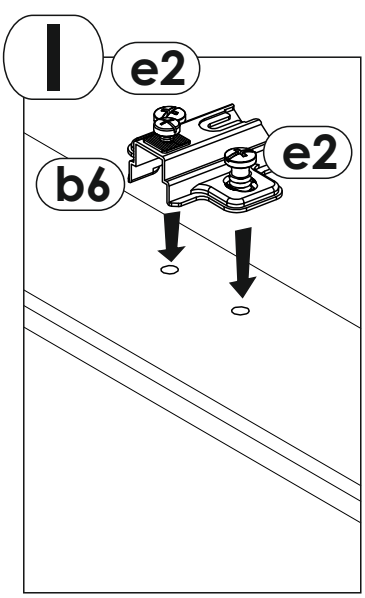

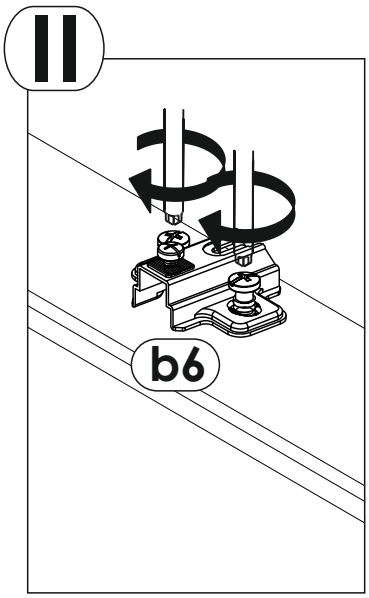

Nature One 12 18 FF 22

5	p1 ϕ3.5x13 mm x12	a6 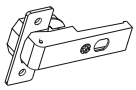 x6

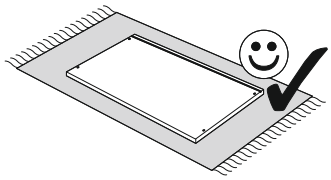

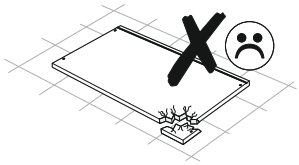

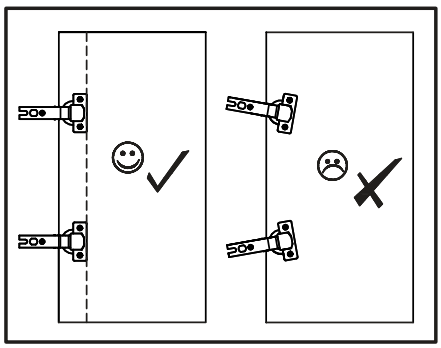

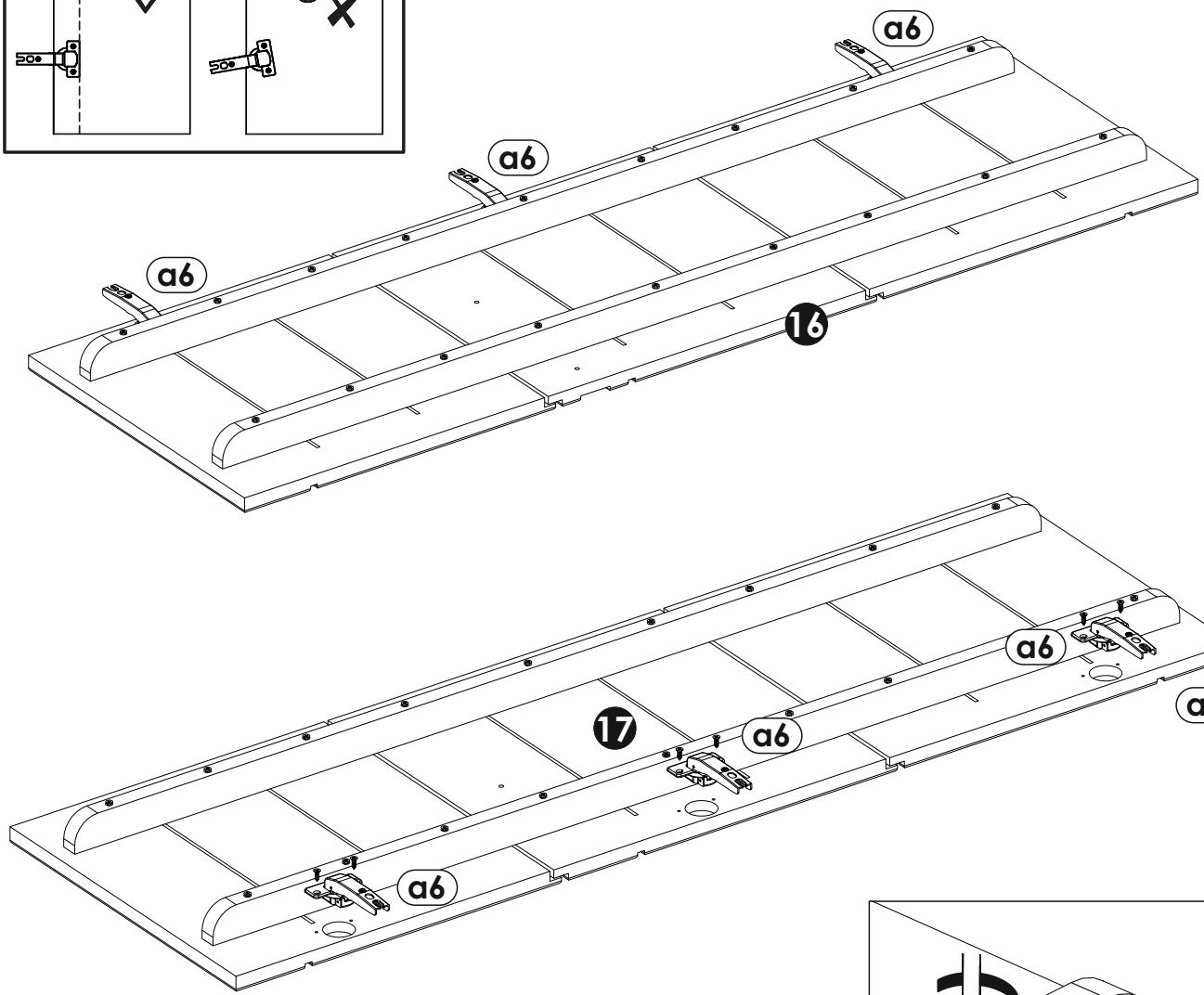

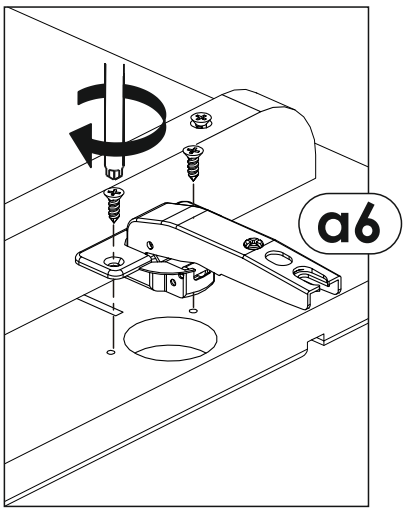

Nature One 12 18 FF 22

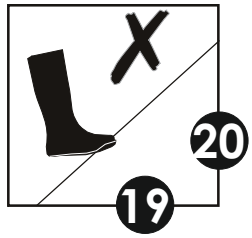

6	p1	a2	p3	o27
	ϕ3.5x13 mm x6	x3	ϕ3.5x16 mm x8	x8

Version **L**

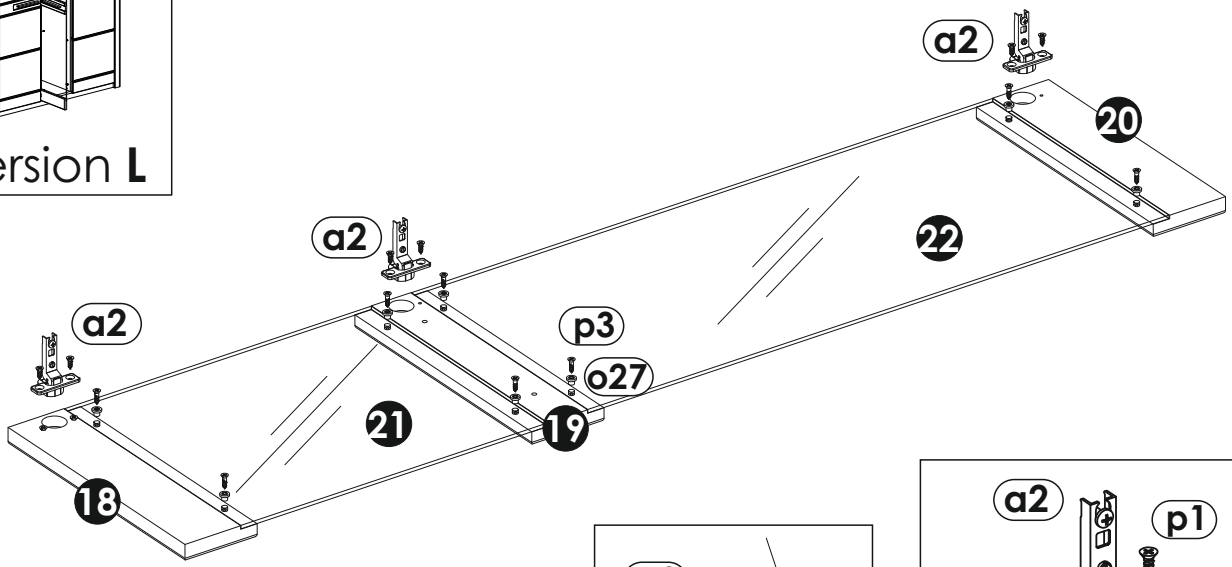

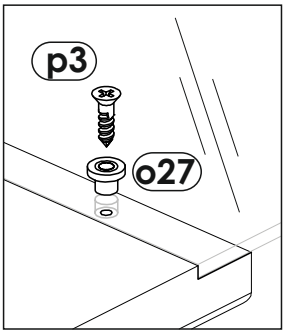

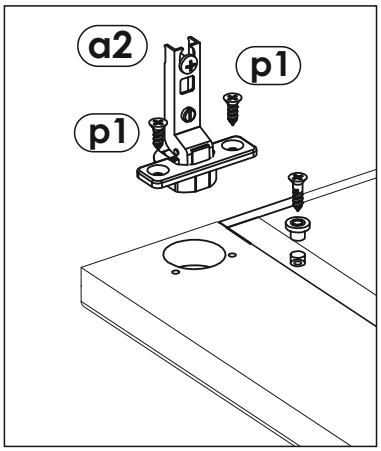

6	p1	a8
	ϕ3.5x13 mm x6	x3

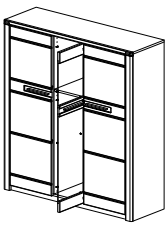

Version **R**

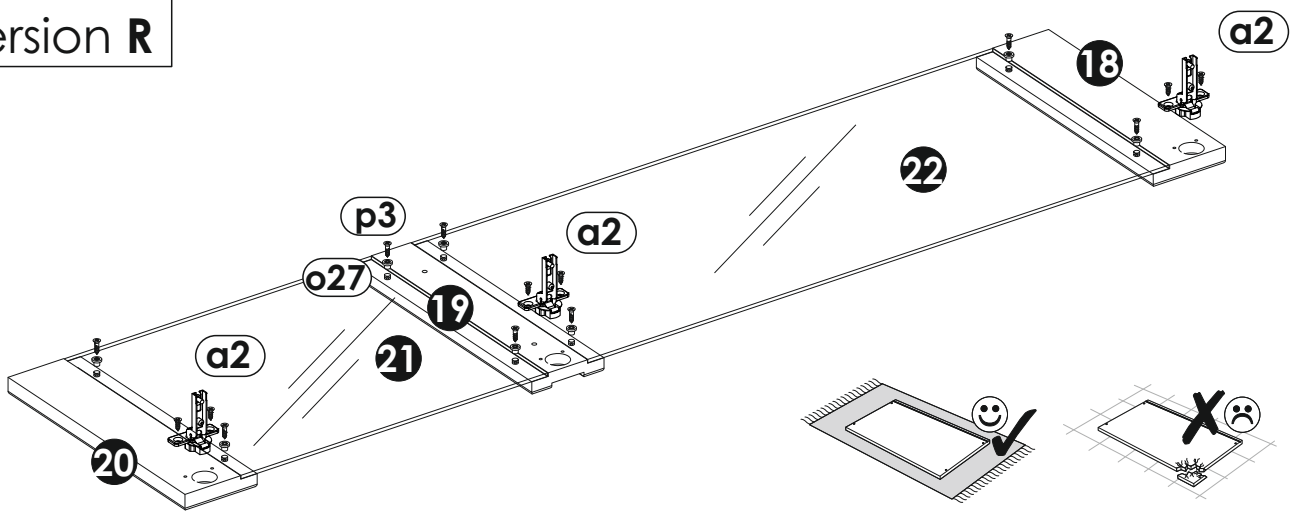

Nature One 12 18 FF 22

7

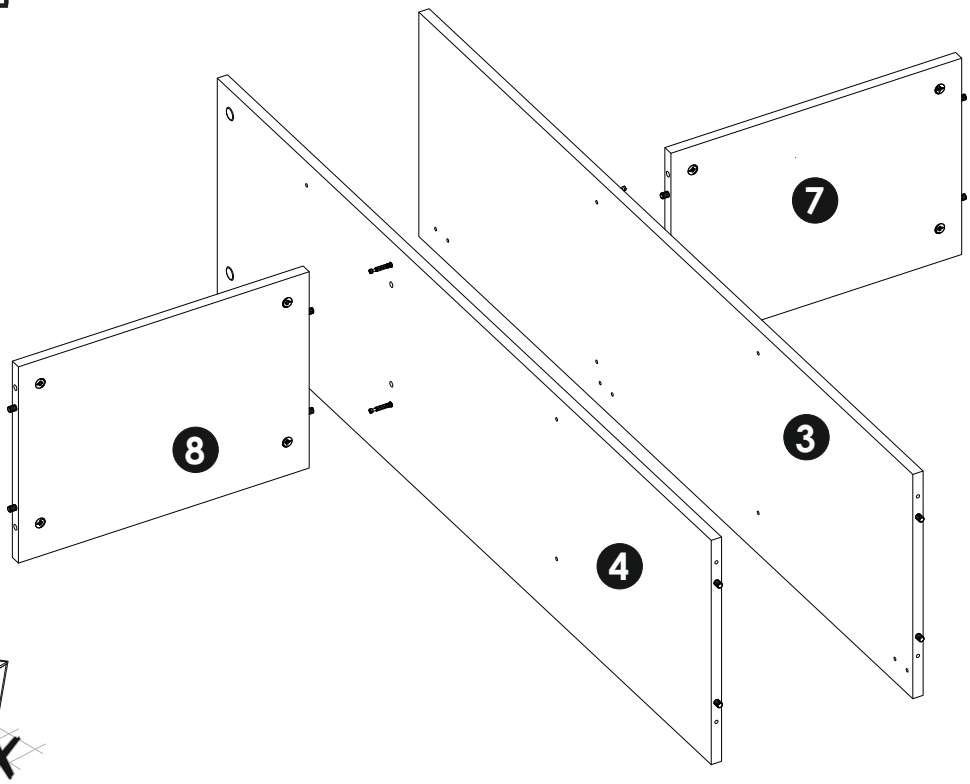

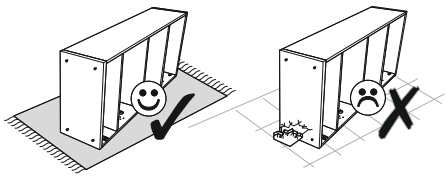

8

	e1 ϕ6.5x50 mm x4	z1 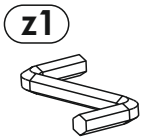 x1

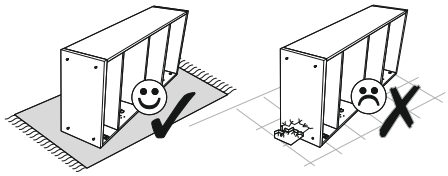

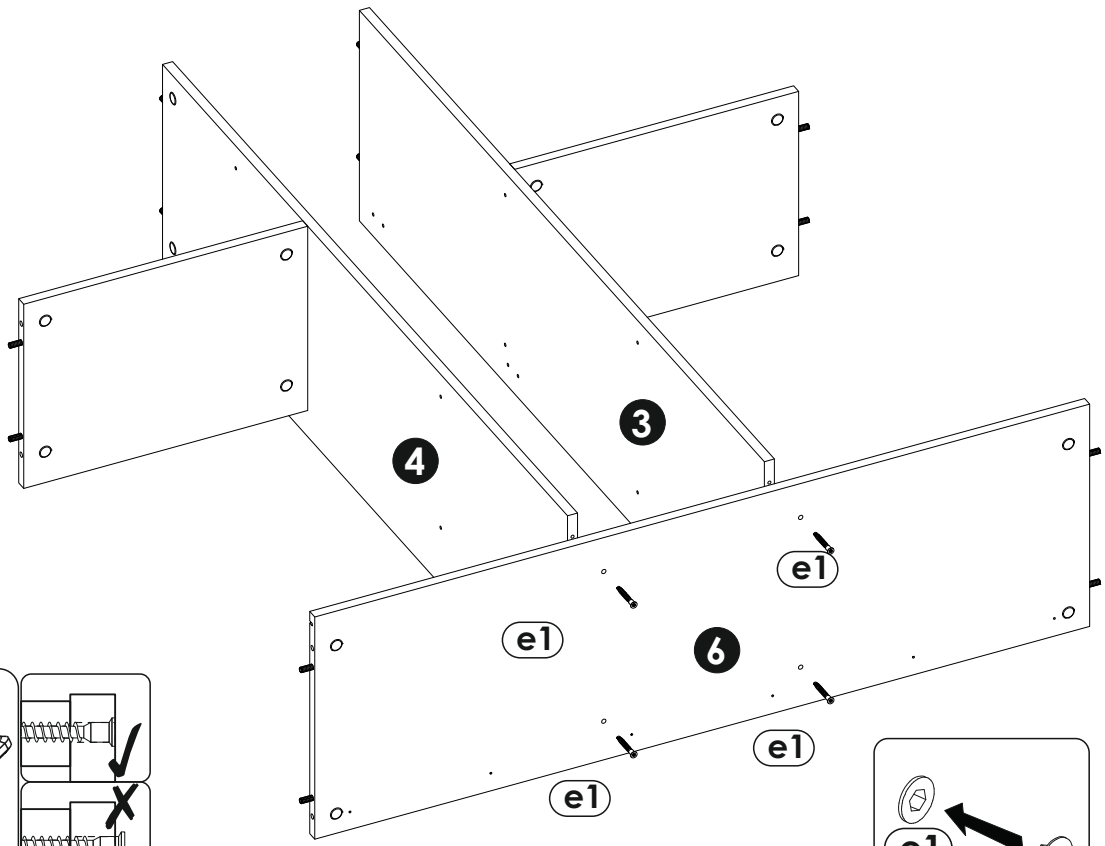

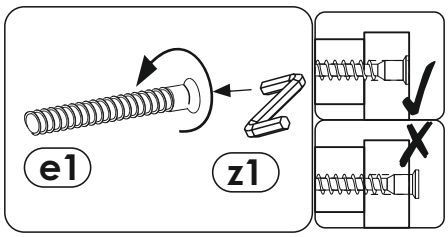

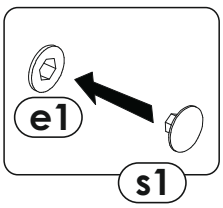

Nature One 12 18 FF 22

9

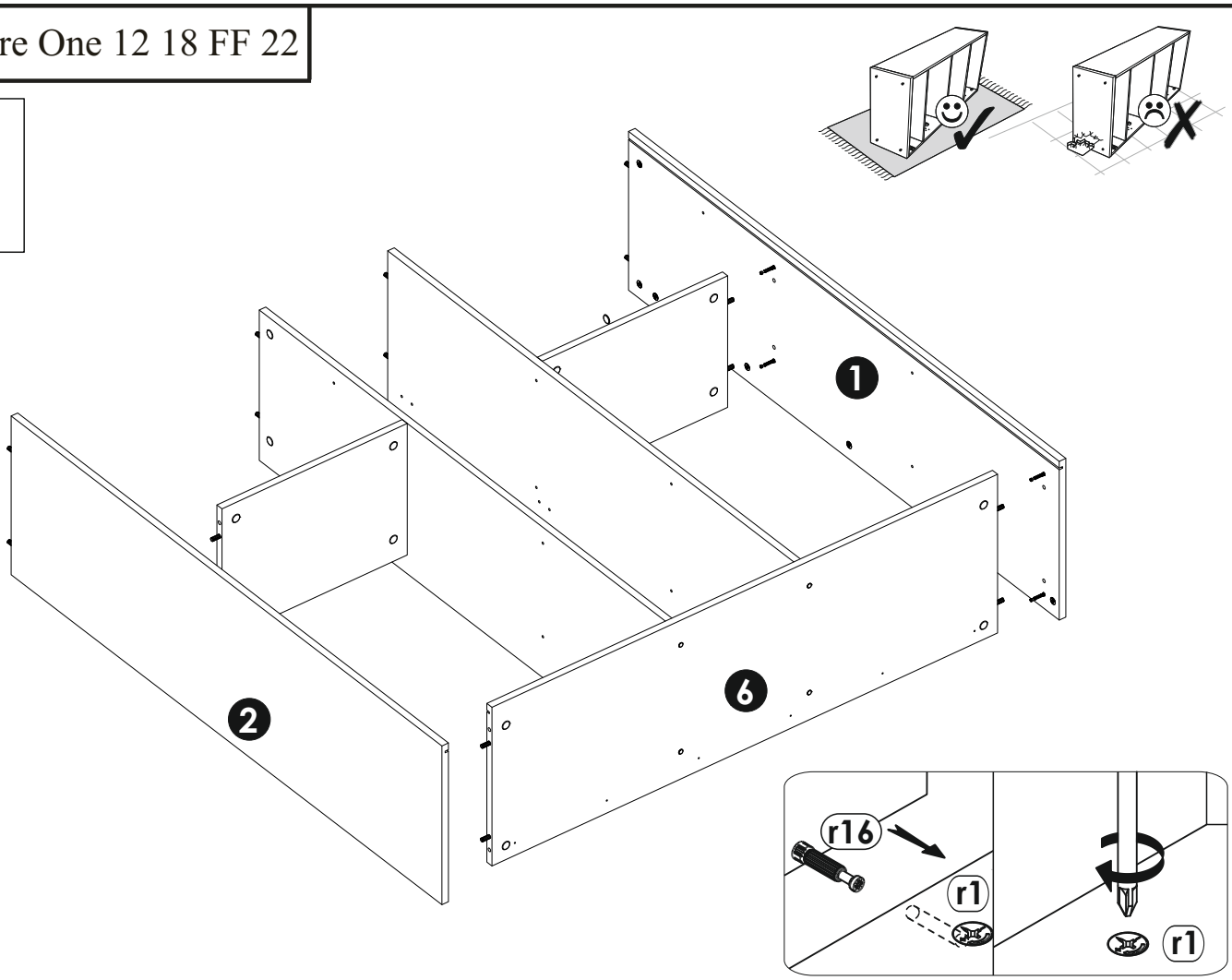

10

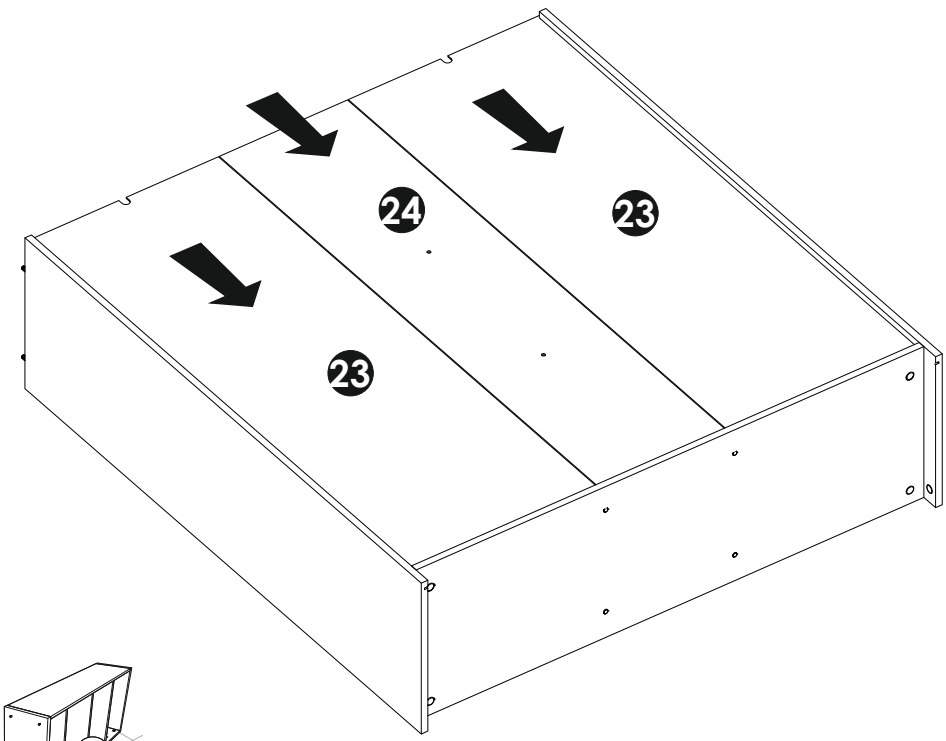

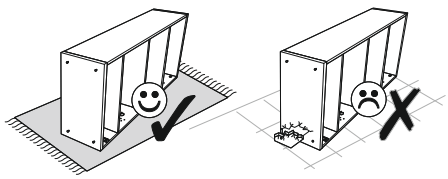

Nature One 12 18 FF 22

11

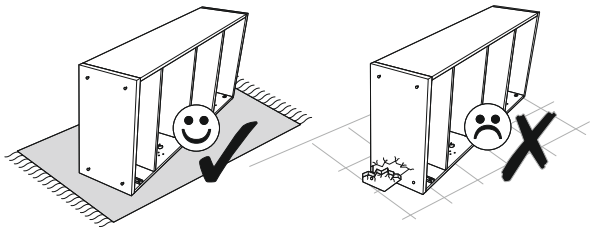

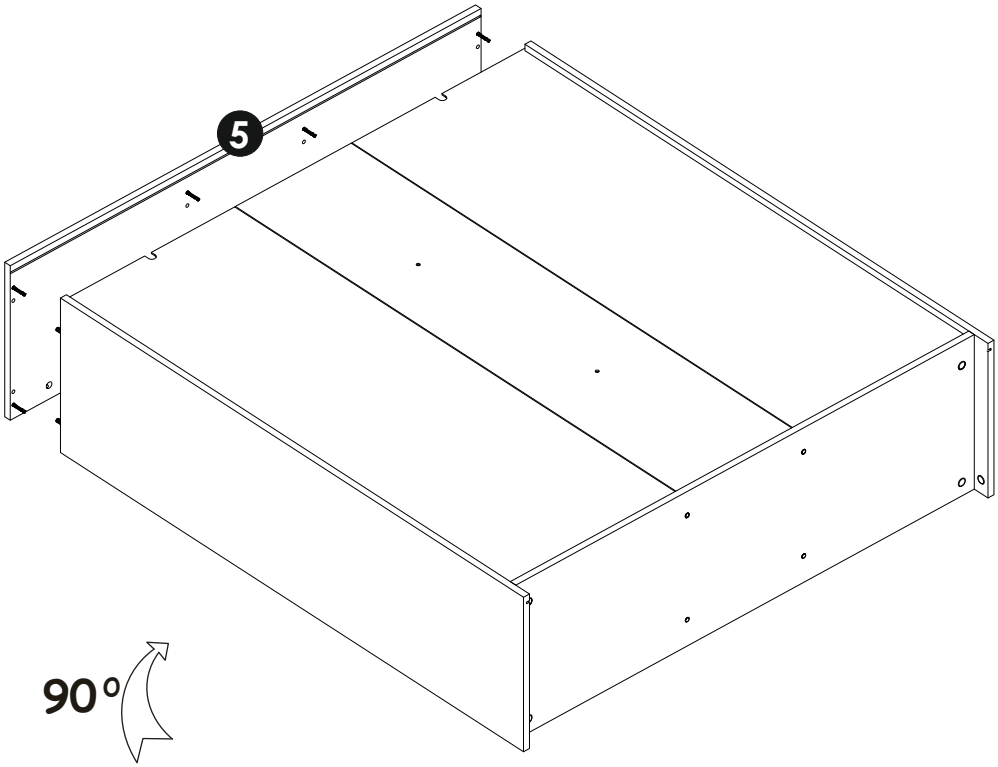

12

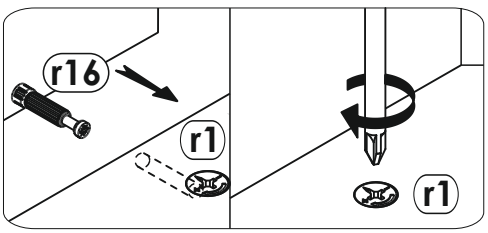

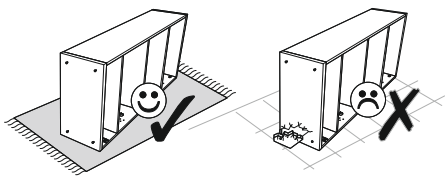

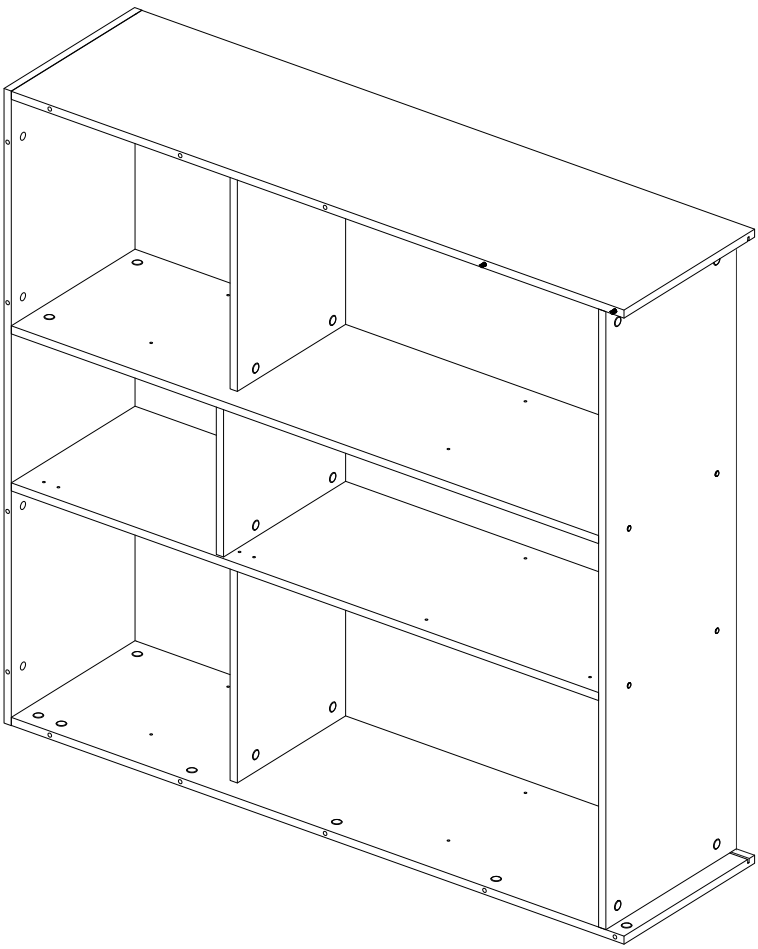

Nature One 12 18 FF 22

13	l2 x12	p1 ϕ3.5x13 mm x16	n6 x6
	p4 ϕ3.5x16 mm x8	l9 x8	

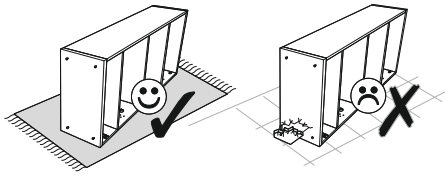

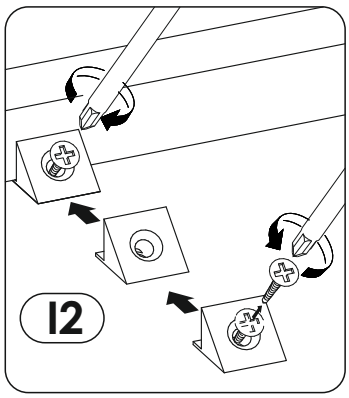

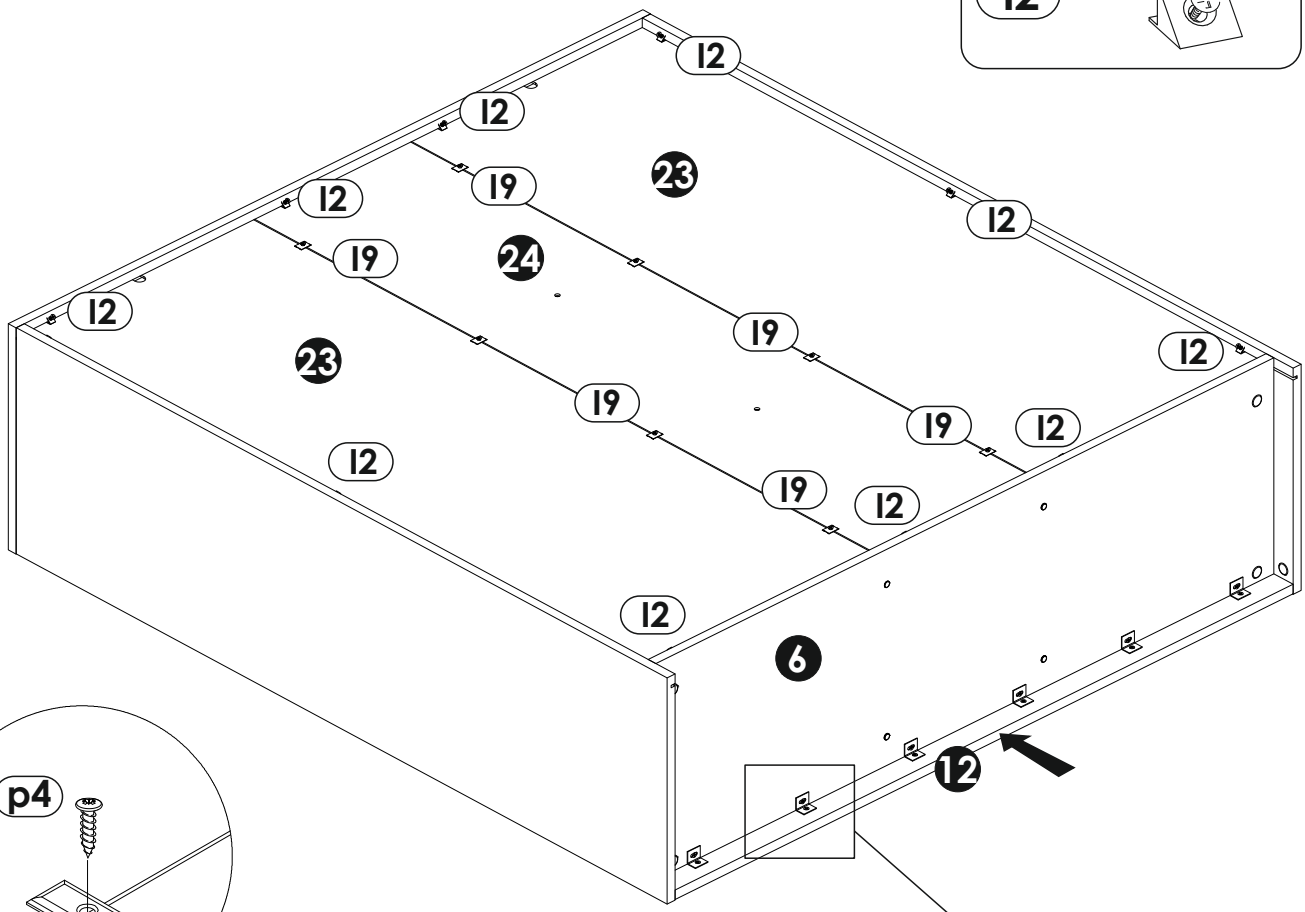

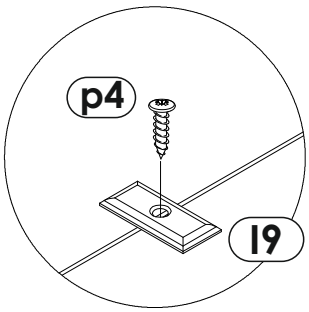

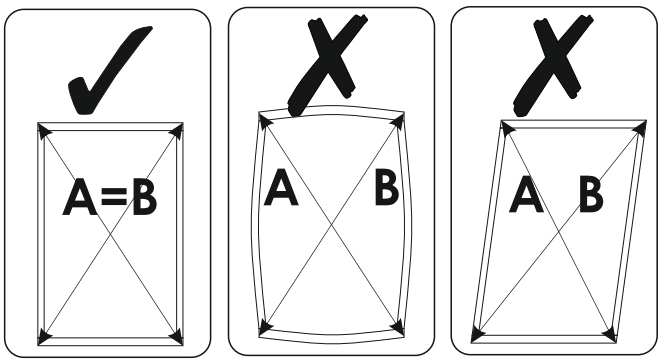

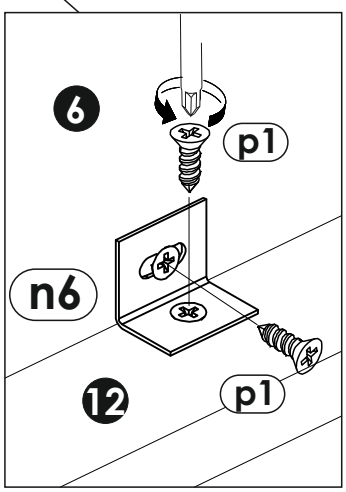

Nature One 12 18 FF 22

14	p1	n6	k1
	ϕ3.5x13 mm x16	x8	x8

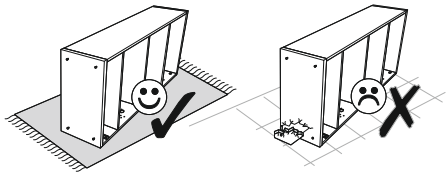

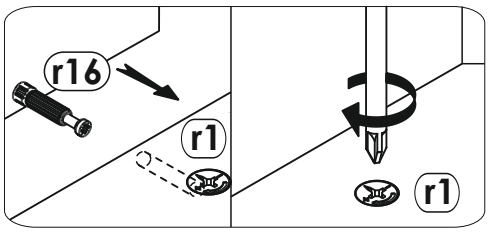

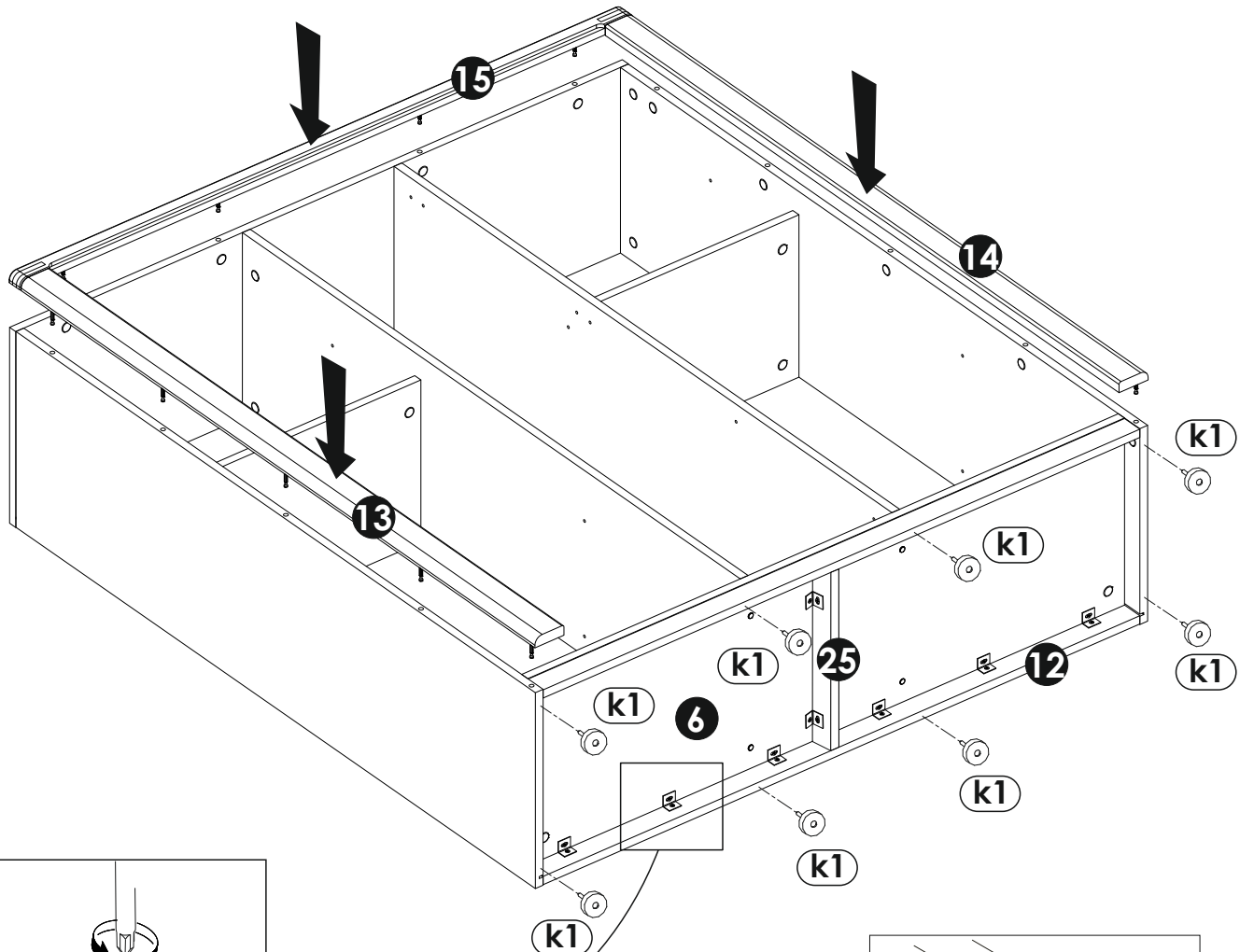

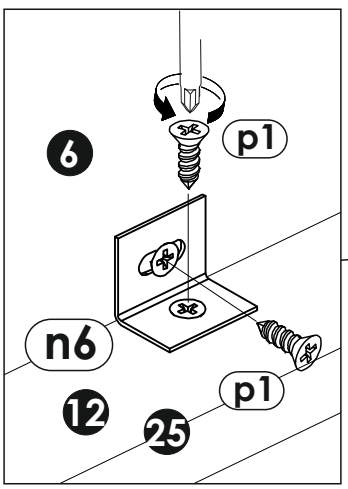

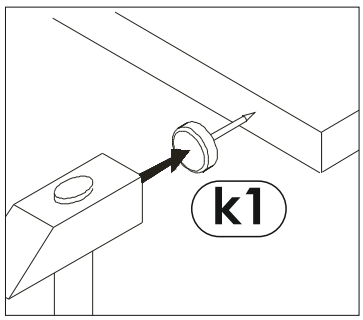

Nature One 12 18 FF 22

15	b1	e2
	x3	ϕ6.3x13 mm x6

Version **R**

Version **L**

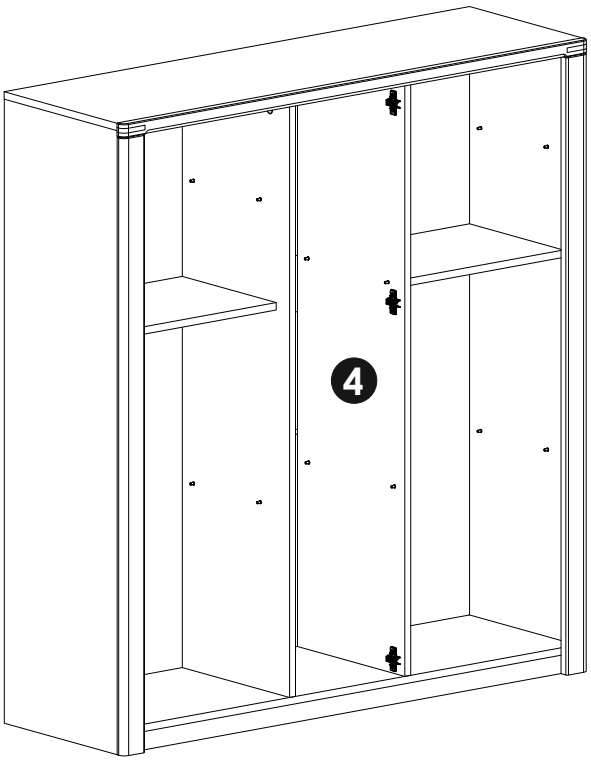

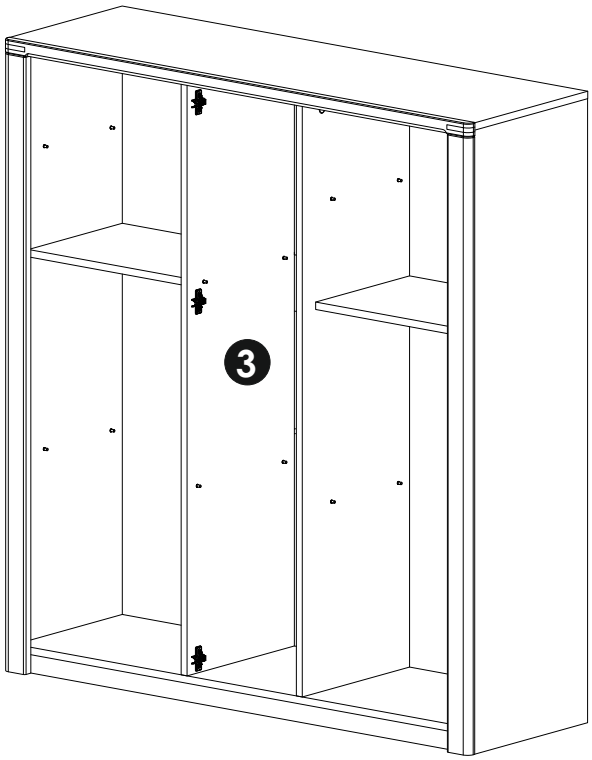

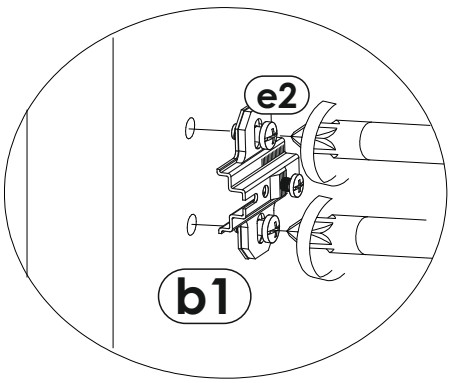

Nature One 12 18 FF 22

16	c28	j2
	192 mm x3	M4x25 mm x6

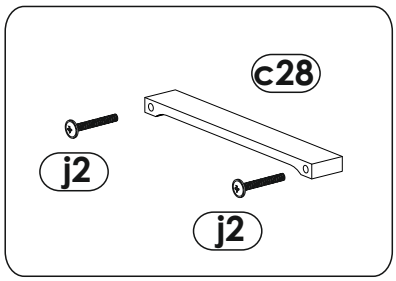

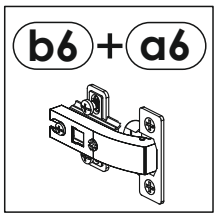

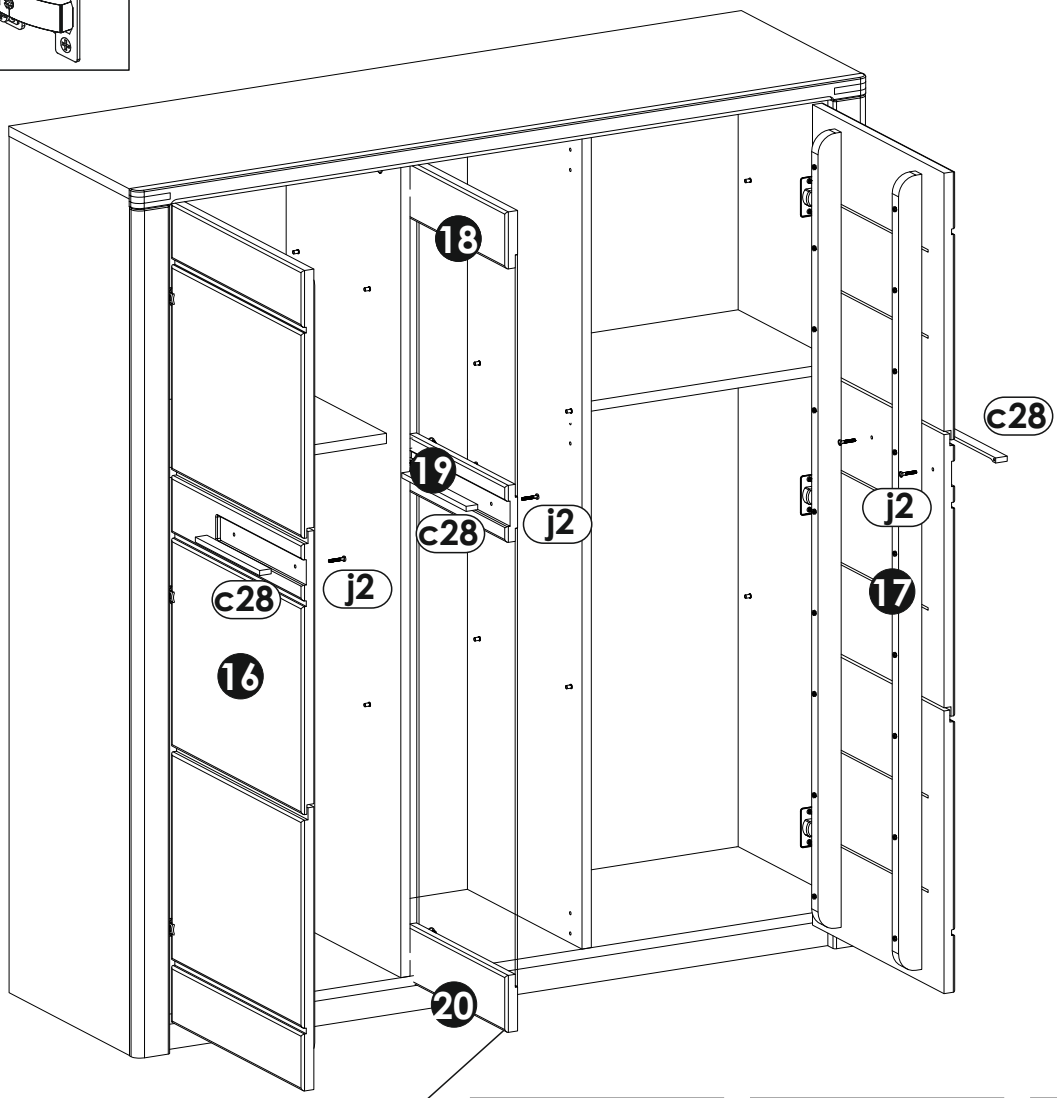

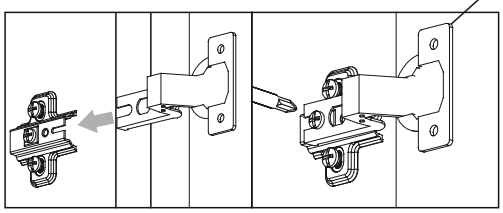

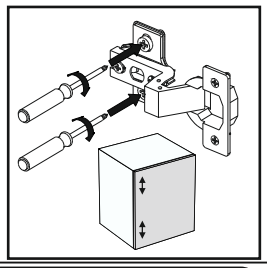

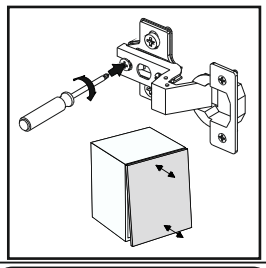

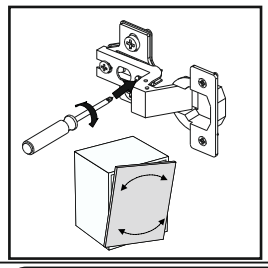

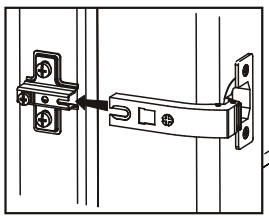

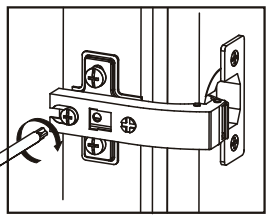

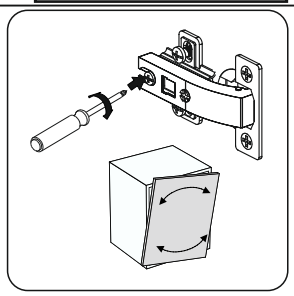

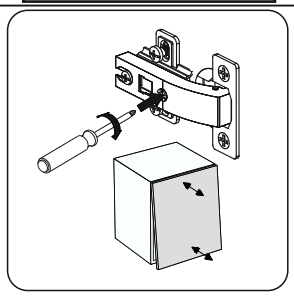

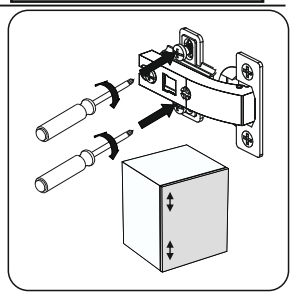

Nature One 12 18 FF 22

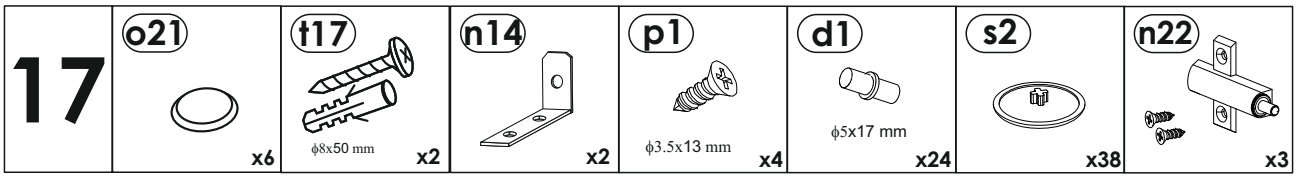

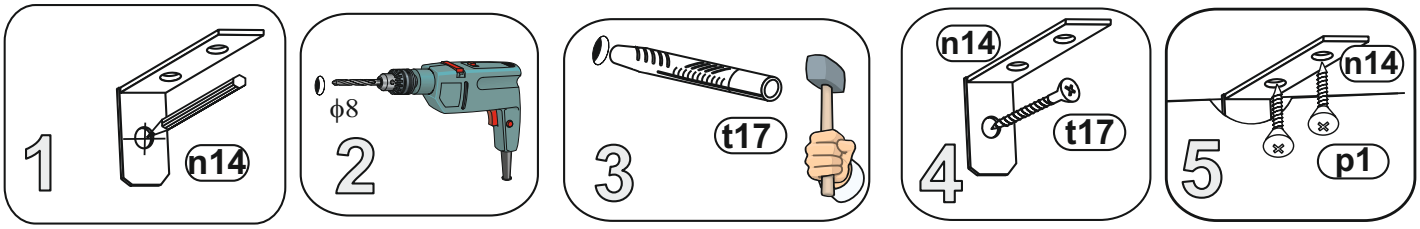

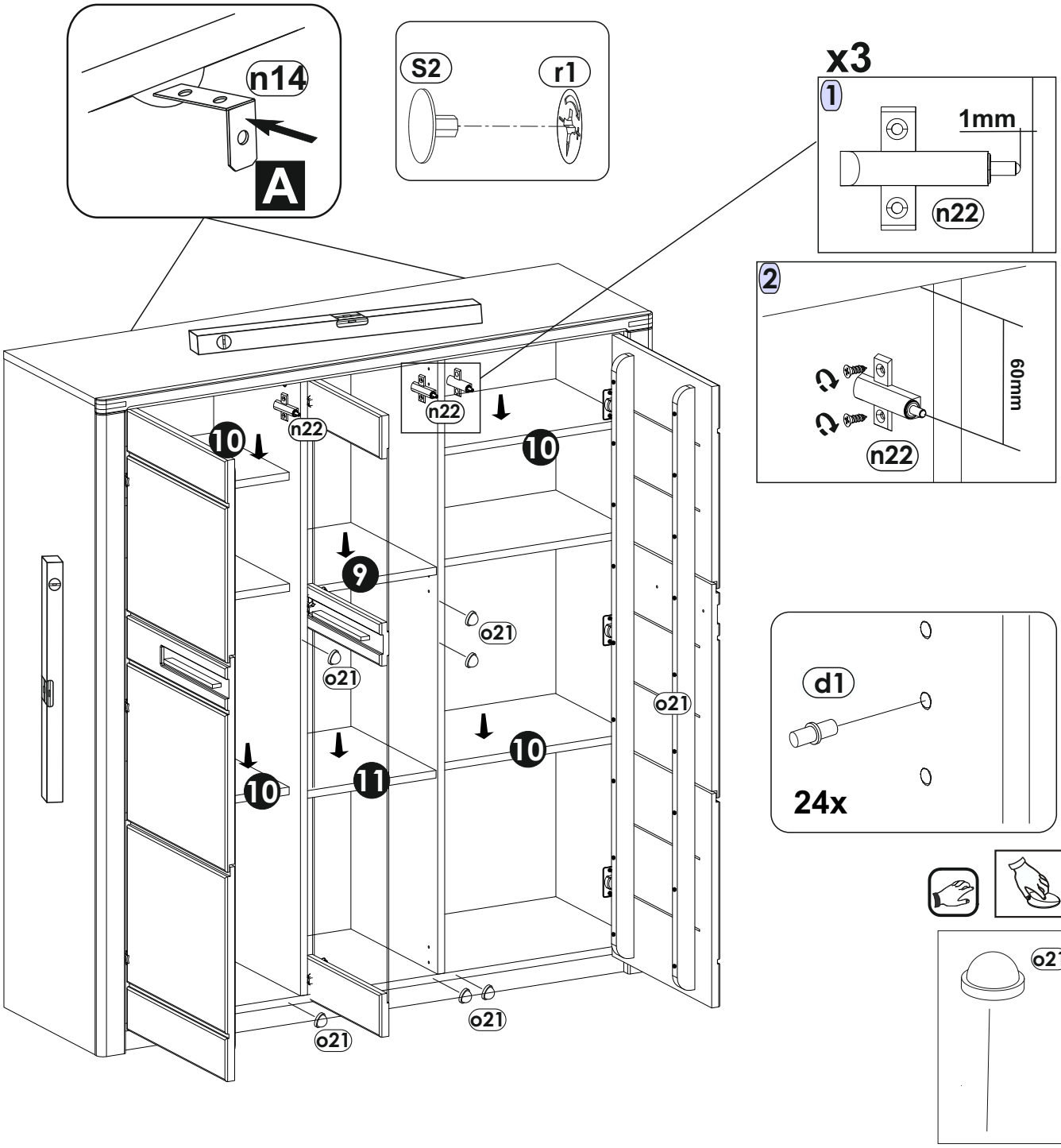
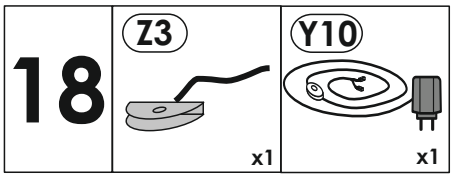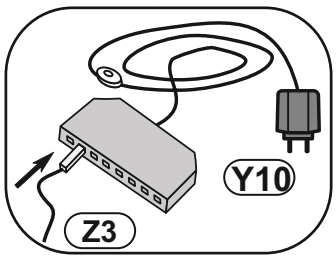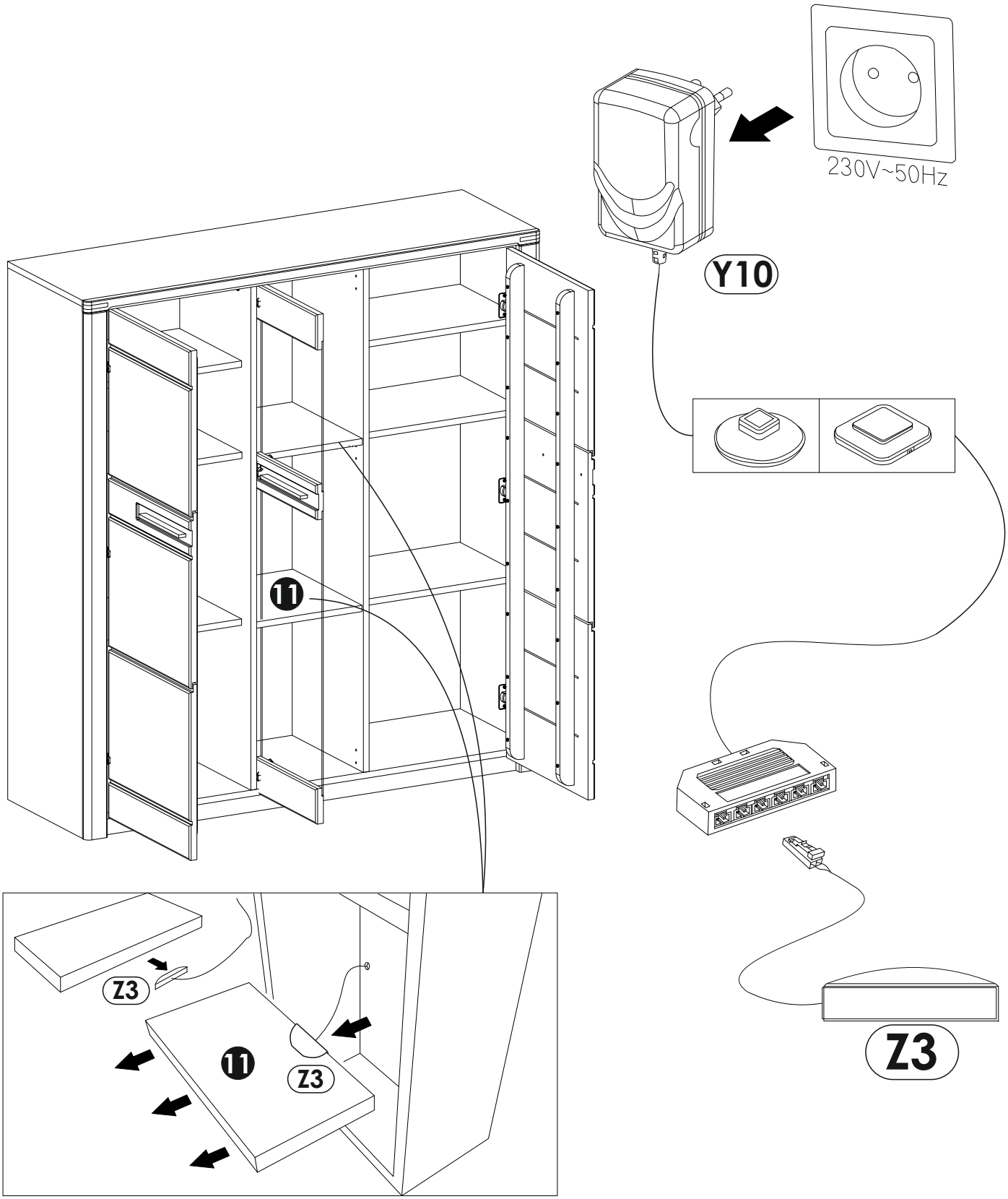
Nature One 12 18 FF 22