XXXLutz KG
Roemerstrasse 39
AT-4600 Wels Austria

11090027/01

Ⓐ ×1	Ⓑ ×1	Ⓒ ×1	Ⓓ ×2	Ⓔ ×1	Ⓕ ×4	Ⓖ ×4
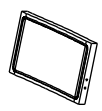			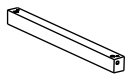			M8*45

Ⓗ ×4	Ⓘ ×8	Ⓙ ×1	Ⓚ ×1
M8	M6*40	M6	M4

1

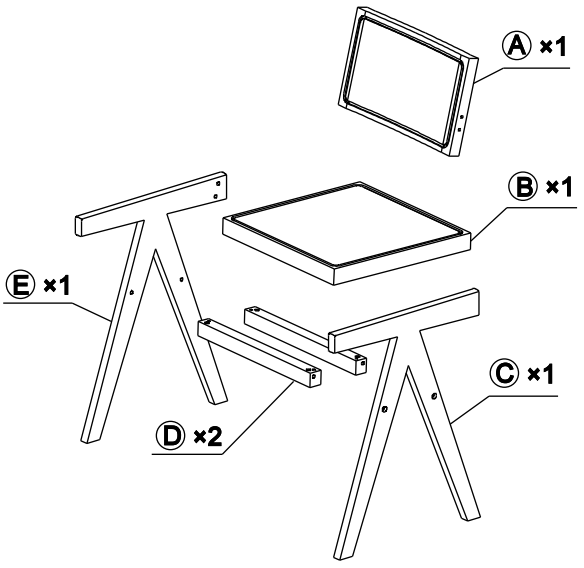

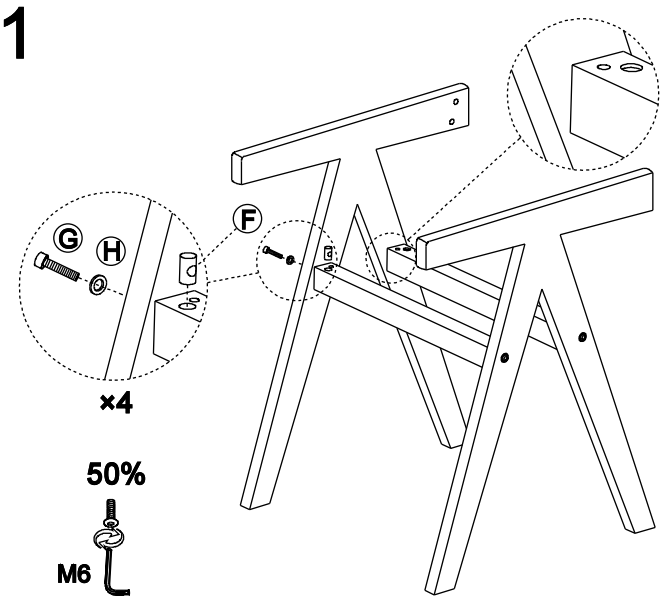

2

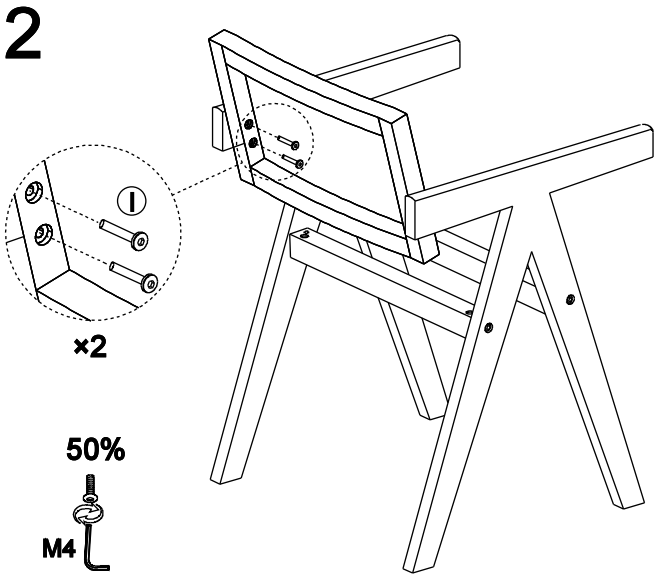

3

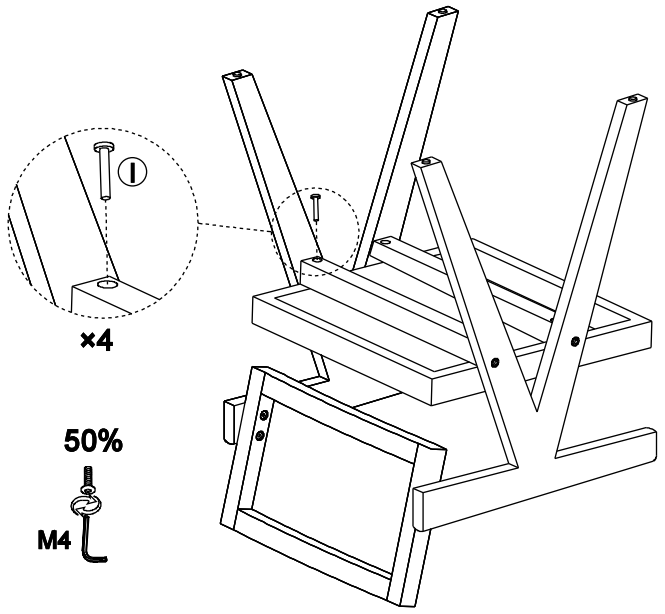
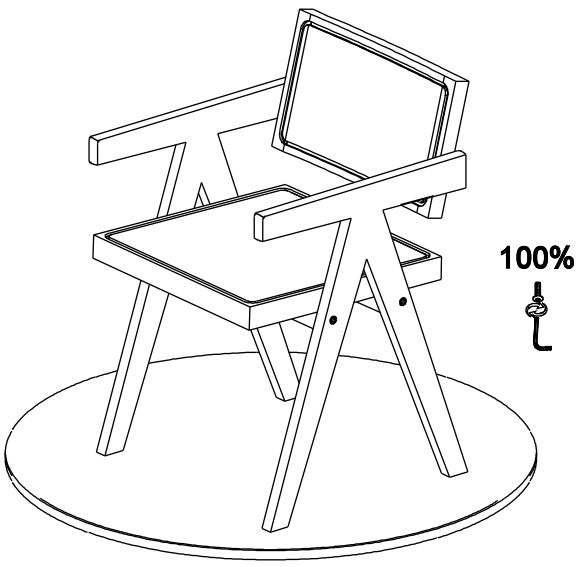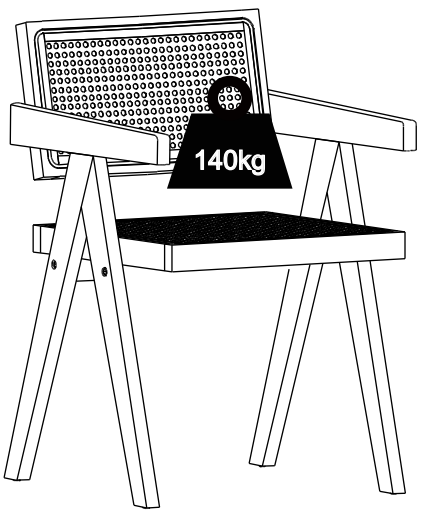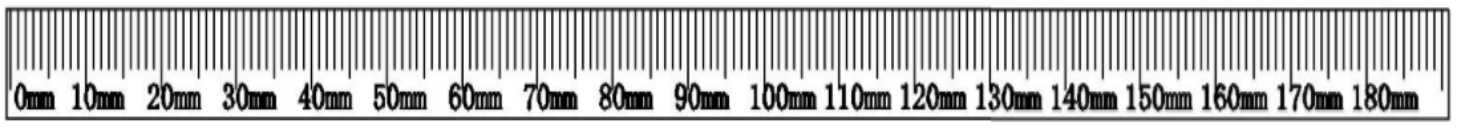
4