MZ389_01

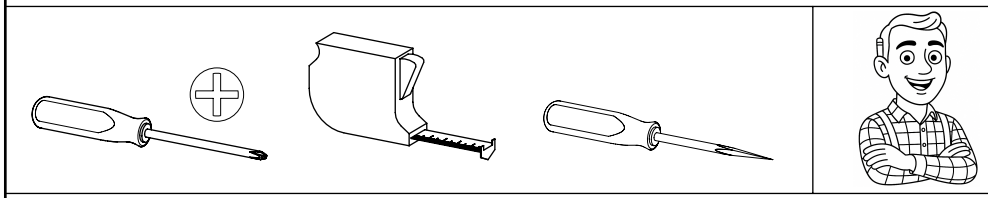

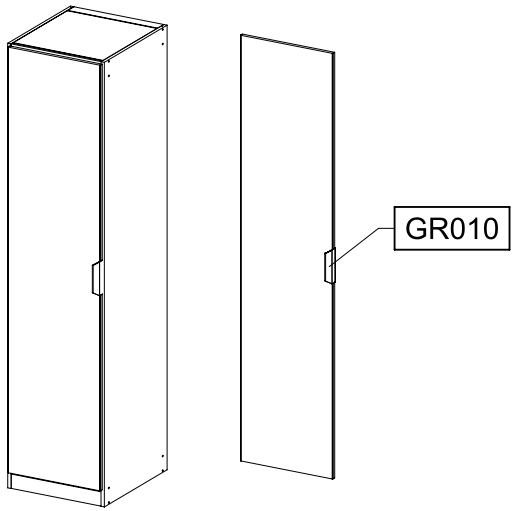

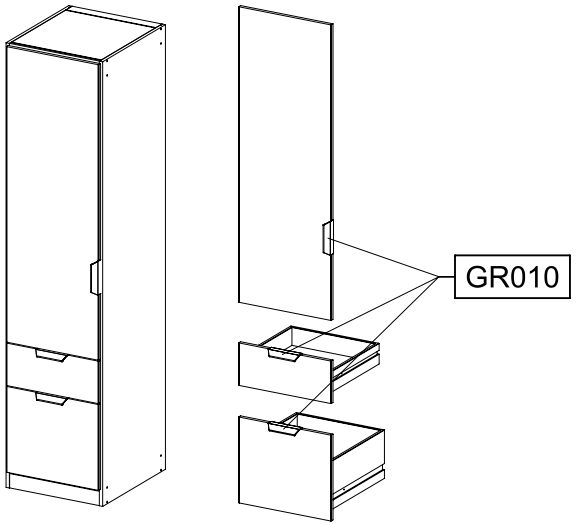

GR010

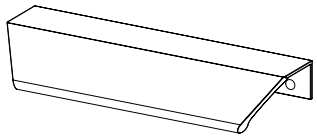

208

3,5x15





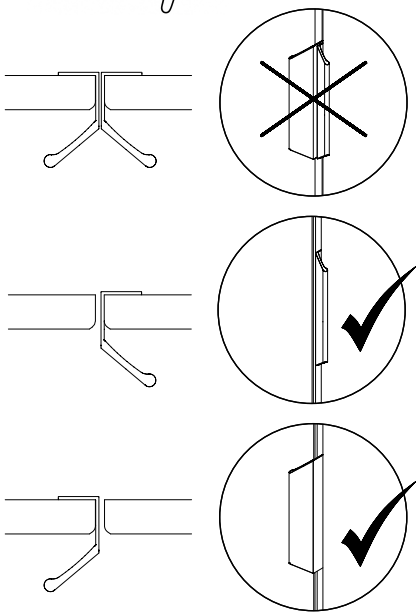

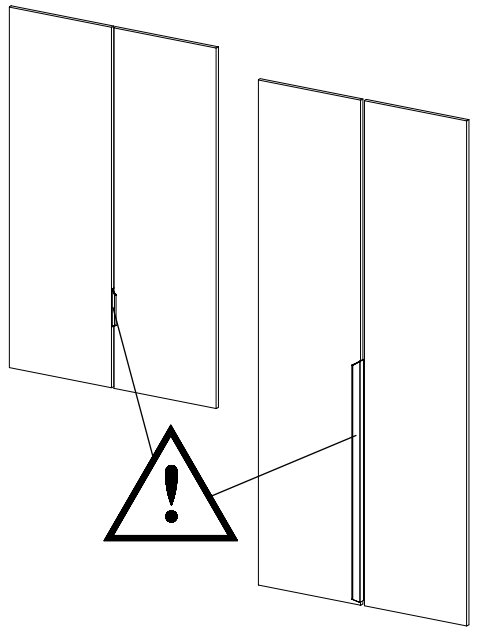

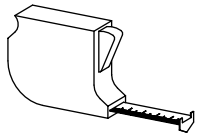

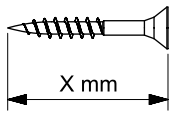

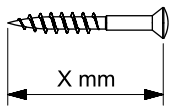

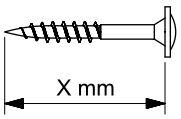

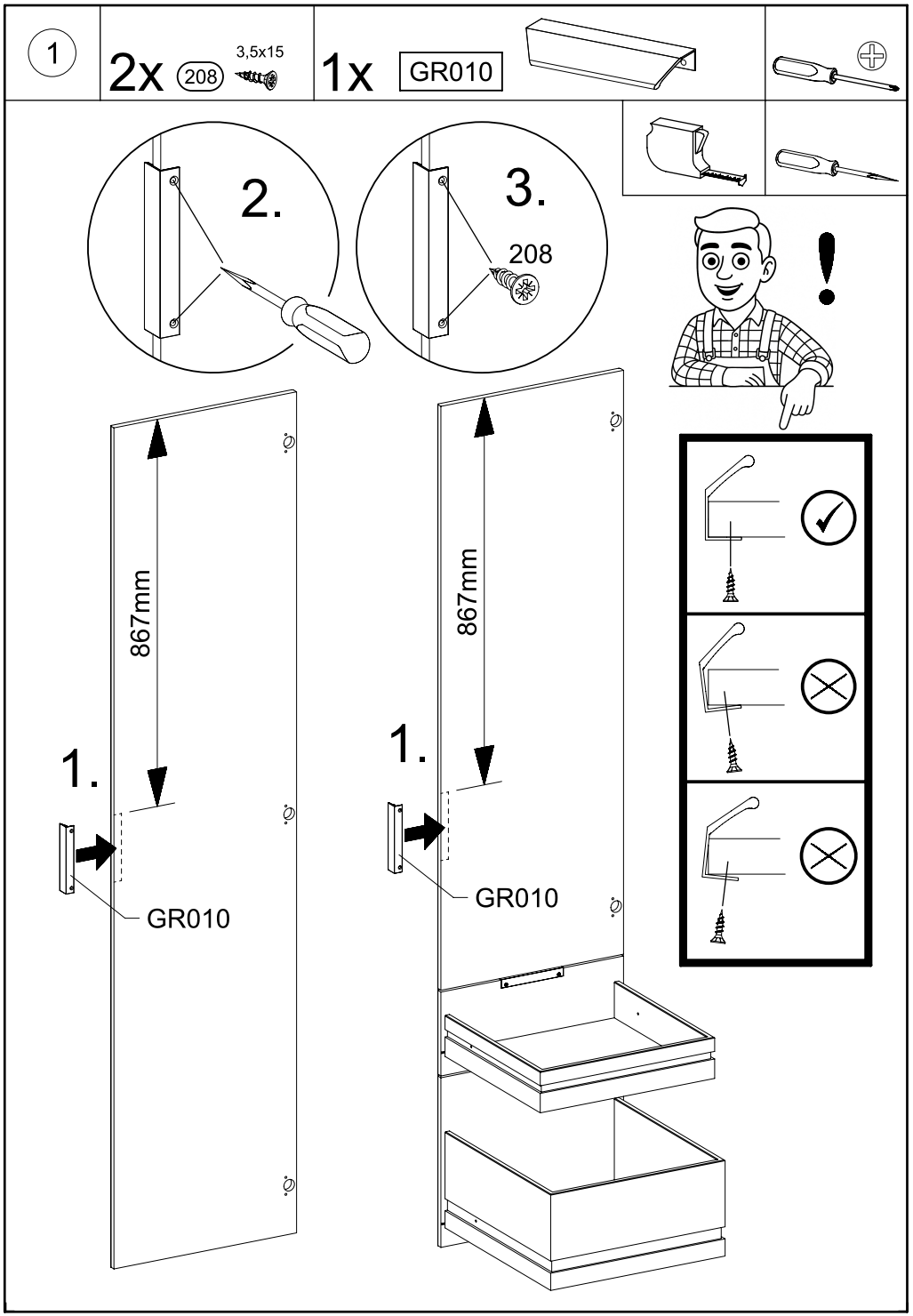
1
2x 208 3,5x15
1x GR010
2.
3.
208
867mm
1.
GR010
867mm
1.
GR010

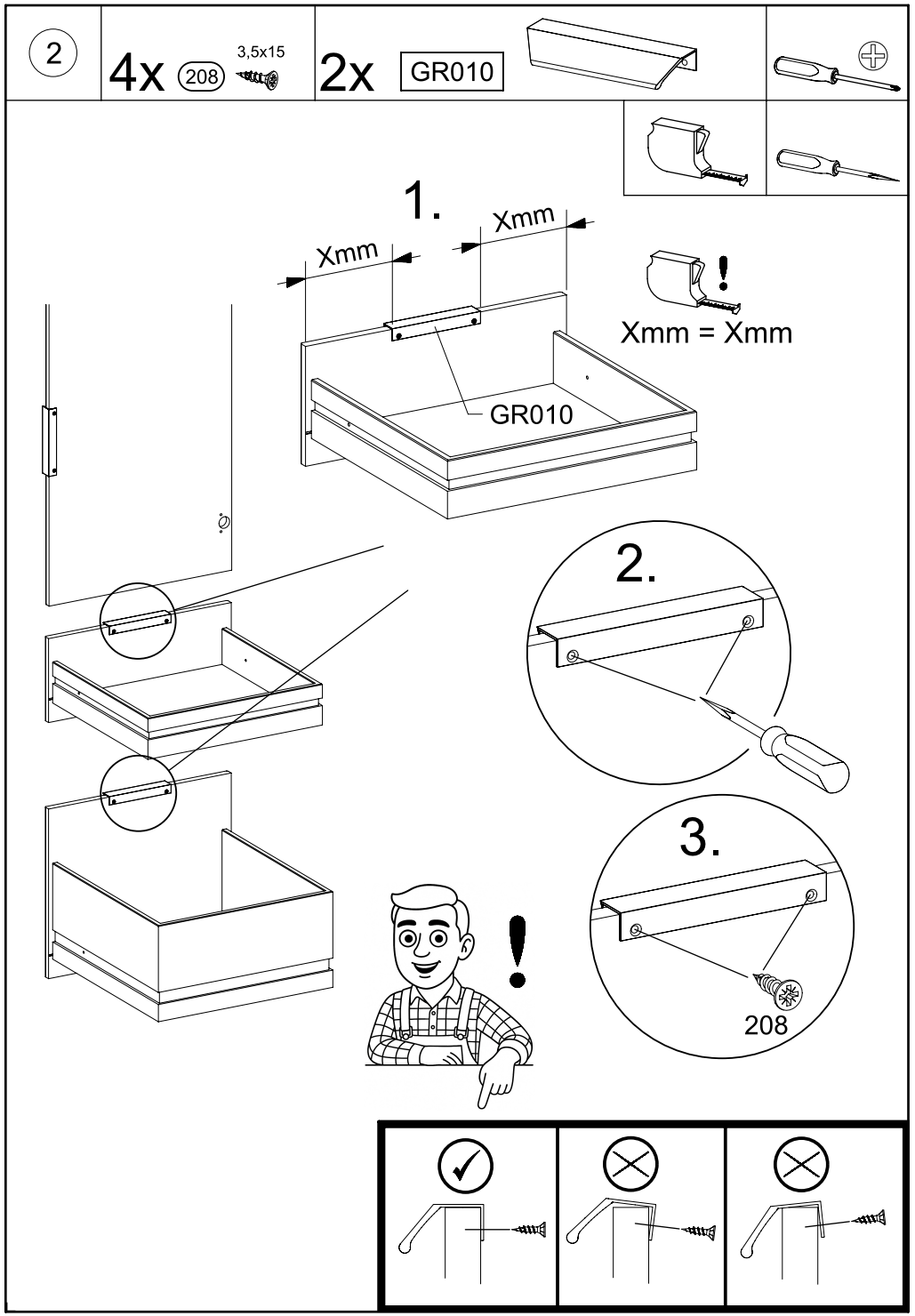
2
4x 208 3,5x15
2x GR010
1.
Xmm
Xmm
Xmm = Xmm
GR010
2.
3.
208