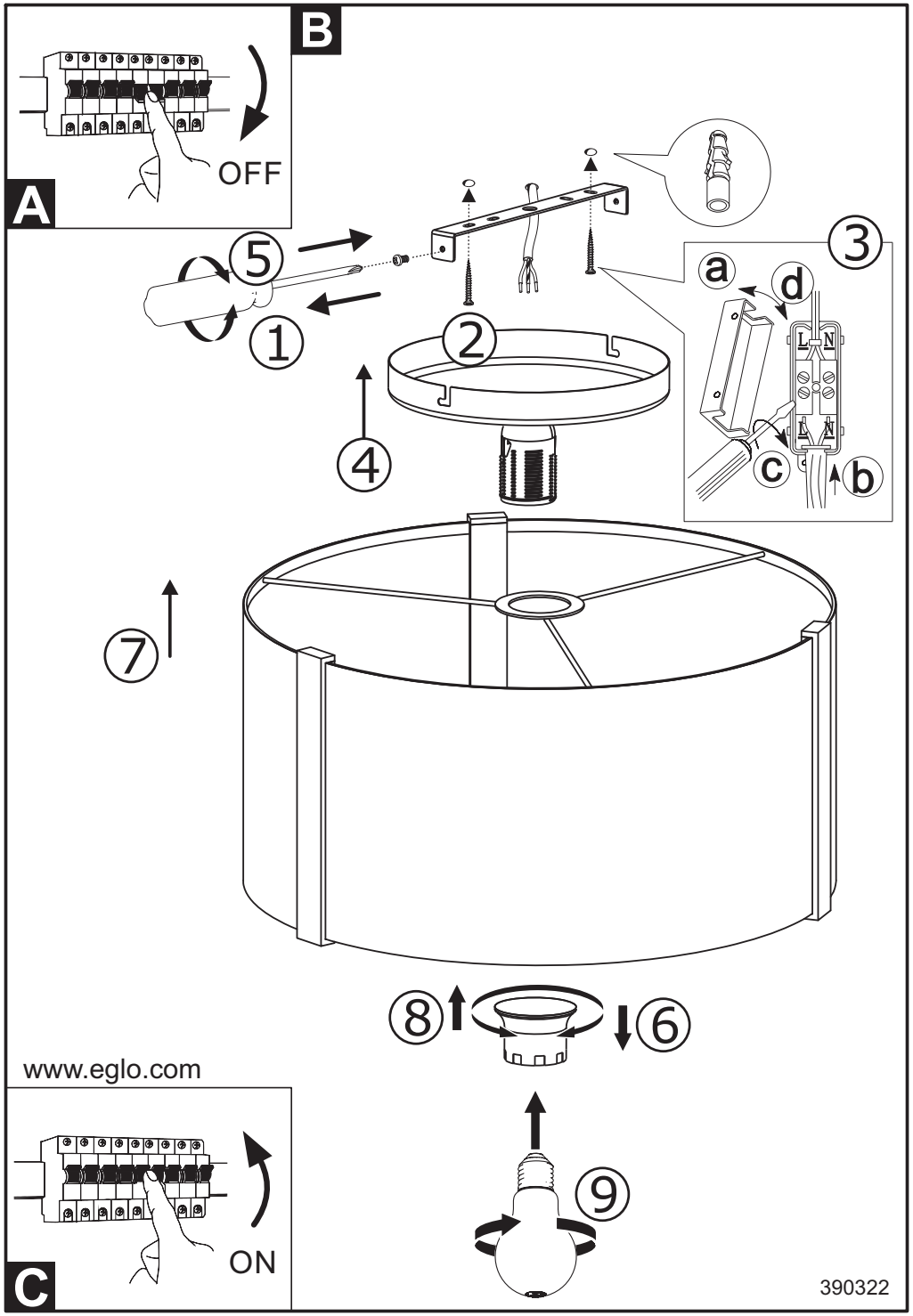
A
B
OFF
1
2
3
4
5
a
b
c
d
L
N
7
8
6
9
www.eglo.com
ON
C
390322

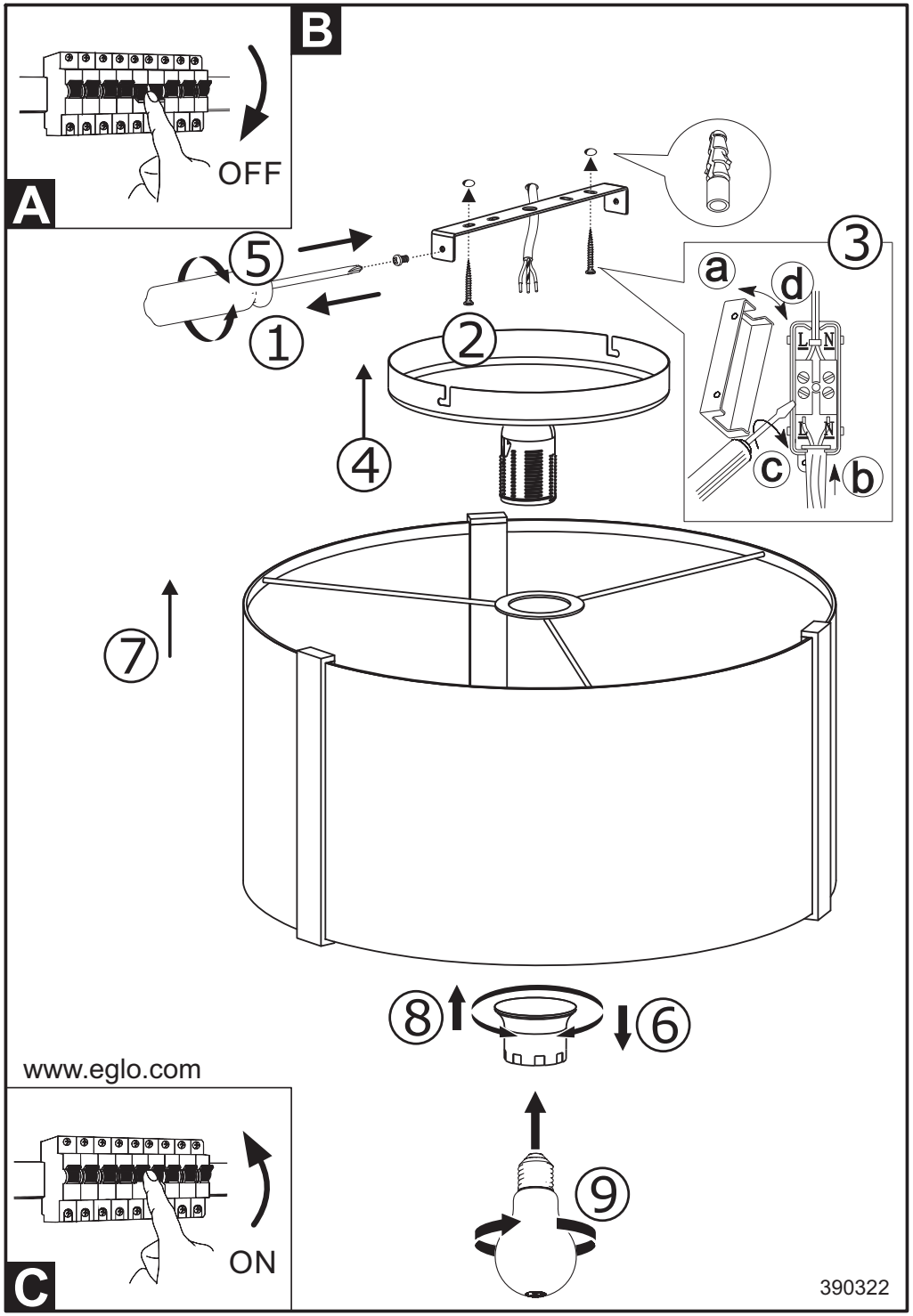
A
B
OFF
1
2
3
4
5
a
b
c
d
L
N
7
8
6
9
www.eglo.com
ON
C
390322