Please install the fixture onto a sufficiently strong, load bearing surface.

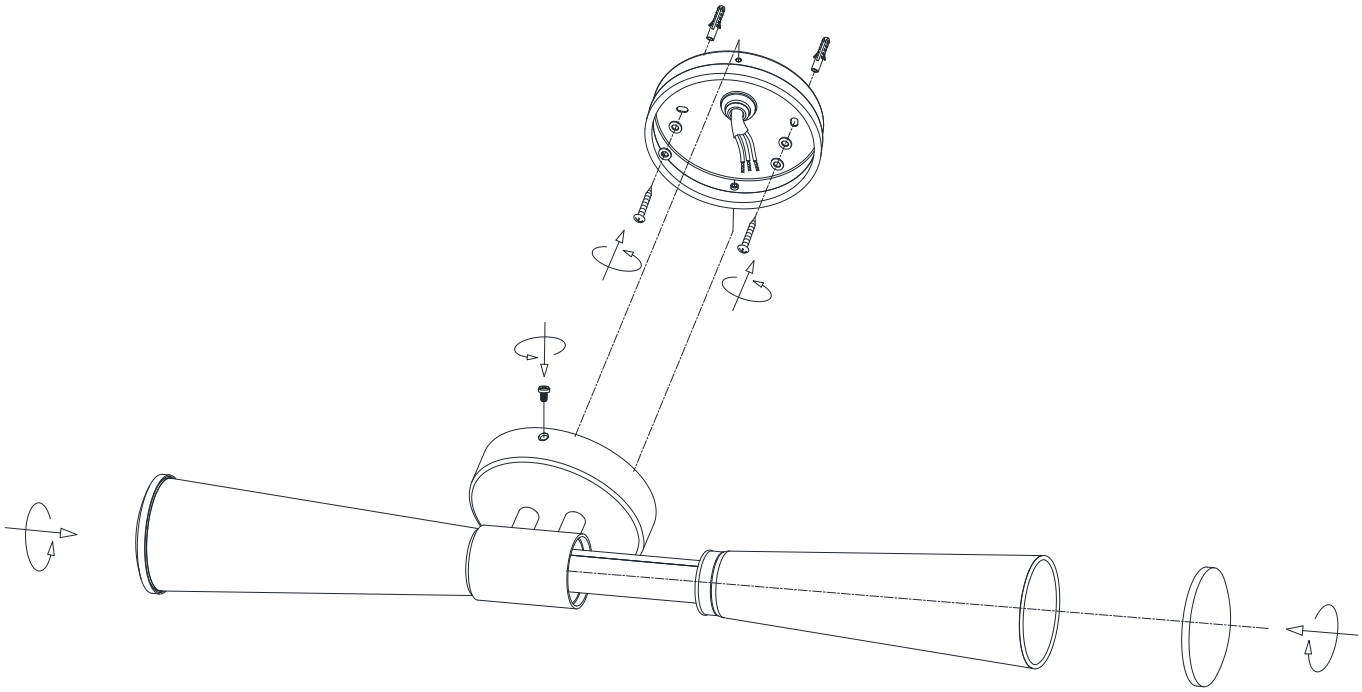

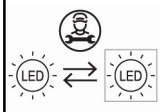





This product contains a light source of energy efficiency class G

See final page for wiring instructions.

Before starting the electrical work or connecting your light you will need to switch off your power supply at the fuse box (consumer unit). Either the miniature circuit breaker (MCB) can be turned off for the circuit for your light (it is suggested to apply RED insulating tape over the MCB to prevent it from being accidentally turned on). Or the main switch can be turned off, the circuit fuse removed, and the main switch turned on again to restore power to the rest of the house.

GREEN/YELLOW	Earth
BROWN	Live
BLUE	Neutral
BLUE with brown sleeving	Switch wire with sleeving
Live wires can also sometimes be signified by a RED wire	
Neutral wires can also sometimes be signified by a white or black wire	

CLASS I Luminaires (Earthed) **-** Connect the brown wire from the luminaire to the supply live wire (red or brown). Connect the blue wire to the supply neutral wire (black or blue). Connect the green/yellow wire to the supply earth wire (green/yellow) or connect the supply earth to the luminaire earth terminal marked:

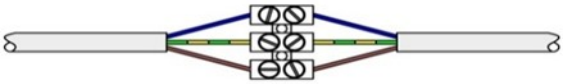

CLASS II Luminaires (Not earthed) **-** These luminaires are double insulated and have the symbol:

These fittings do not have to be connected to the supply earth. Make sure that the basic insulation of the supply wiring cannot contact touchable metal. Connect the brown wire from the luminaire to the supply live wire (red or brown). Connect the blue wire to the supply neutral wire (black or blue). Isolate the supply earth wire.

If silicone sleeving is provided, fit over the supply cable up to the terminal block or lamp holder, to at least the mounting surface, to protect cable from heat.



Recycling
You have a duty to dispose of electrical waste properly. Check with your Local Authority or Retailer for recycling advice.