Oslo

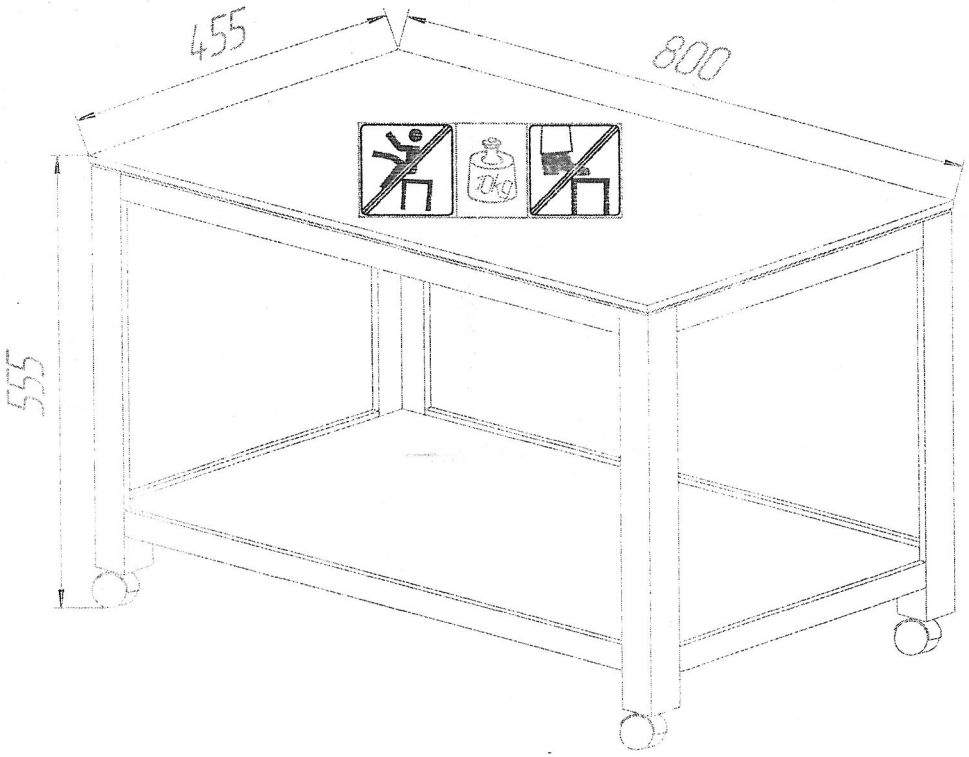

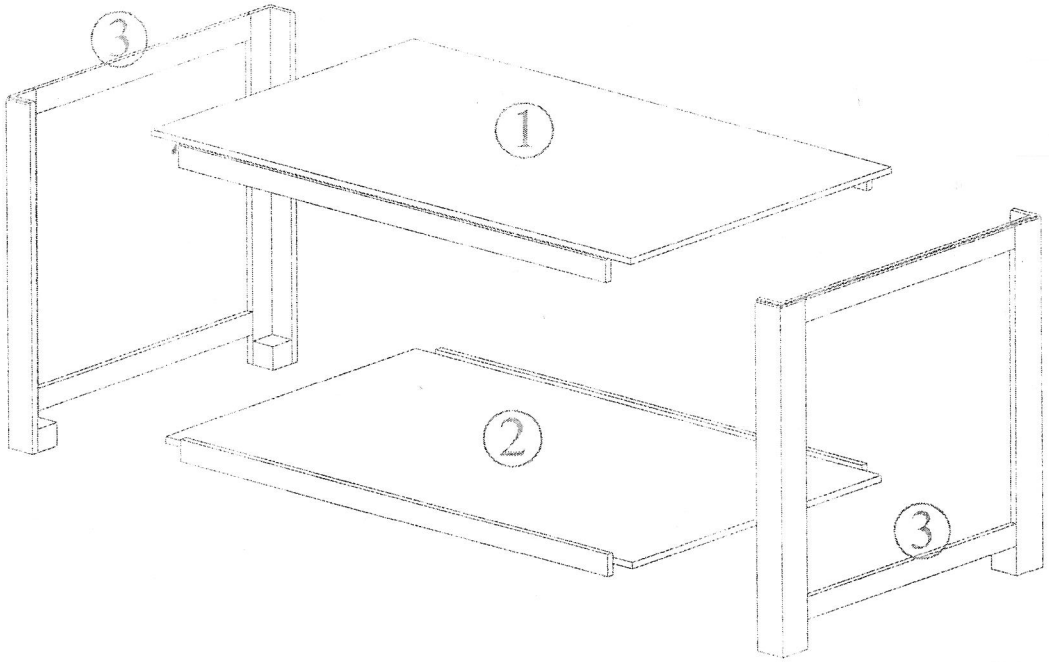

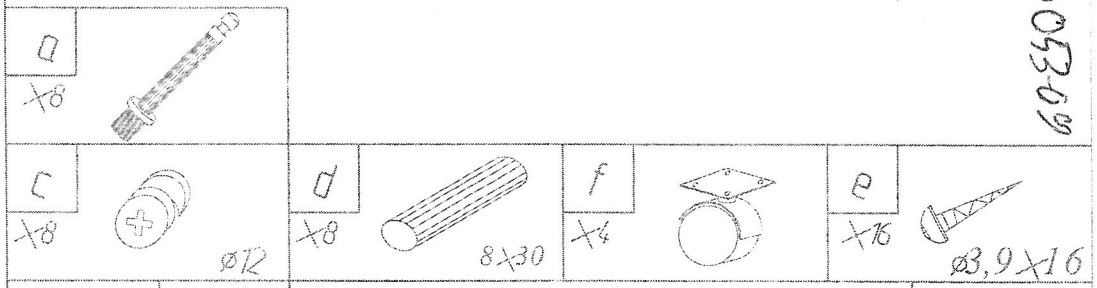

TEILE-NR	ANZAHL	MASS HxBxT (mm)	coll
1	1	800x455x68	1.1
2	1	764x419x50	1.1
3	2	455x480x65	1.1

24980309

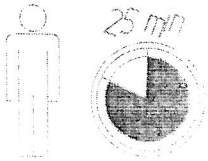

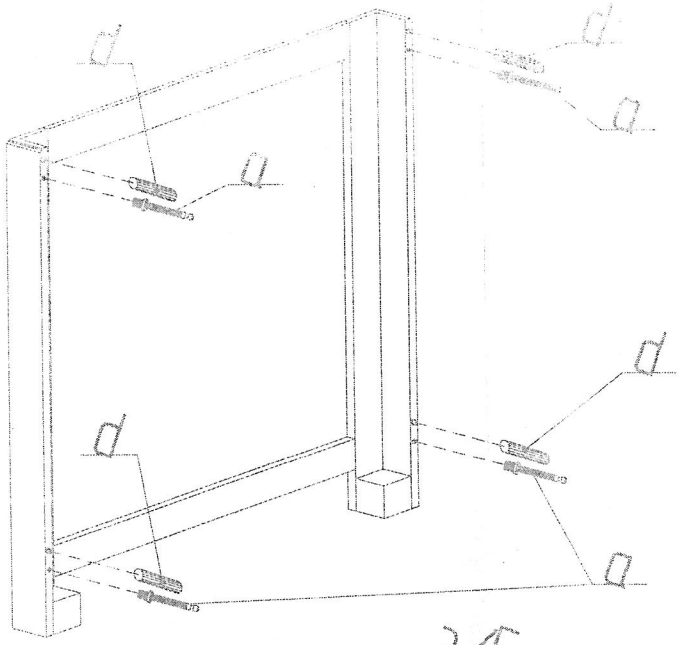
d
a
d
a
d
a
d
a

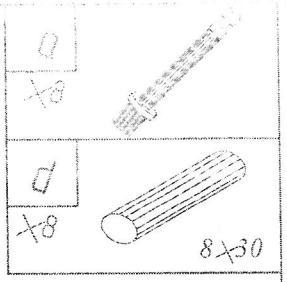
a
x8
d
x8
8x30

x2

3/5

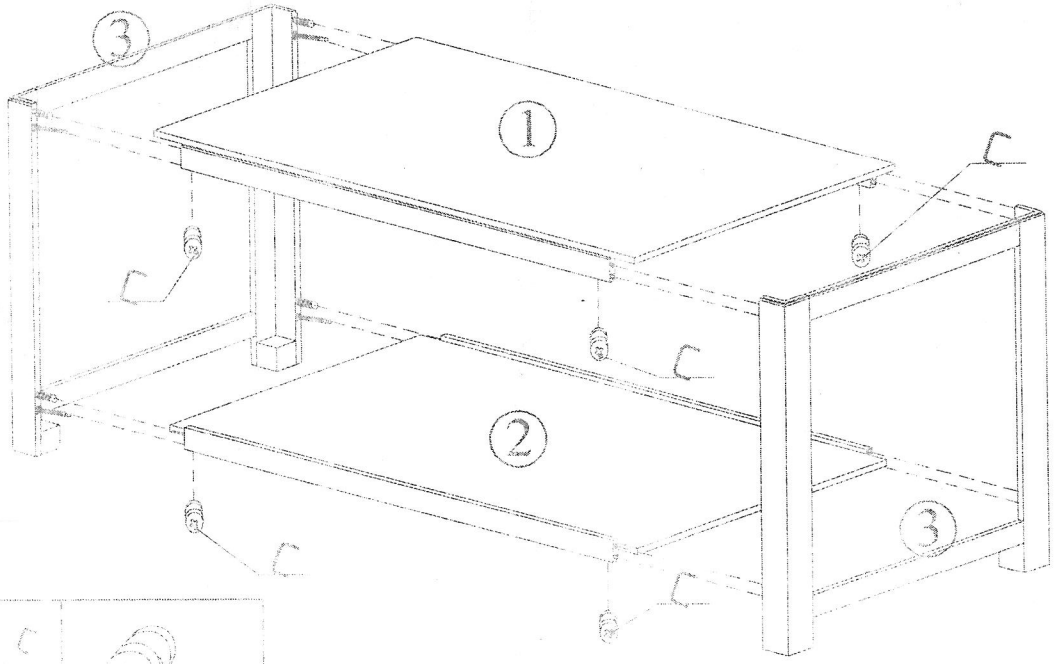
3
1
c
c
c
2
3
c
c

c
x8
Ø12

4/5

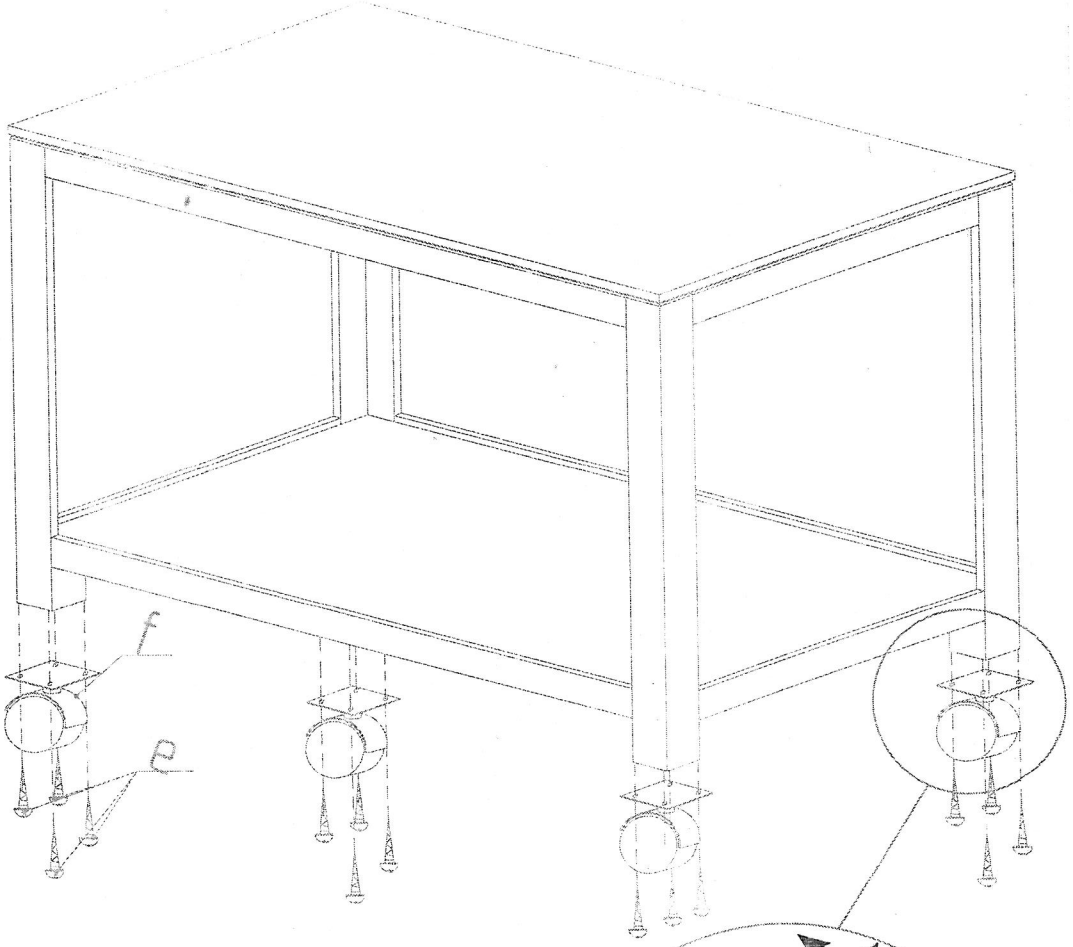
f
e

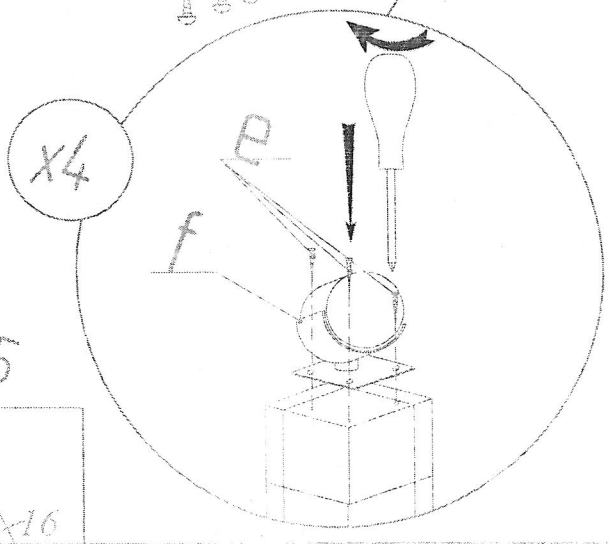
x4
e
f

5/5

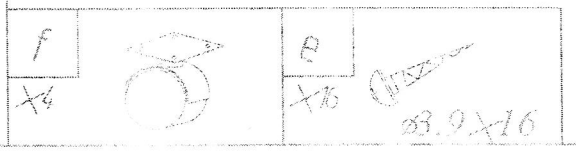
f
x4
e
x16
Ø8.9x16