17130016-01

BEISTELLTISCH

BDSK Handels GmbH & Co.KG
Mergentheimer Straße 59
DE-97084 Würzburg
E-Mail:Info@xxxlutz.at

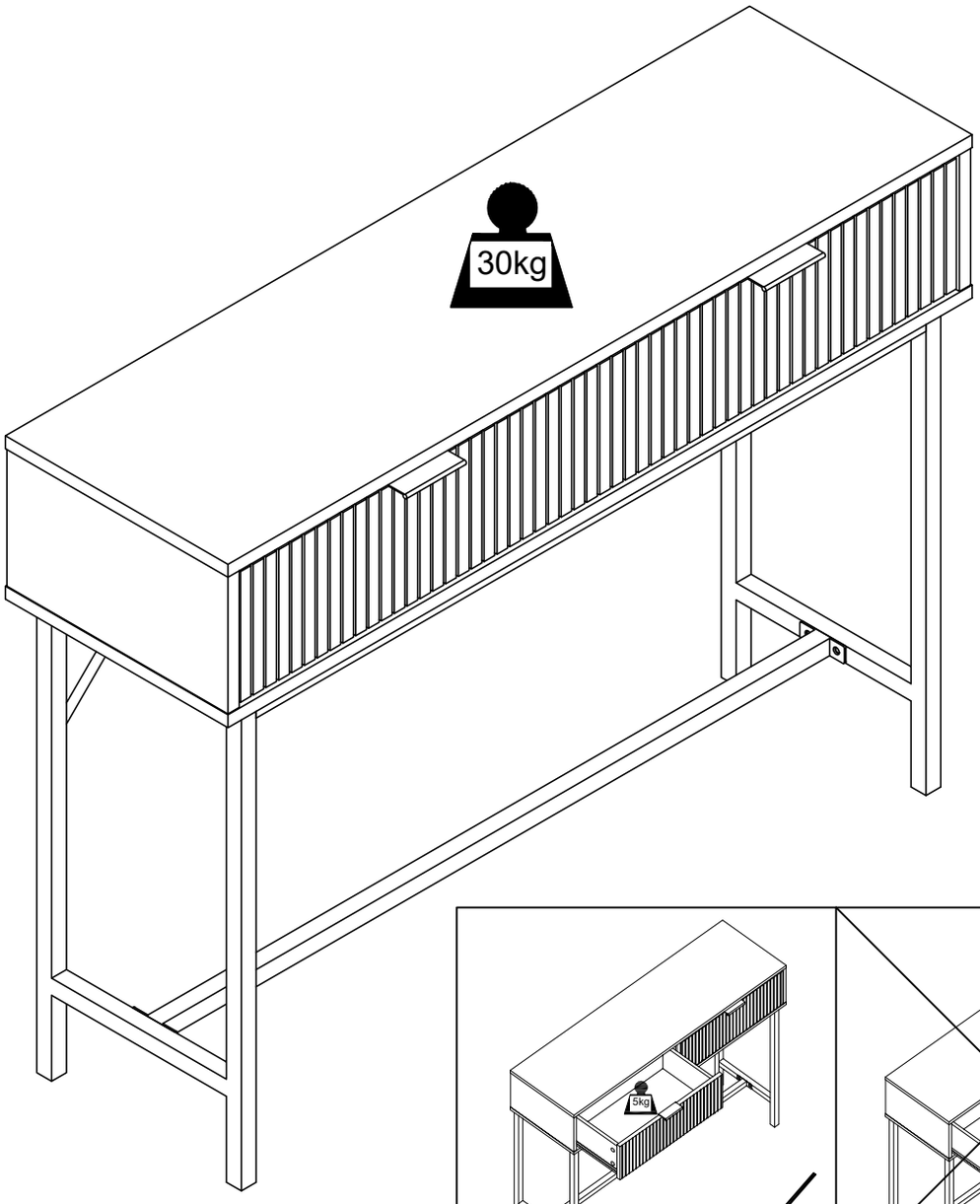

22
PAP

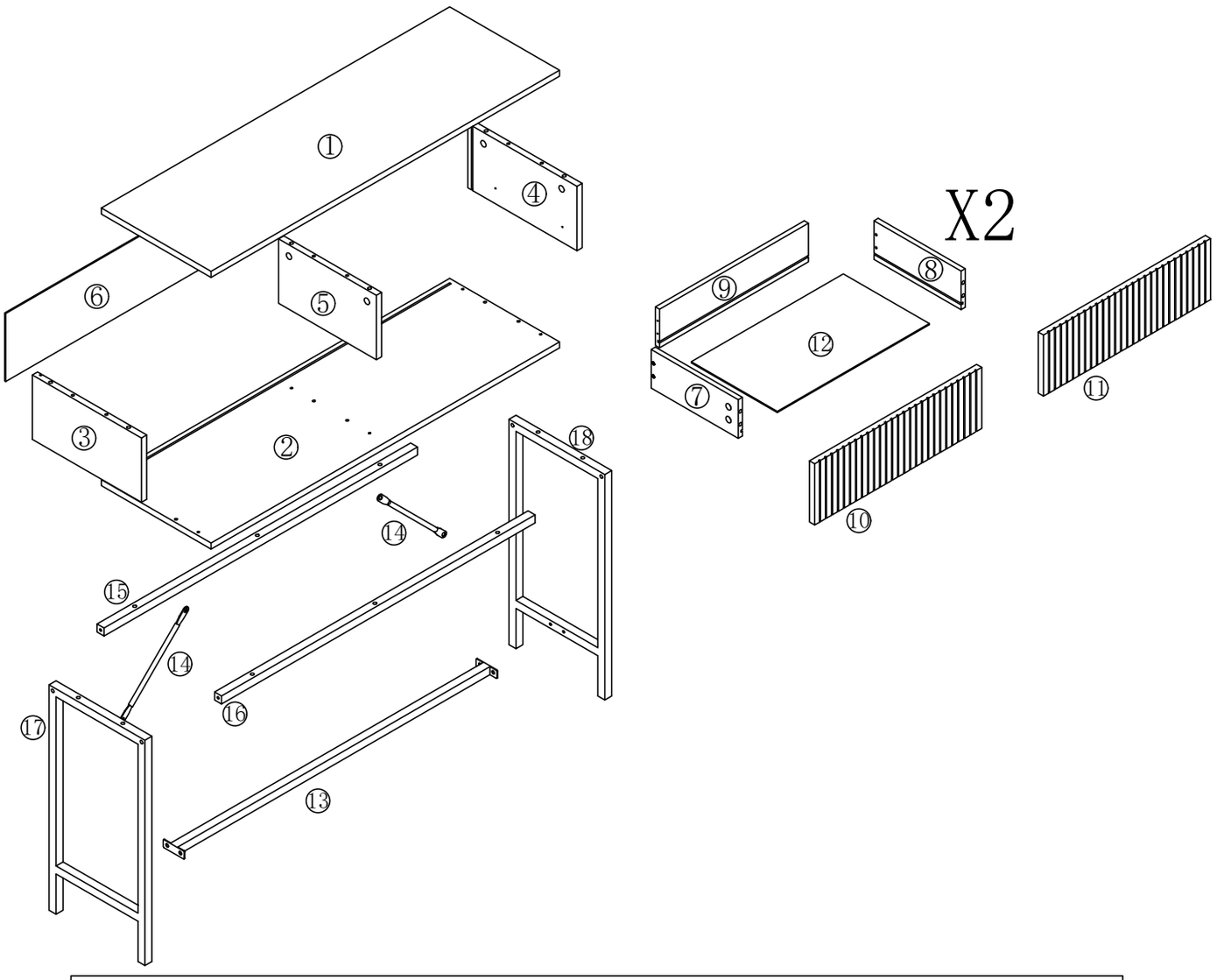

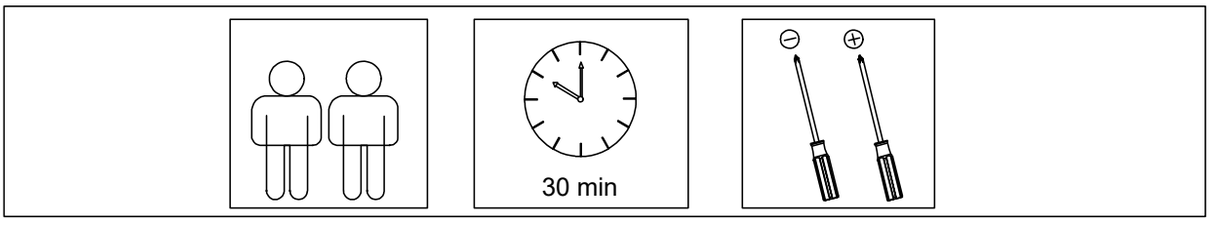

A ×14	B ×14	C ×12	D ×16	E ×20	F ×10	G ×4
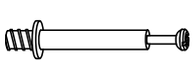		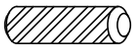	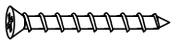			
M6x35MM	φ15x10	Φ 6x30	M4x40MM	M3x12MM	M6x30MM	M6x40MM

H ×1	I ×14	J ×2	K ×4	L ×6	M ×12	N ×2
		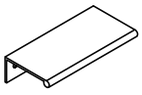		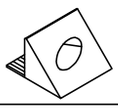		
			M6x12MM		M3.5x12MM	

O ×2	DL ×2	DR ×2	CL ×2	CR ×2
	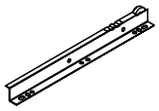	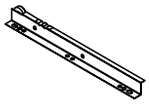	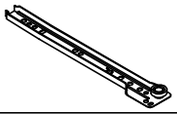	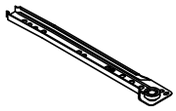
	250mm	250mm	250mm	250mm

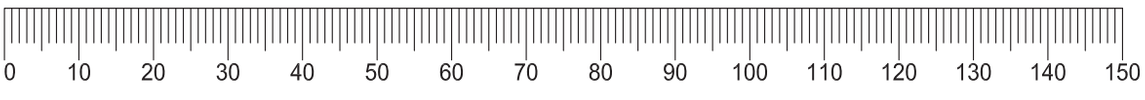

①

A	×6
M6x35MM	

E	×8
M3x12MM	

CL	×2

CR	×2

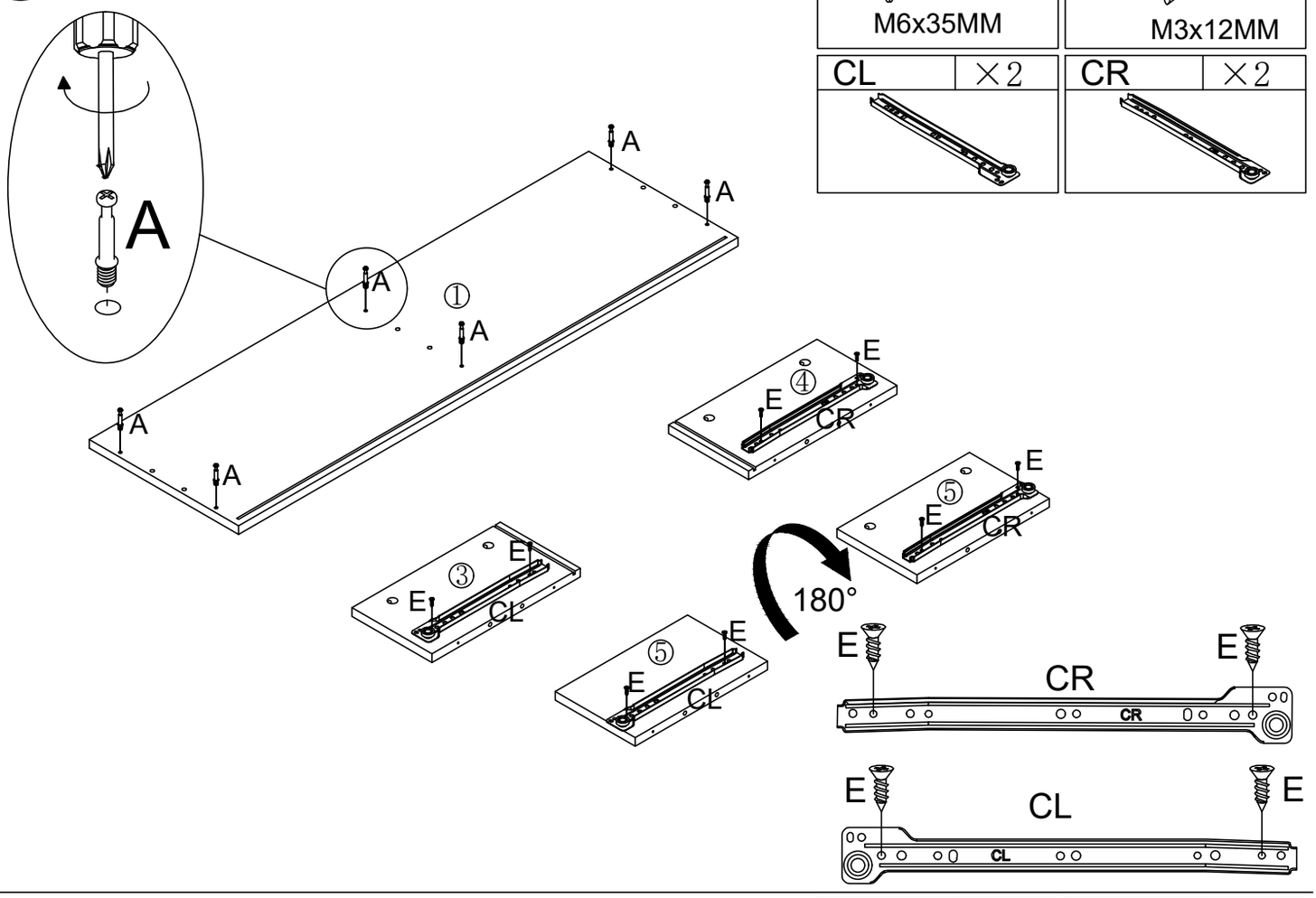

②

B	×6
φ15x10	

C	×6
φ6x30	

I	×6

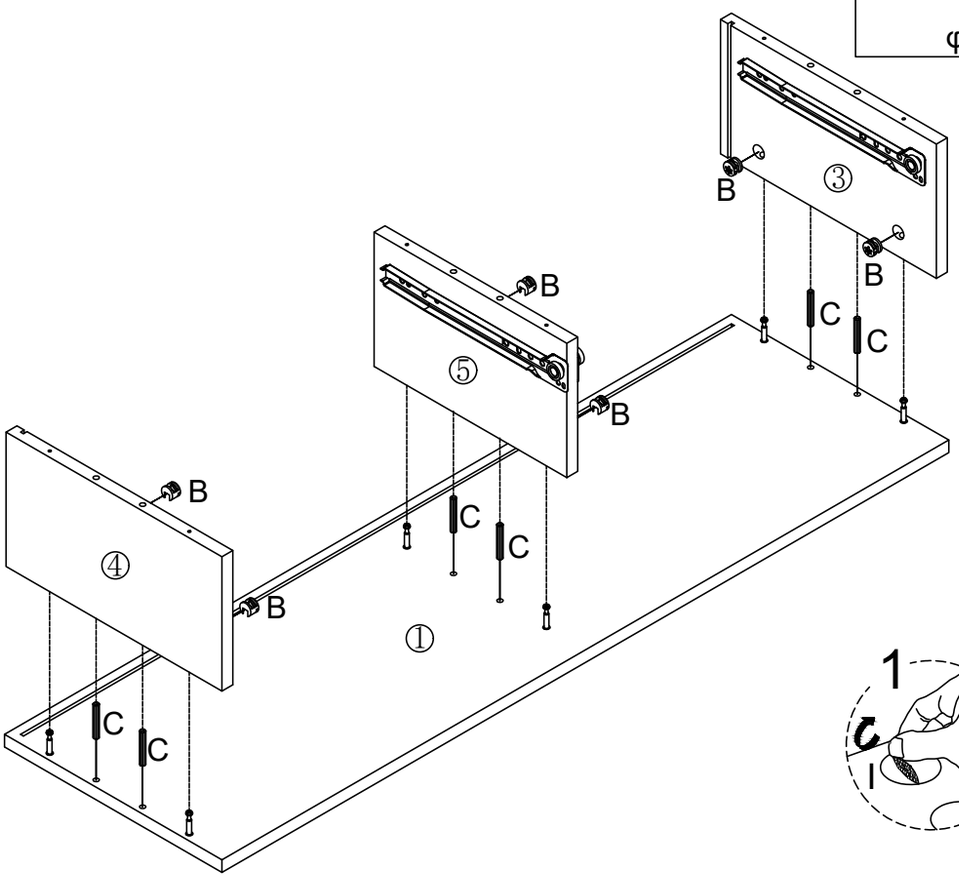

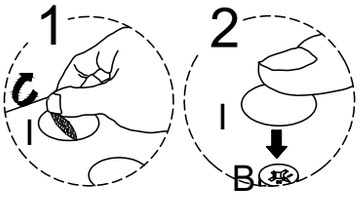

③

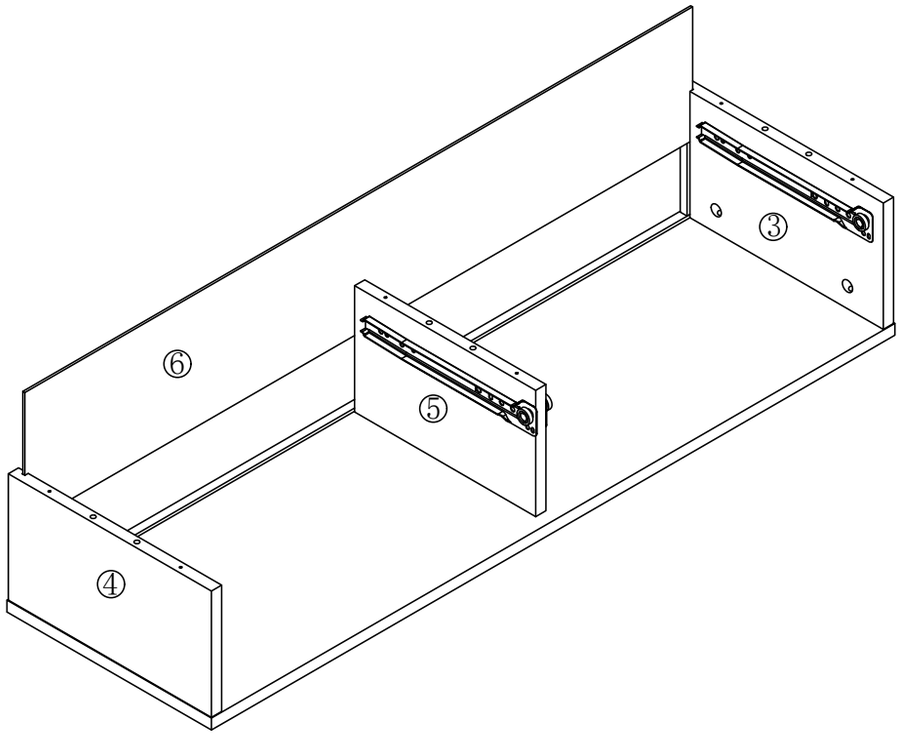

④

C	×6
φ6x30	

D	×6
M4x40MM	

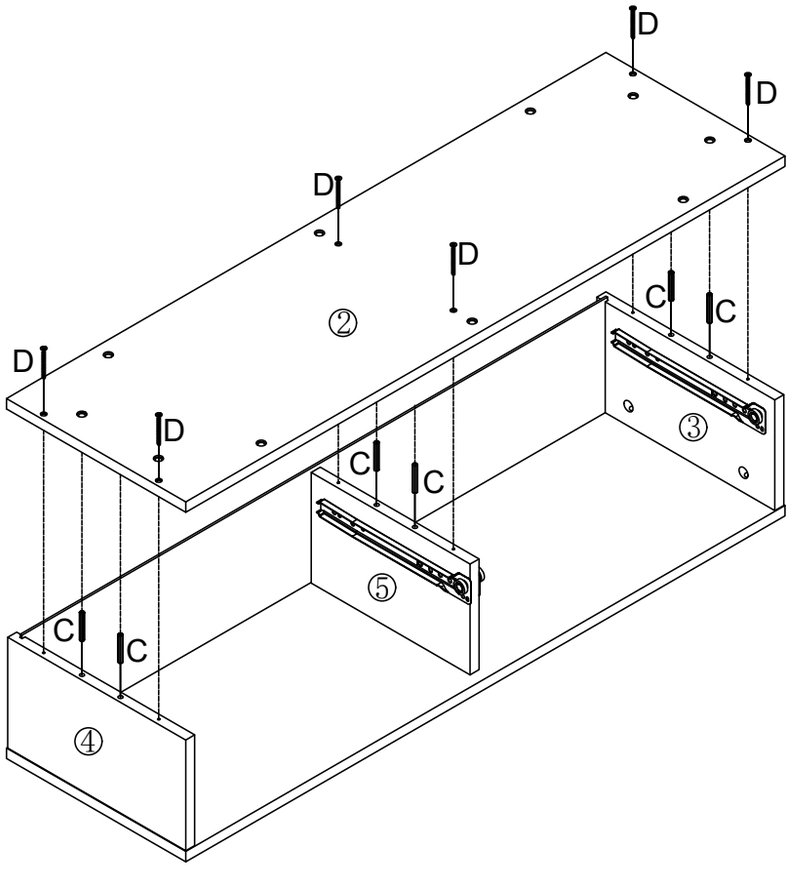

5

G	×2
M6x40MM	

K	×2
M6x12MM	

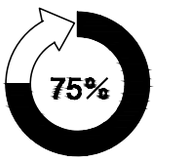

6

G	×2
M6x40MM	

K	×2
M6x12MM	

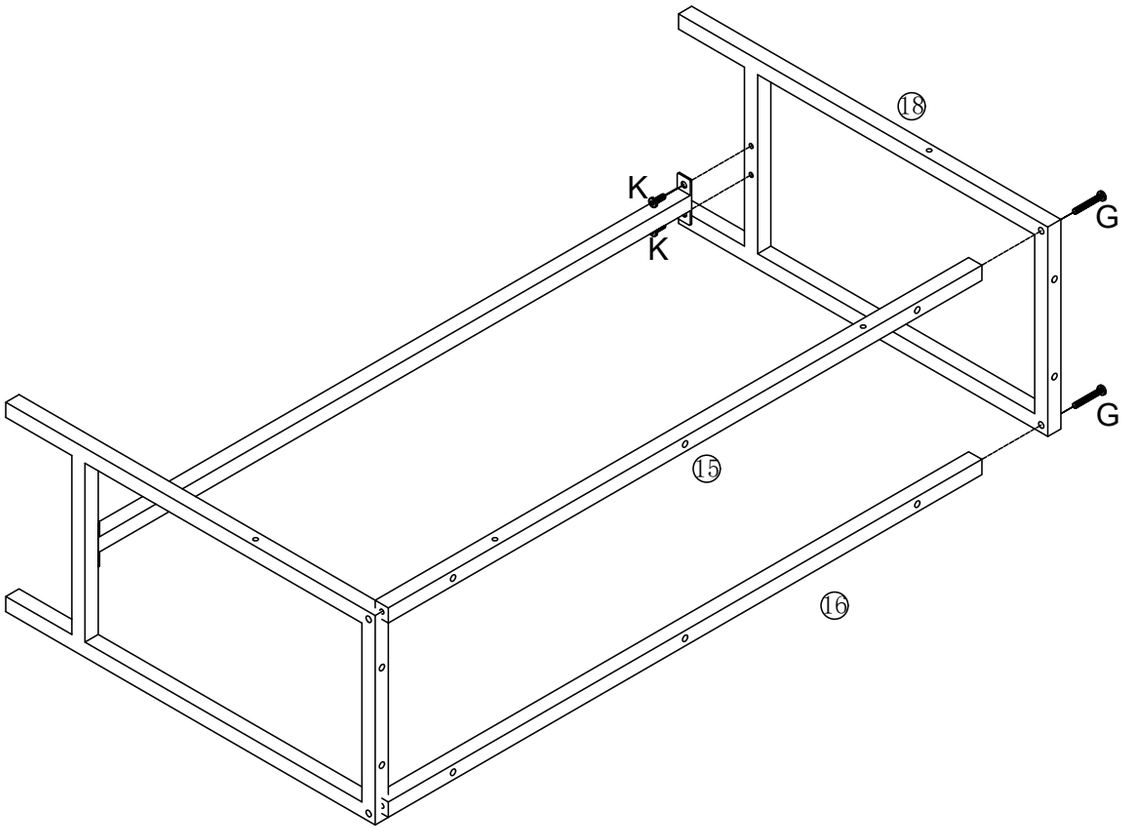

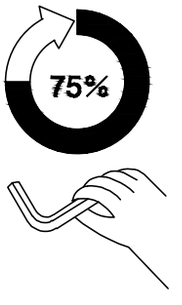

7

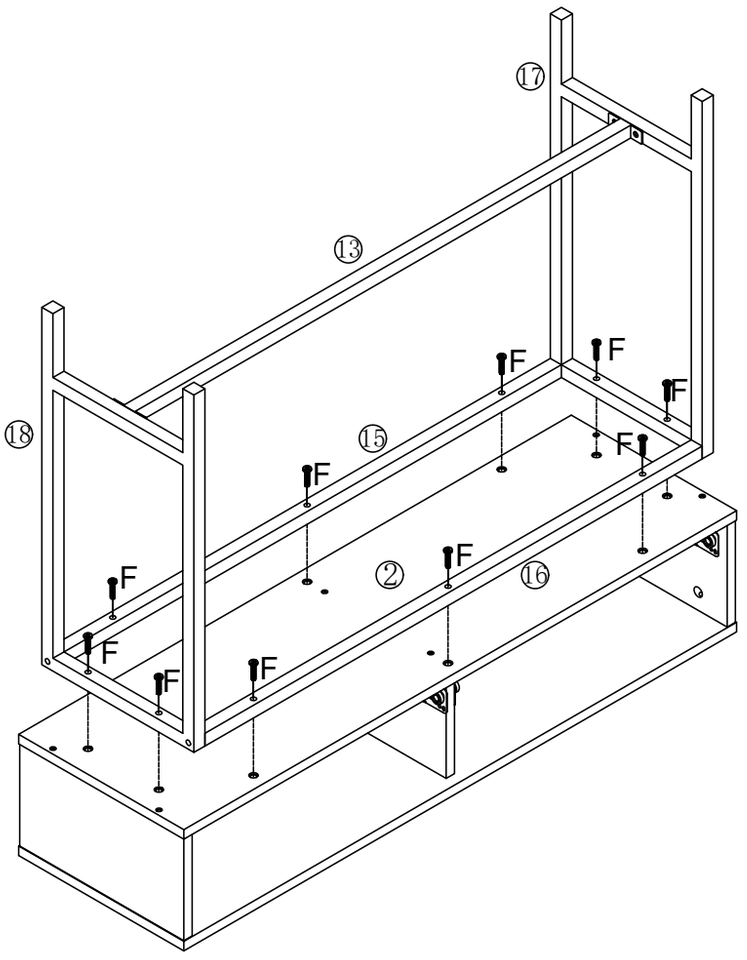

F	×10
M6x30MM	



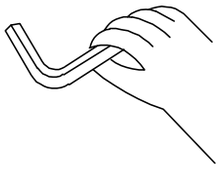

8

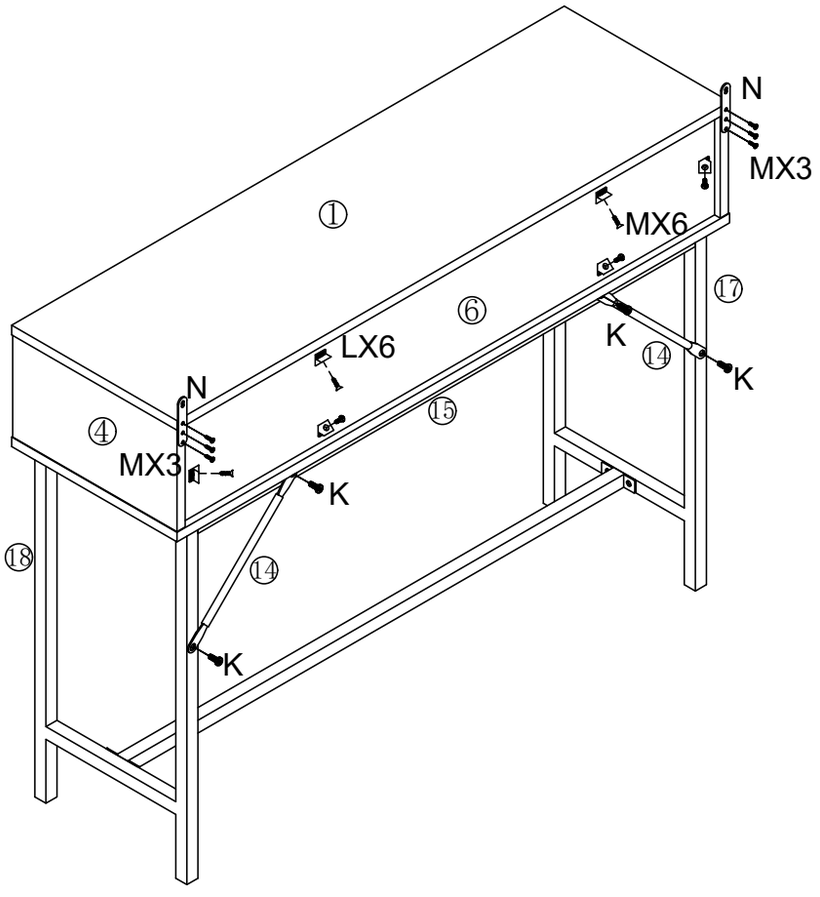

M	×12
M3.5x12MM	

K	×4
M6x12MM	

N	×2

L	×6

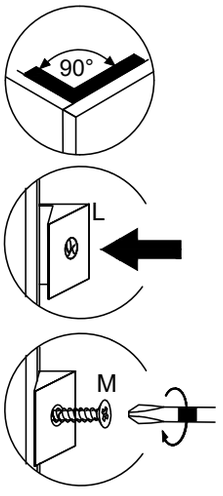

⑨

D	×8
M4x40MM	

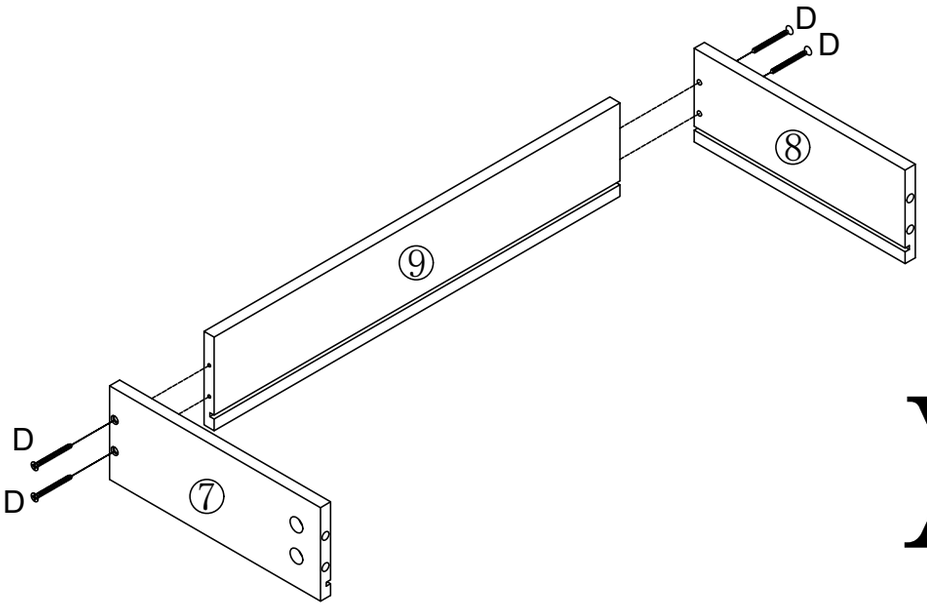

X2

---

⑩

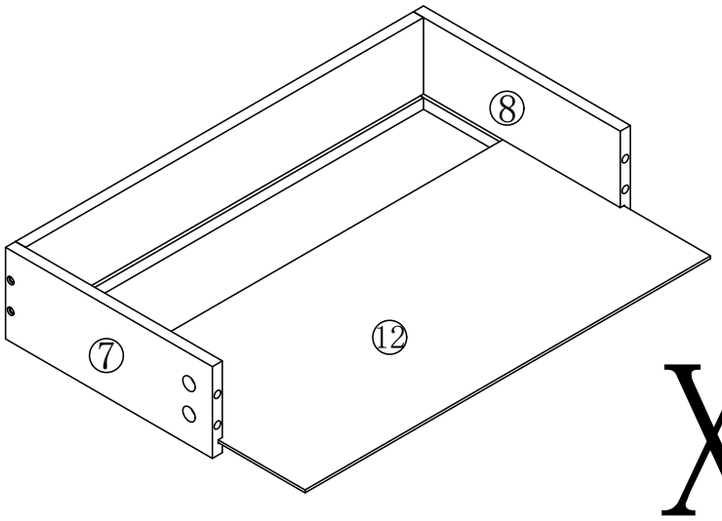

X2

11

A	×8
M6x35MM	

E	×4
M3x12MM	

J	×2

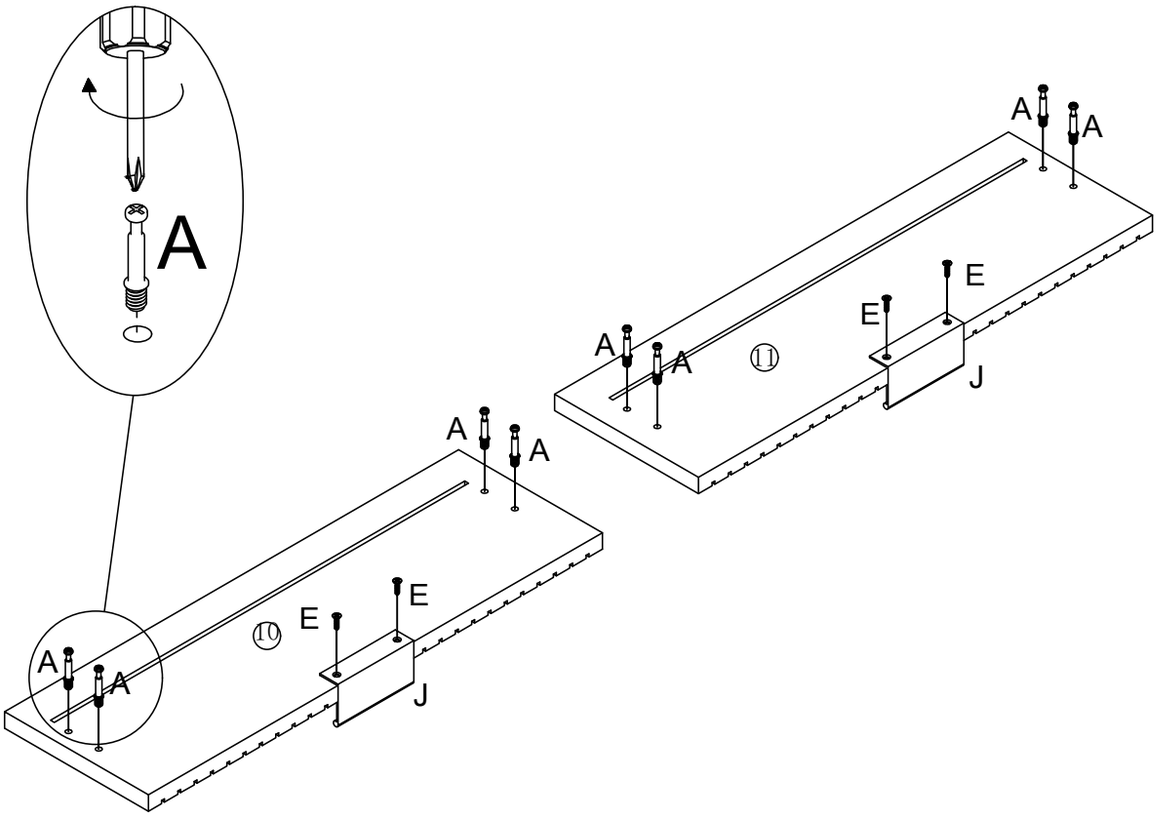

12

B	×8
φ15x10	

I	×8

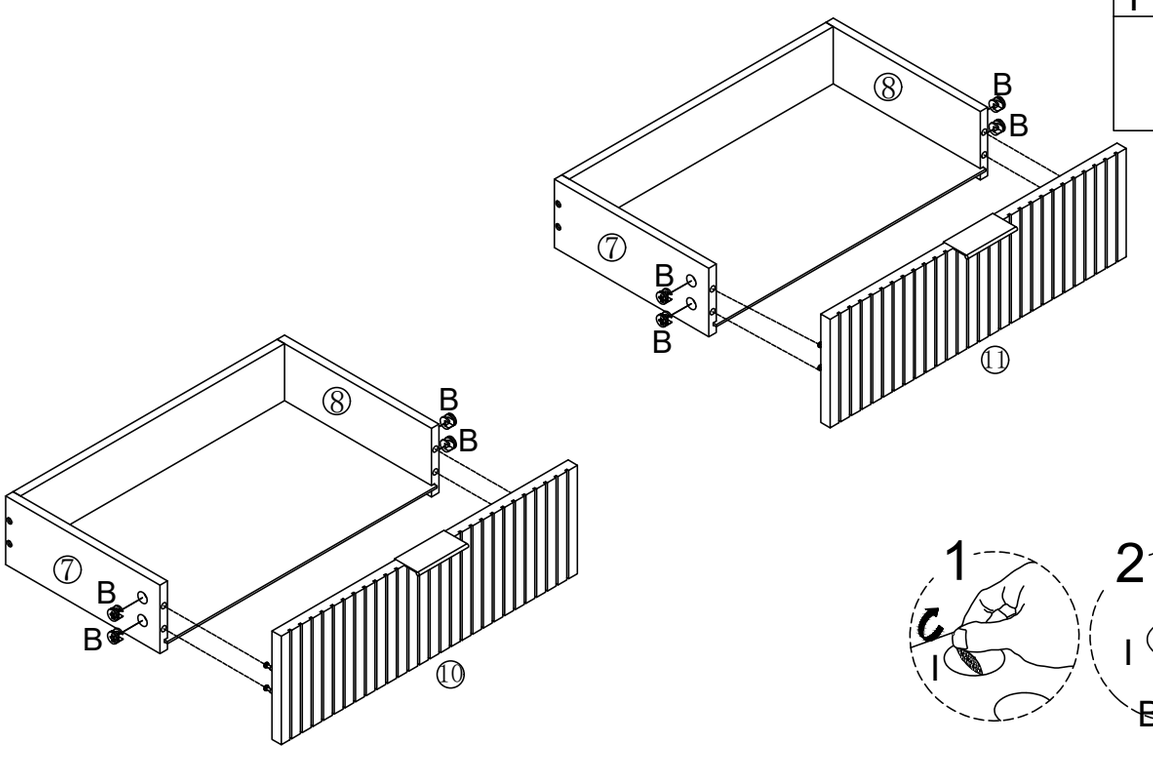

13

E	×8	DL	×2	DR	×2
M3x12MM					

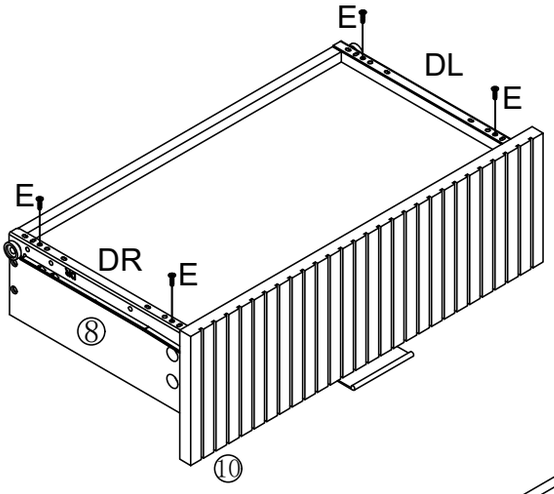

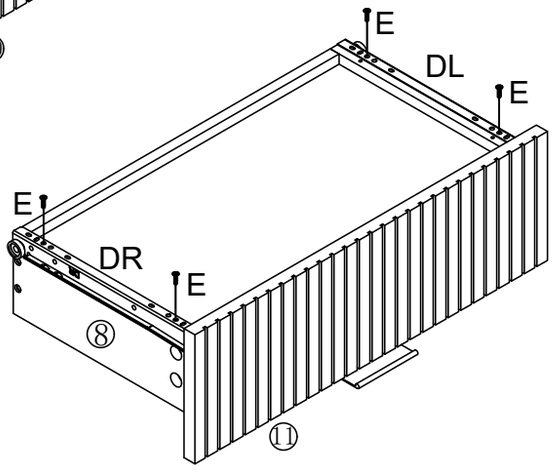



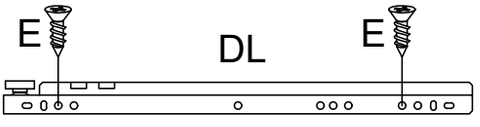

14

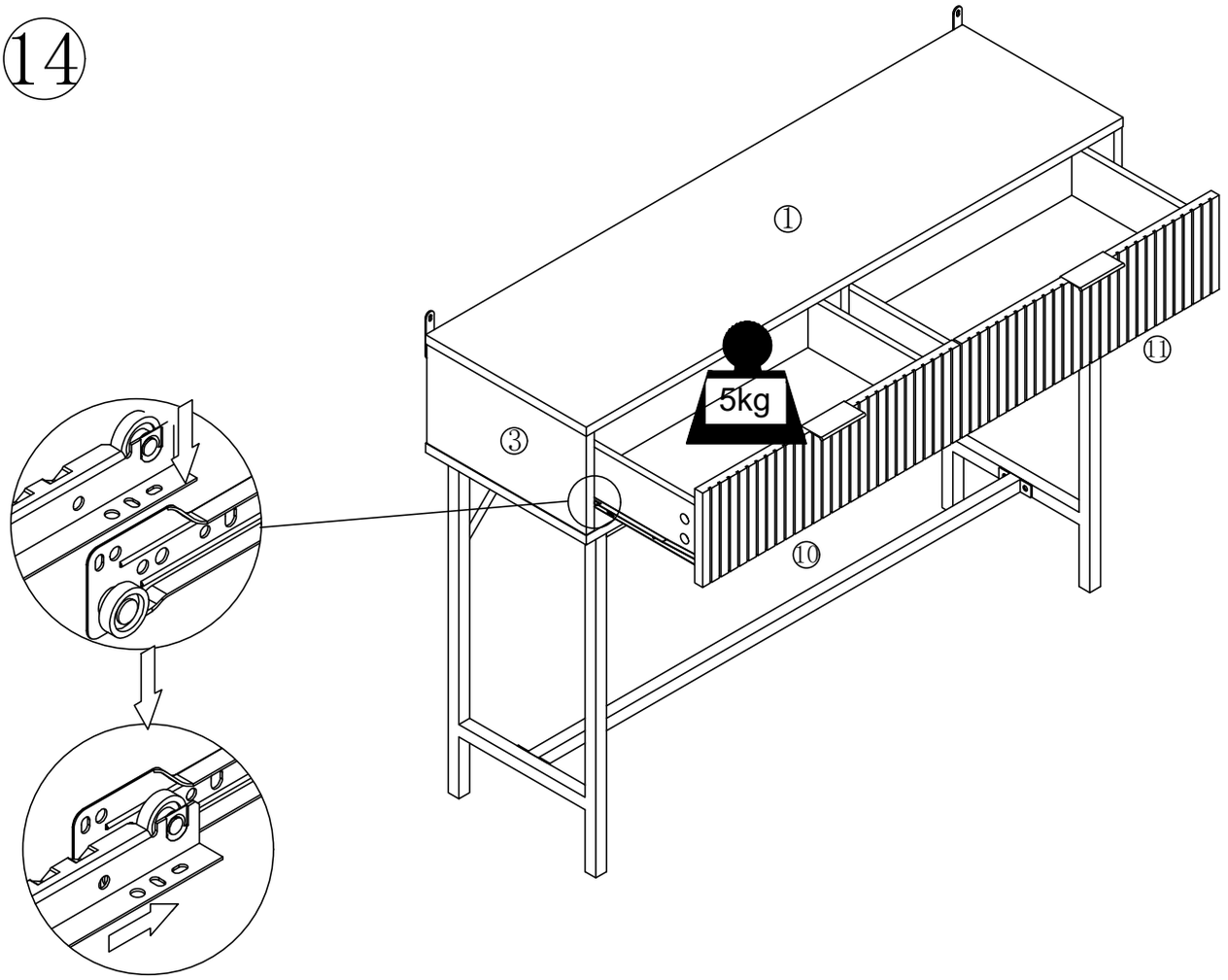

15

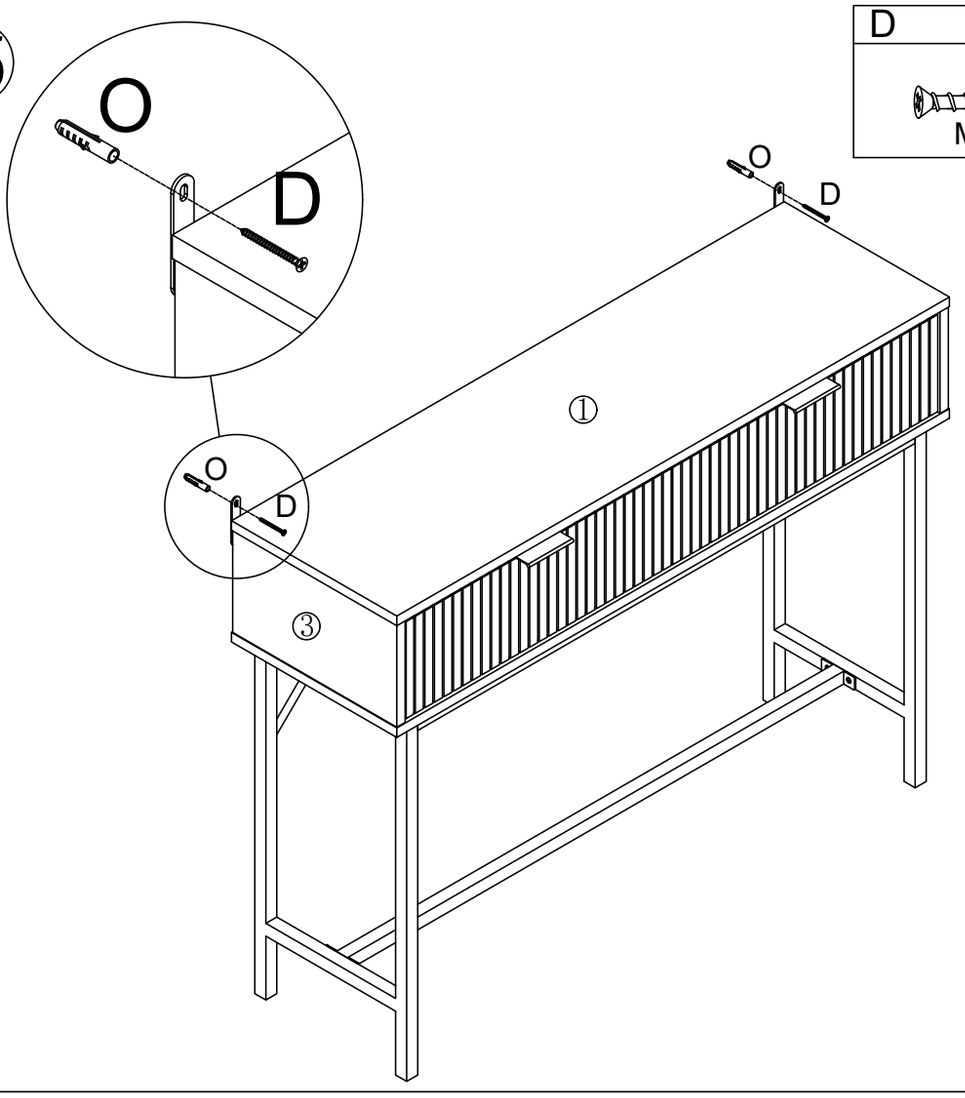

D	×2
M4x40MM	

O	×2

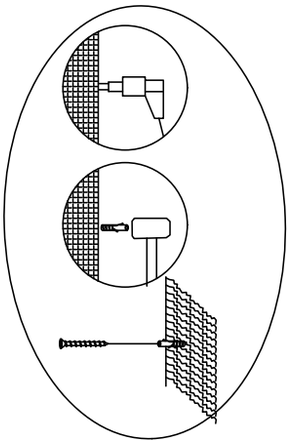

16

