MAXIM- SCHUHSCHRANK 2T1L

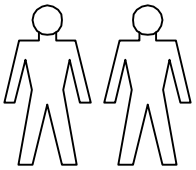

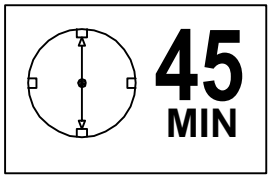

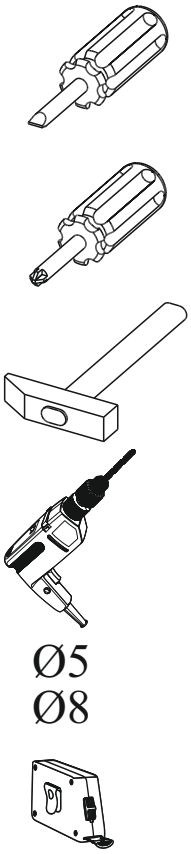

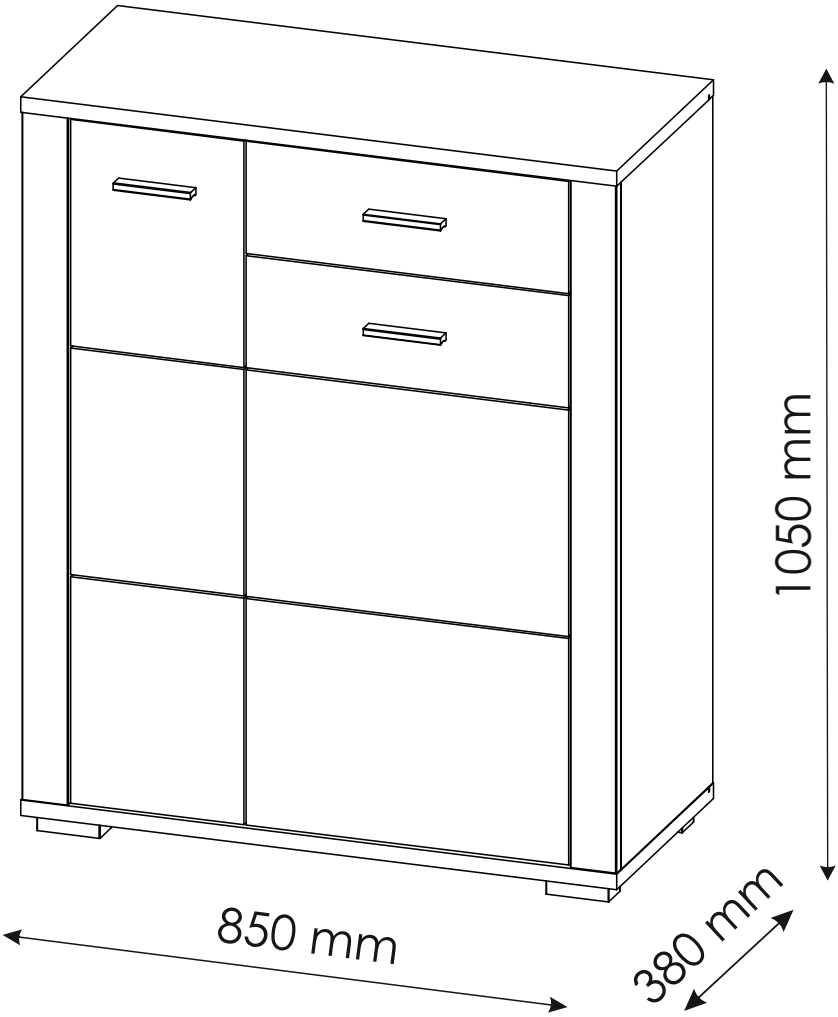

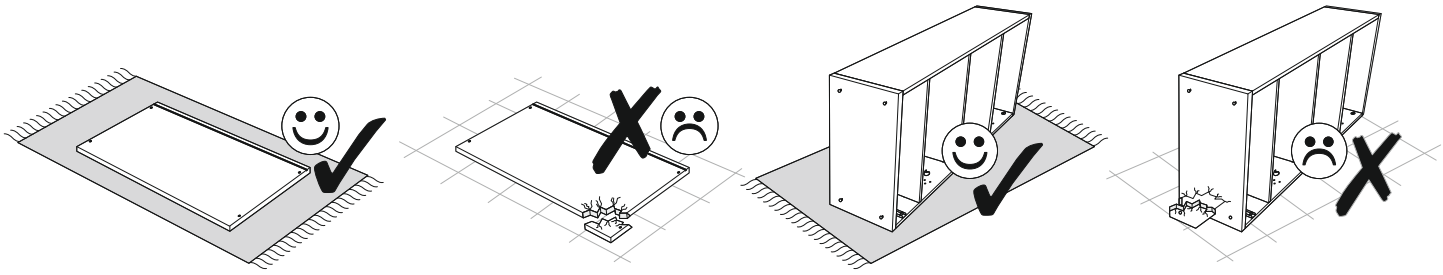

MAXIM- SCHUHSCHRANK 2T1L

B1 f 7 x 50 mm x6	B2 f 7 x 70 mm x4	C0 x20
C2 x12	C5 x8	D0 3 x 15 mm x16
D10 4 x 16 mm x8	D14 4 x 35 mm x12	D4 3,5 x 18 mm x24
D21 5 x 13 mm x13	D16 4 x 30 mm x6	E0 5 x 50 mm 8 x 50 mm x1
J36 x4	K 4mm x1	L7 L-110 x3
M1 x16	N6 L-300 x1	P0 x1
P27 x6	Q0 x12	U0 x4
U10 x8 14x8x3	T2 x4	

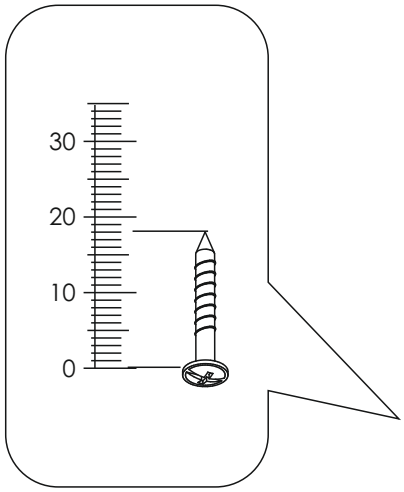

MAXIM- SCHUHSCHRANK 2T1L

1	981	360	16	1	2/2
2	981	360	16	1	2/2
3	154	340	16	1	2/2
4	154	340	16	1	2/2
5	850	380	22	1	1/2
6	850	380	22	1	1/2
7	816	340	16	3	1/2
8	816	340	16	1	1/2
9	247	323	16	1	2/2
10	247	323	16	1	2/2
11	247	323	16	1	2/2
12	460	160	16	1	2/2

13	460	323	16	1	2/2
14	460	323	16	1	2/2
15	460	160	16	1	2/2
16	300	120	16	1	2/2
17	401	119	16	1	2/2
18	300	120	16	1	2/2
19	980	66	16	1	2/2
20	980	66	16	1	2/2
21	413	294	3	1	2/2
22	991	413	3	1	2/2
23	991	413	3	1	2/2
24					2/2

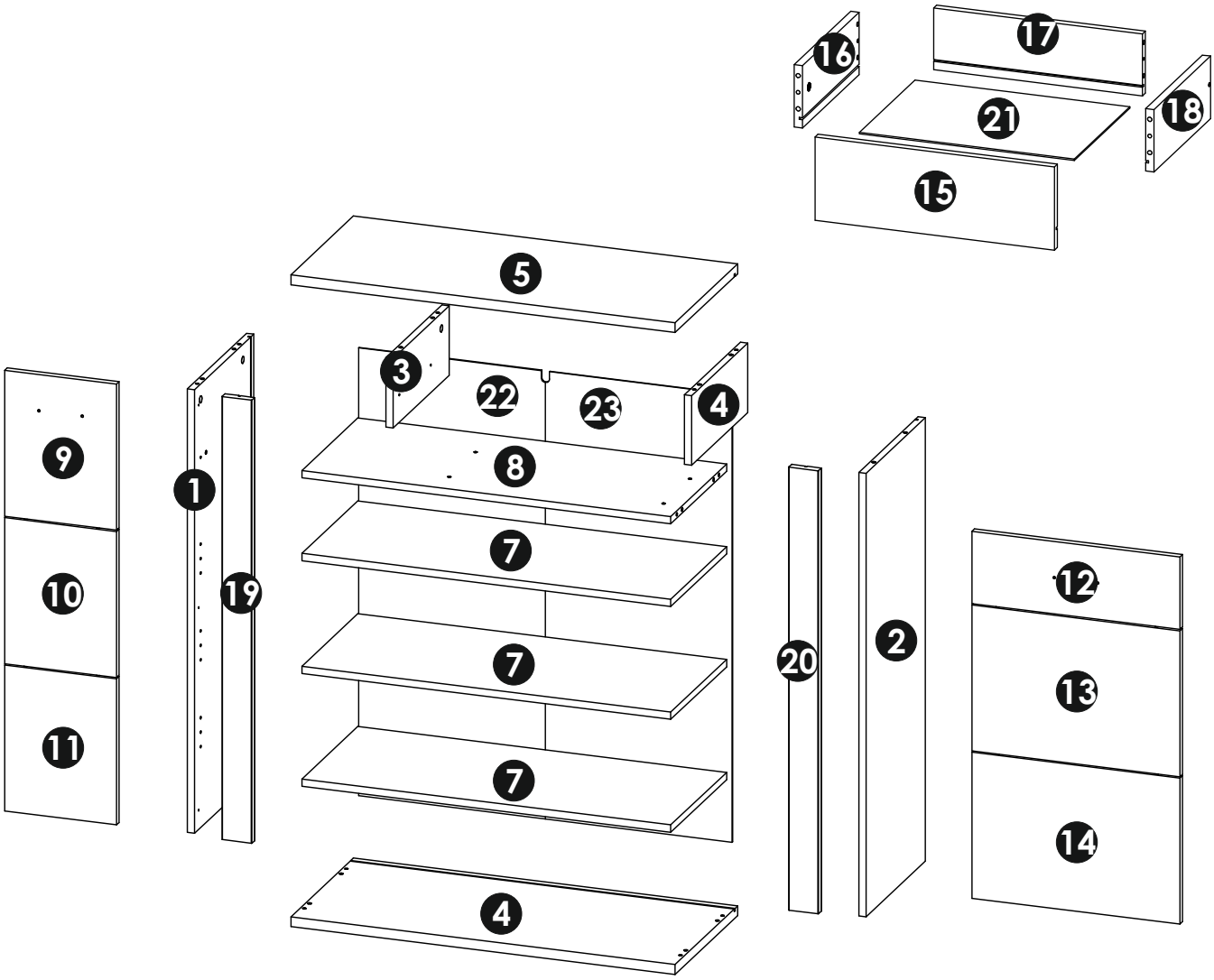

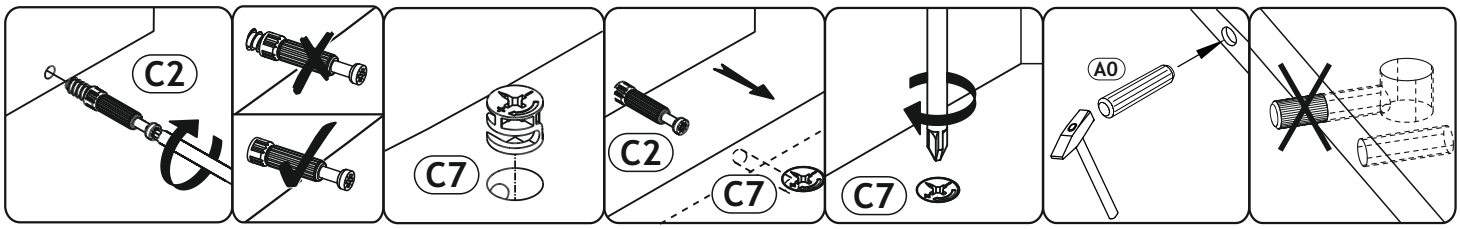

1

C2	D21	P0
x6	5 x 13 mm x1	x1

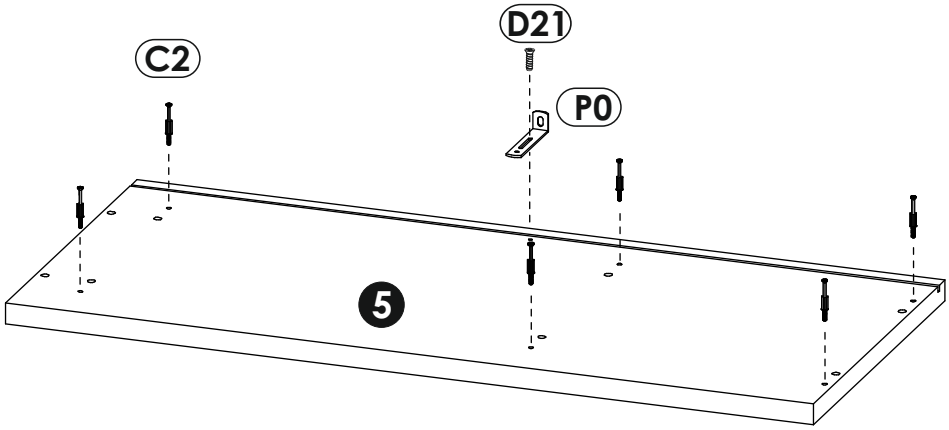

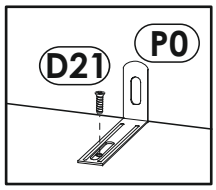

2

D4	P27	J36
3,5 x 18 mm x12	x6	x4

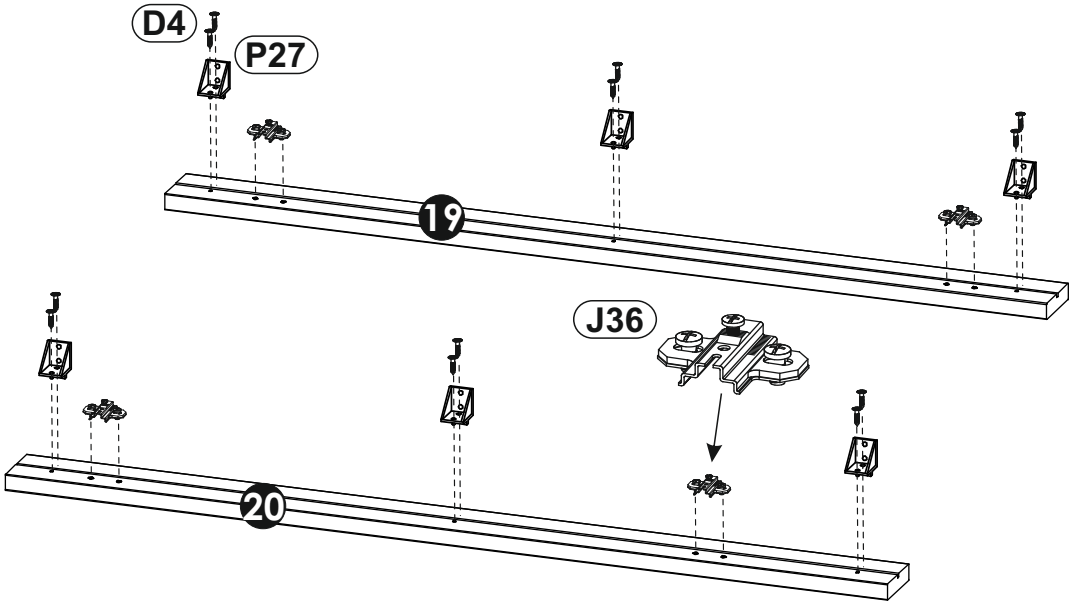

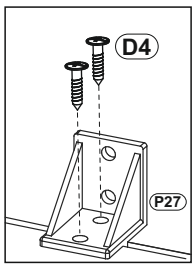

3

C2	Q0
x4	x12

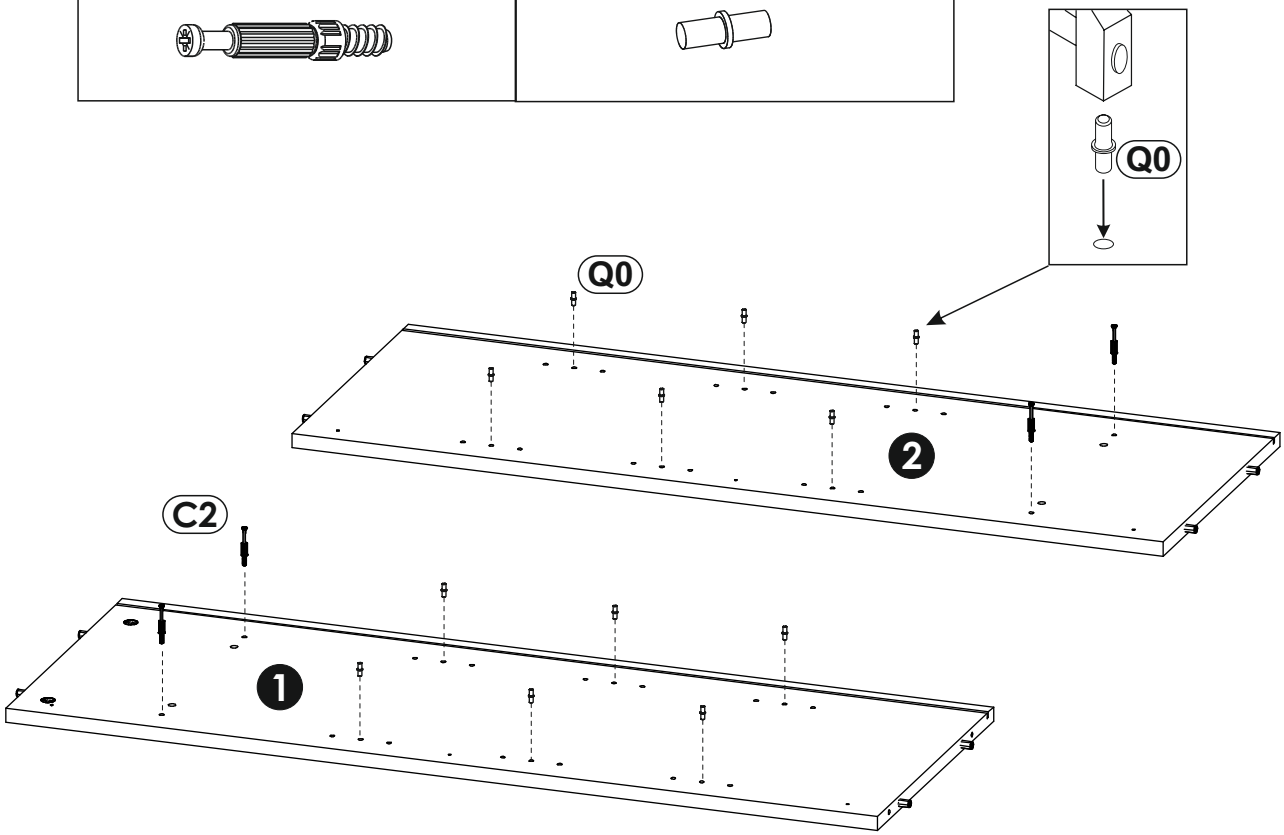

4

D21	N6
5 x 13 mm	L-300
x6	x1

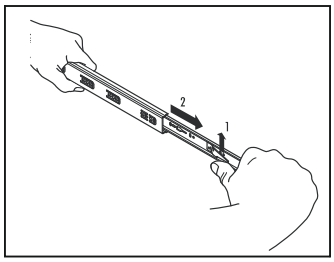

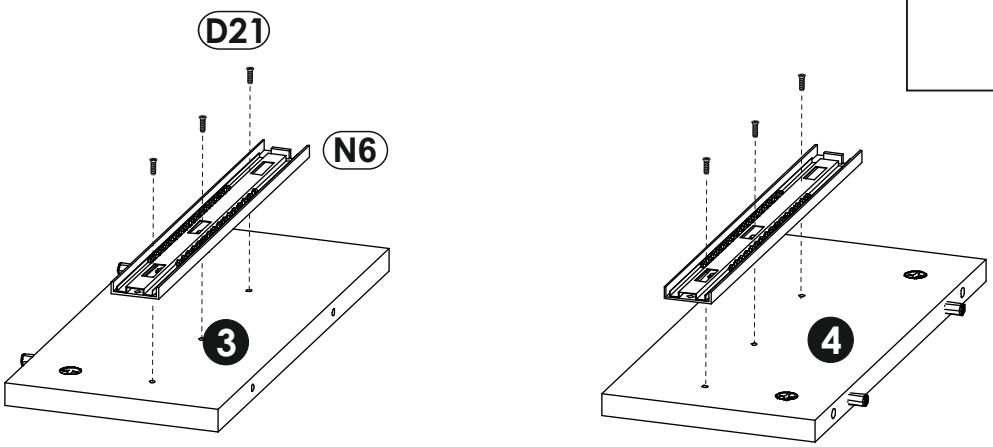

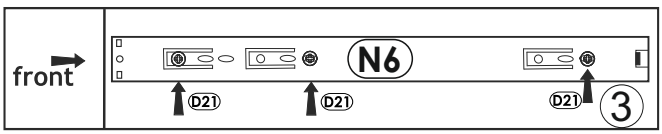

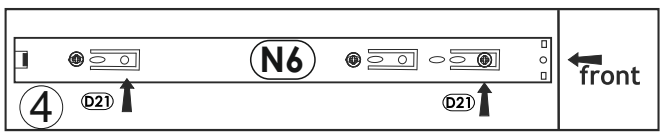

5

C2 x2	D21 5 x 13 mm x6	N6 L-300 x1
U0 x2	D16 4 x 30 mm x2	L7 L-110 x1

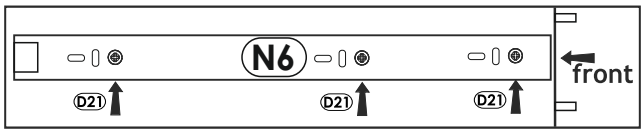

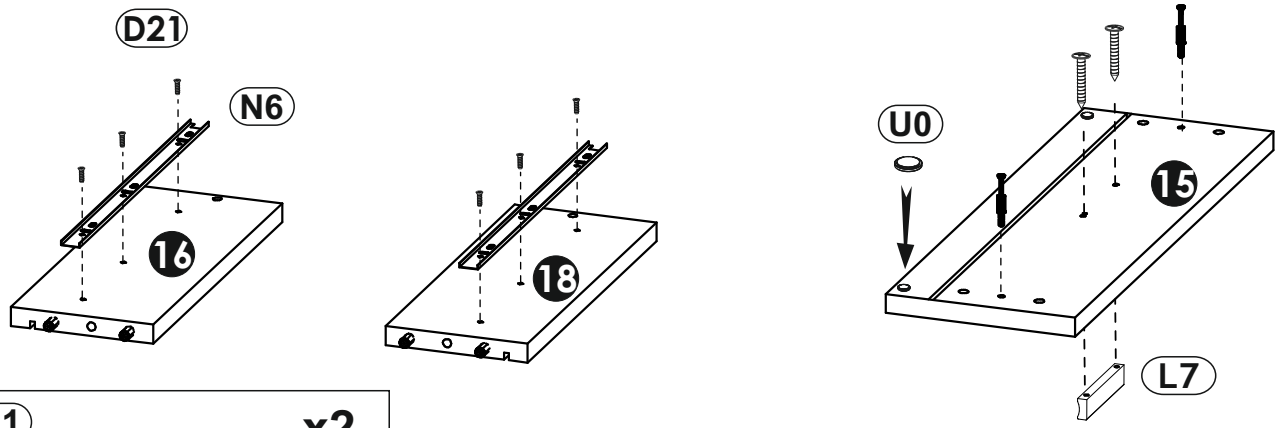

6

B1 f 7 x 50 mm x2

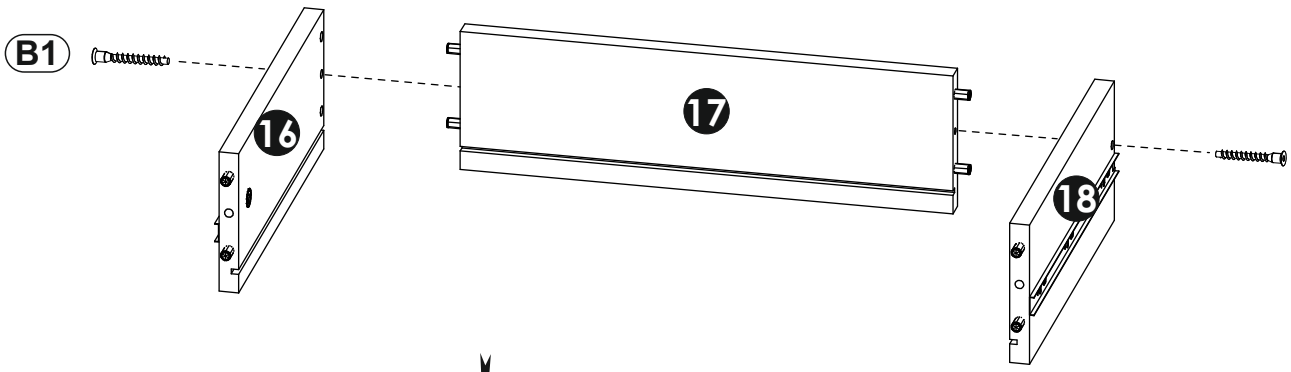

7

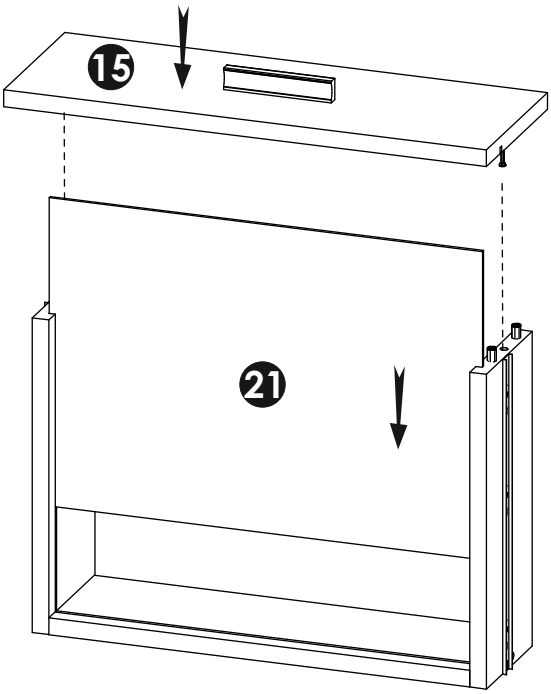

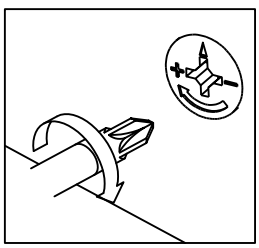

8

D0	M1
3 x 15 mm x4	x4

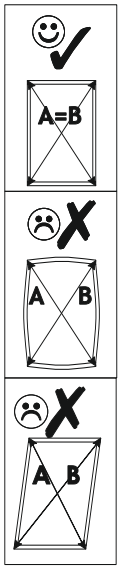

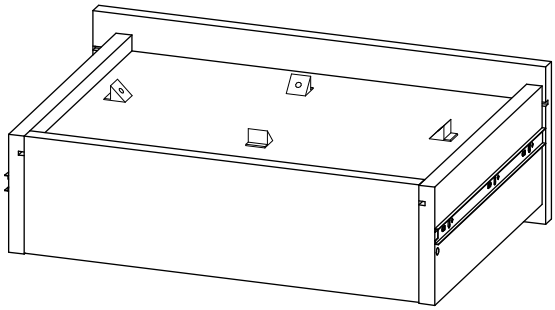

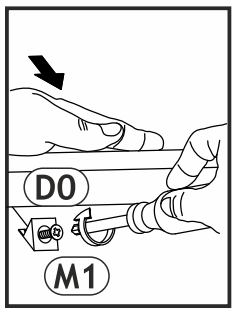

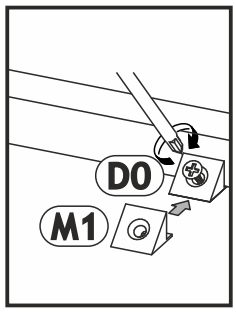

9

C5	U10
x8	x8
	14x8x3

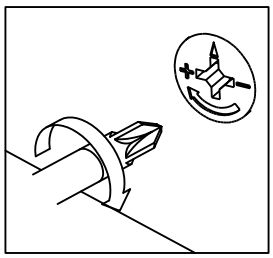

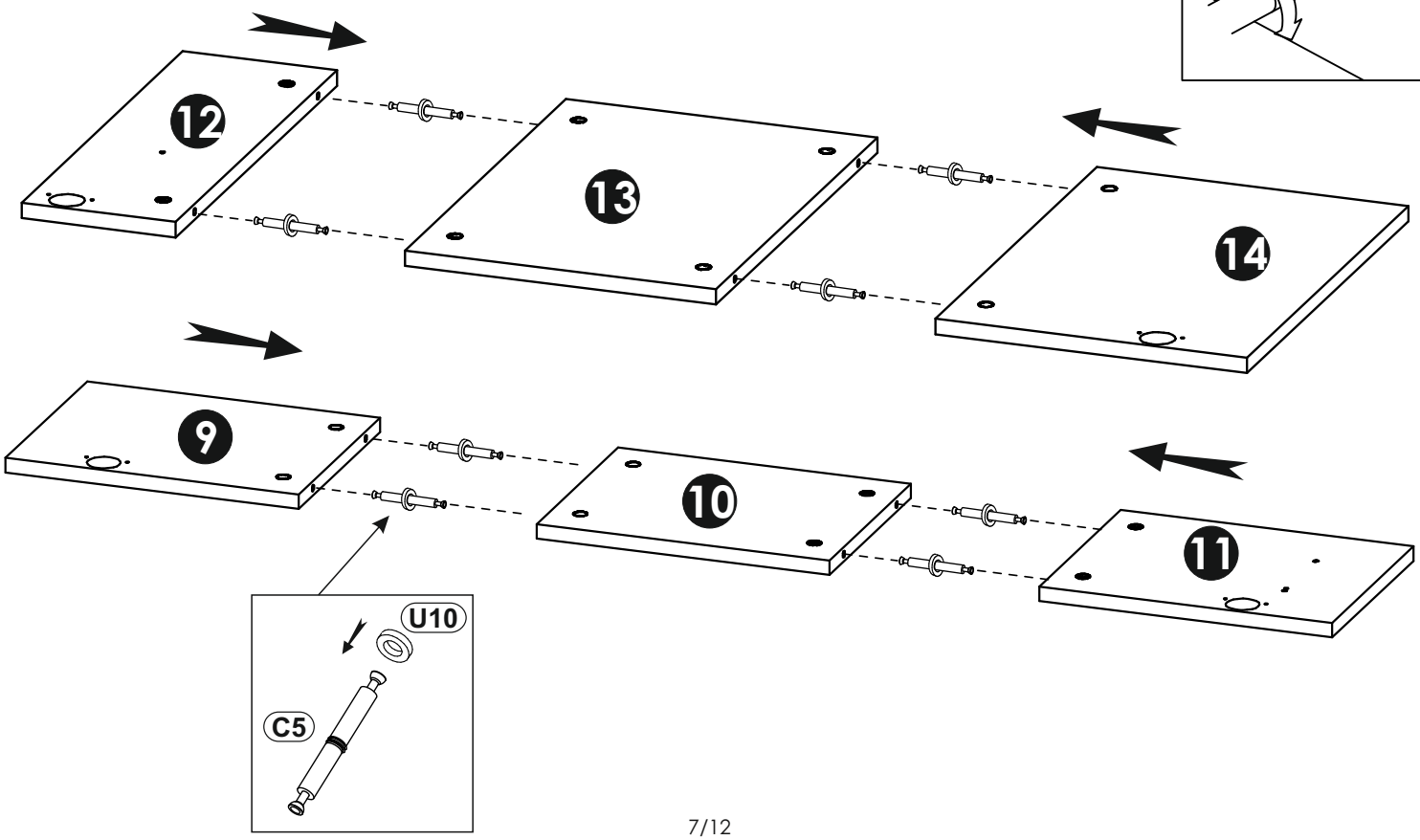

10

D10 4 x 16 mm x8	J36 x4	U0 x2
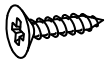	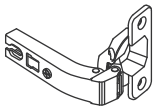	

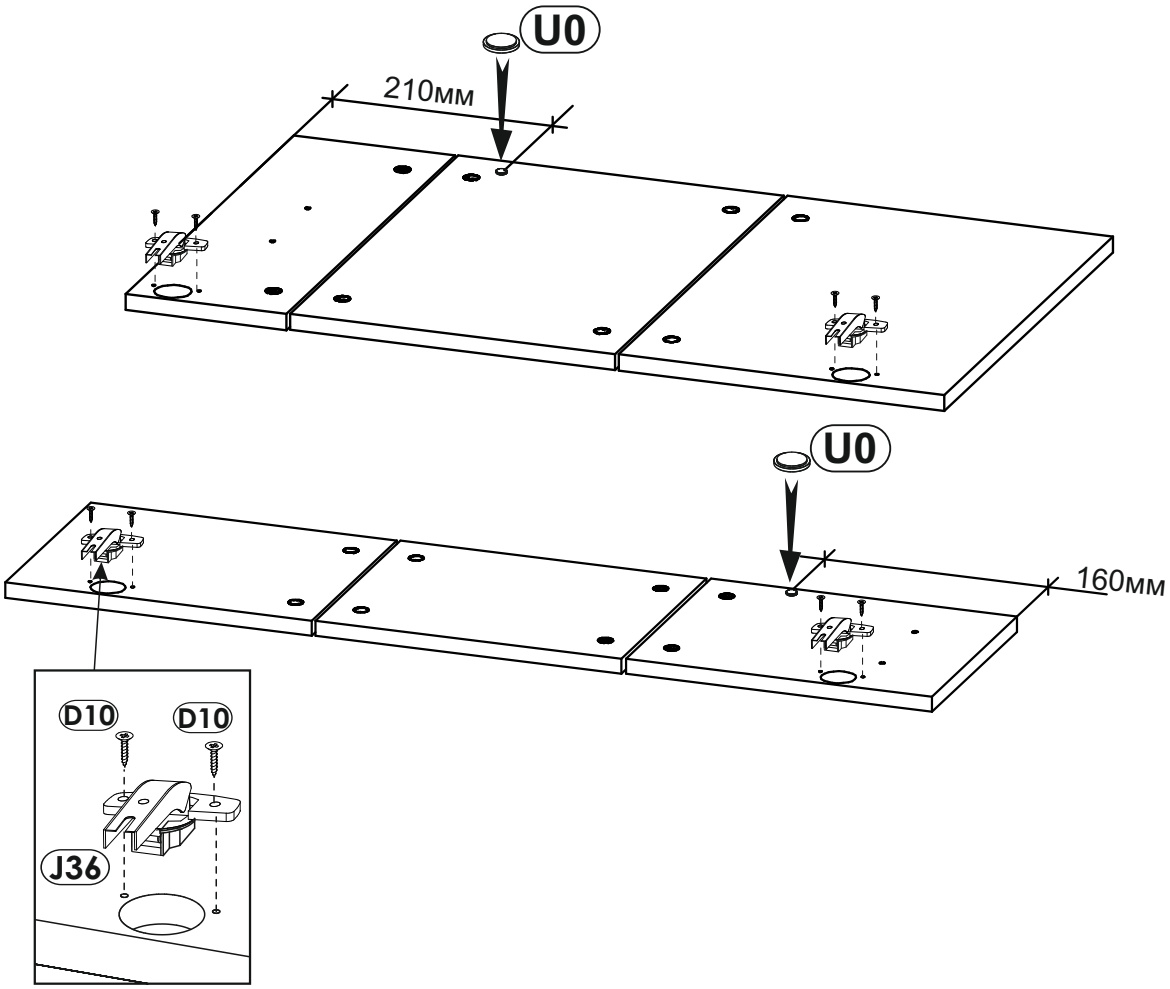

11

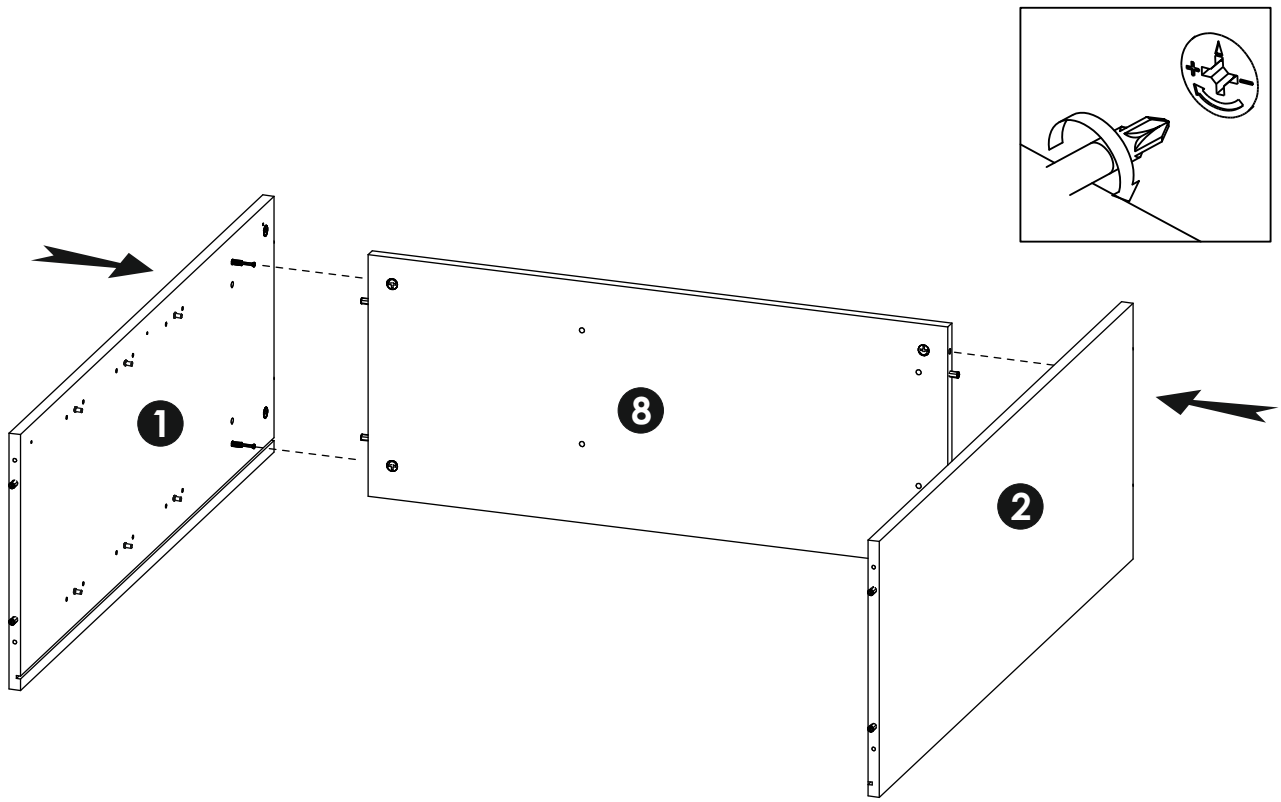

8

B1	B2	D14
f 7 x 50 mm x2	f 7 x 70 mm x4	4 x 35 mm x12

T2
x4

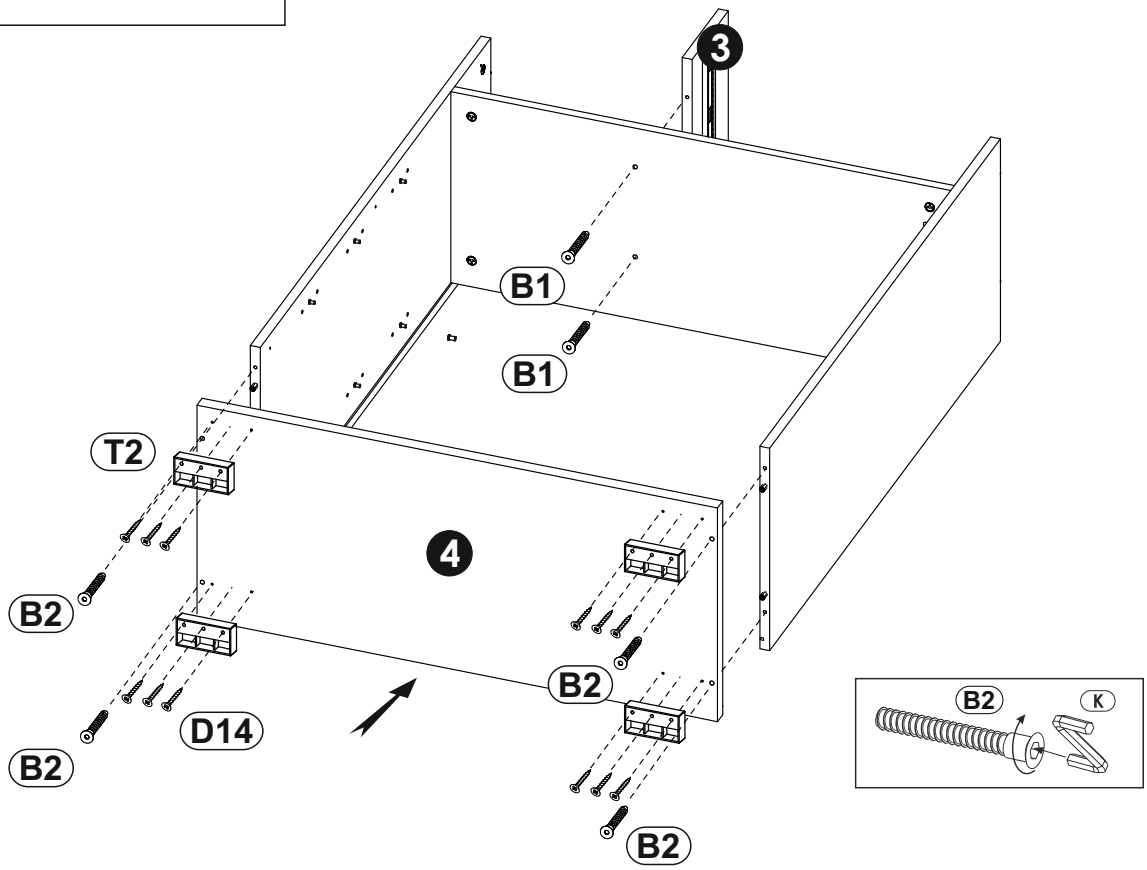

9

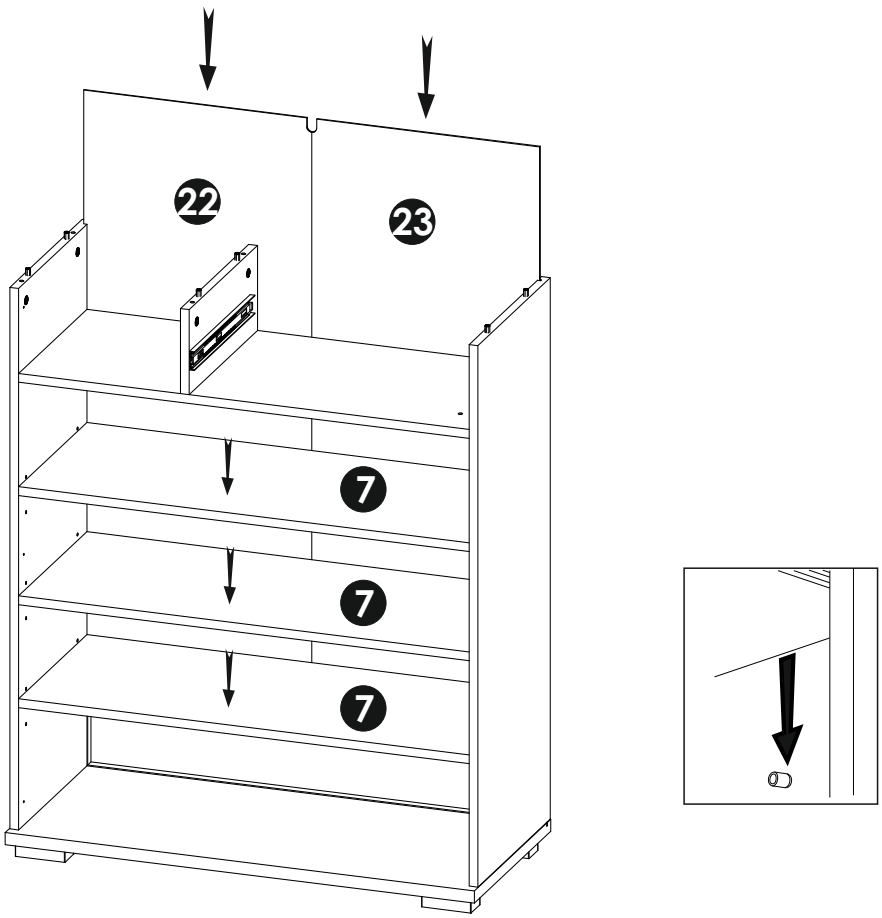

10

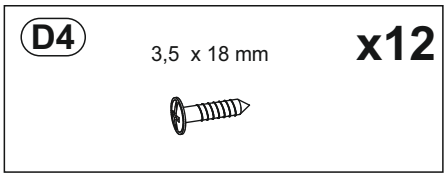

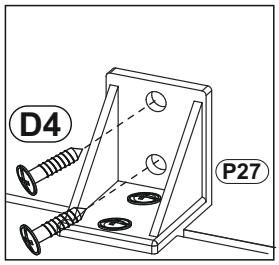

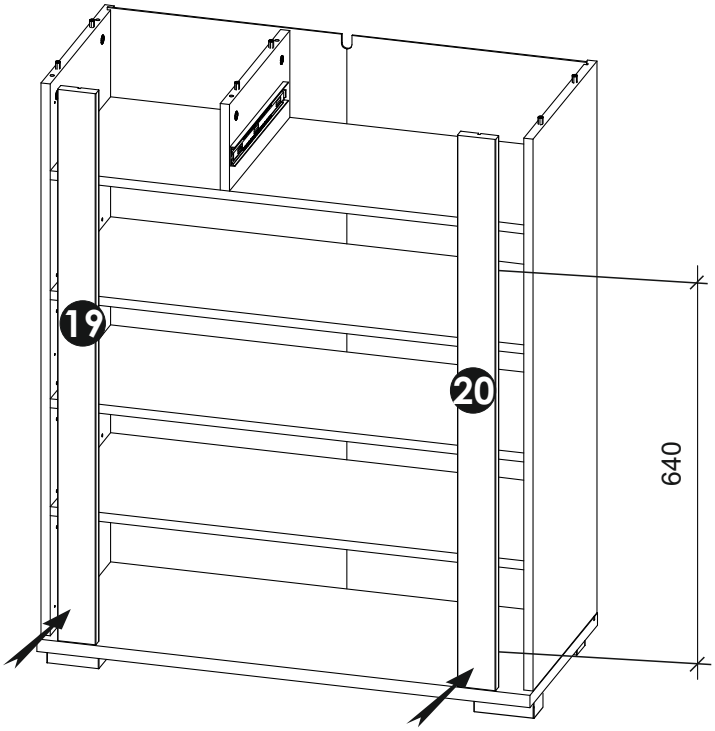

11

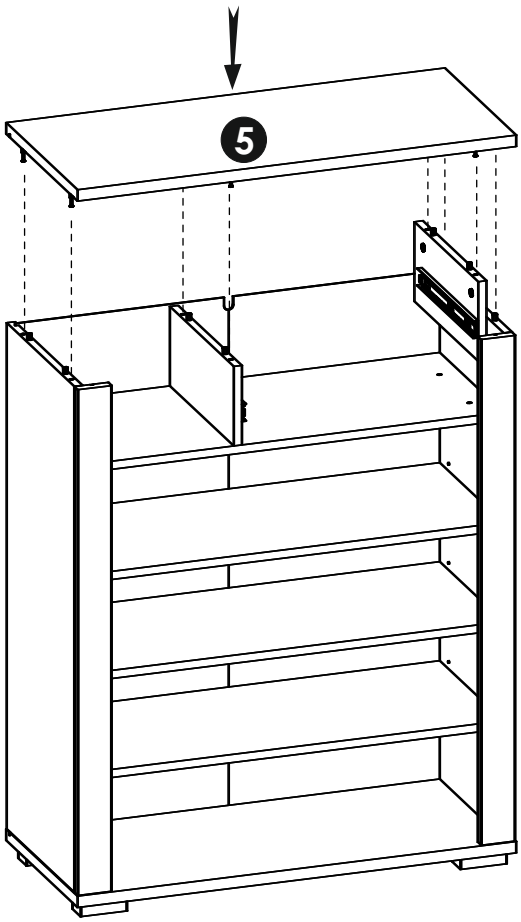

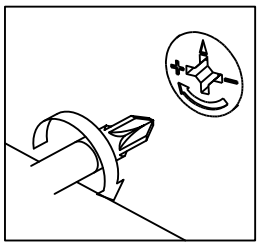

12

D0 3 x 15 mm x12	M1 x12

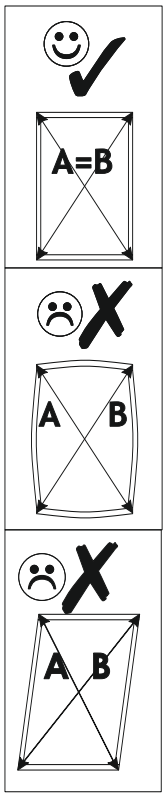

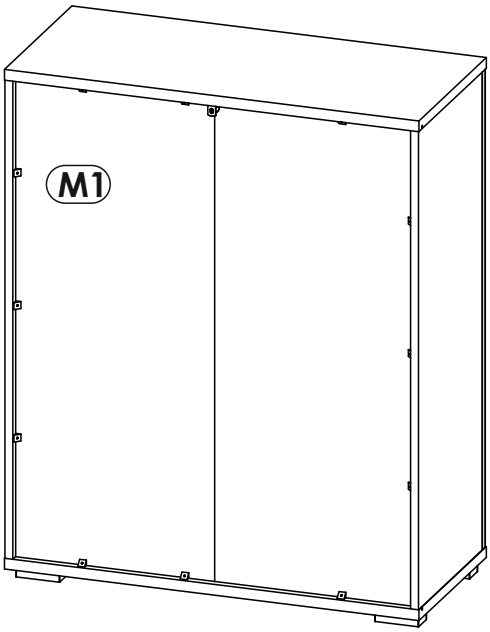

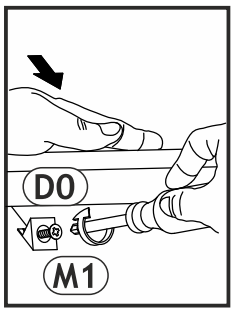

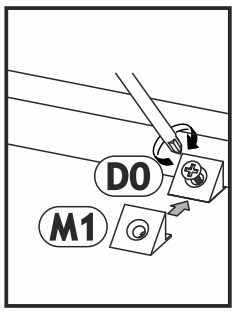

16

E0 5 x 50 mm 8 x 50 mm x1

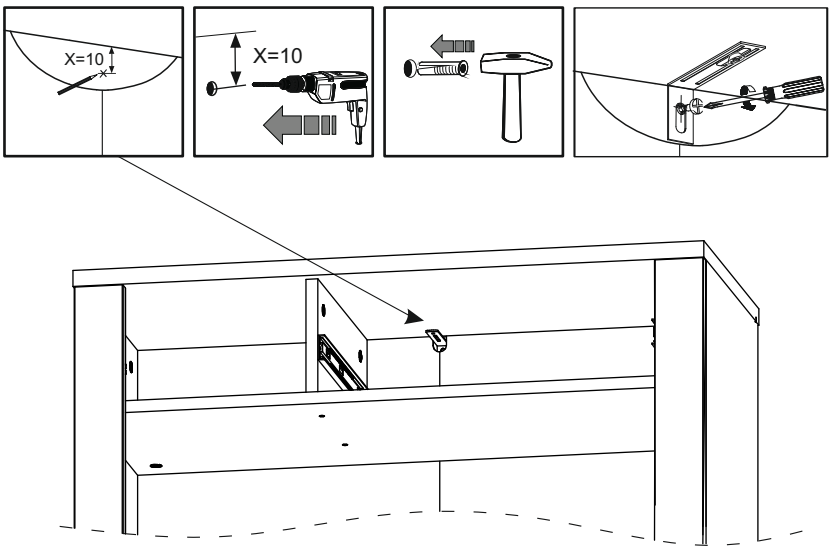

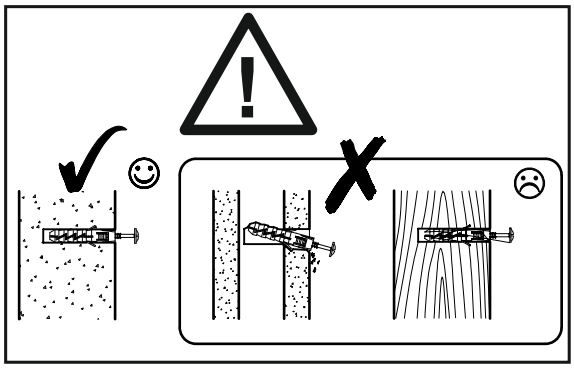

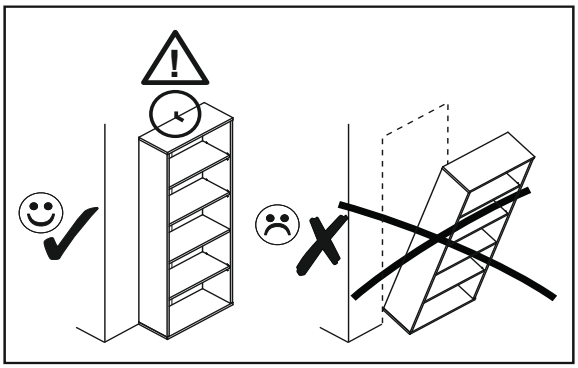

17

D16	L7
4 x 30 mm x4	L-110 x2

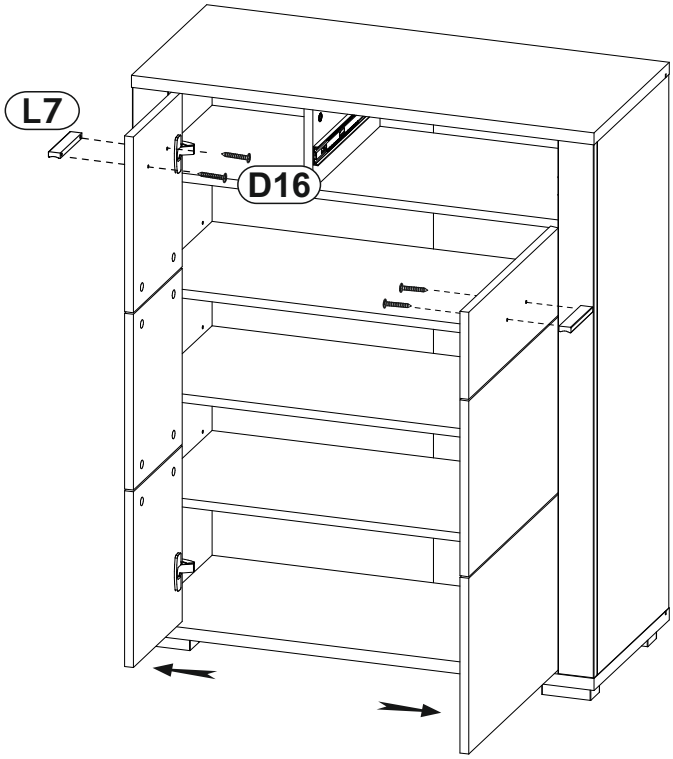

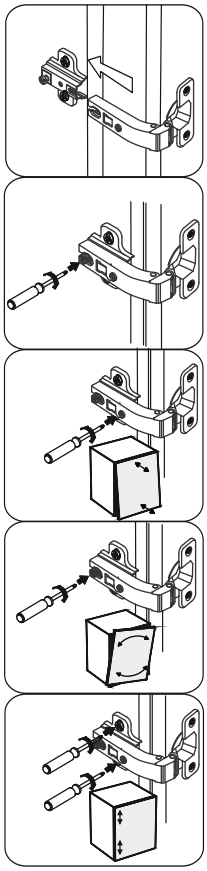

18
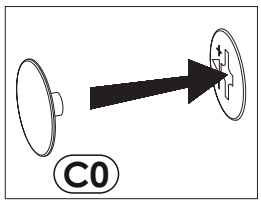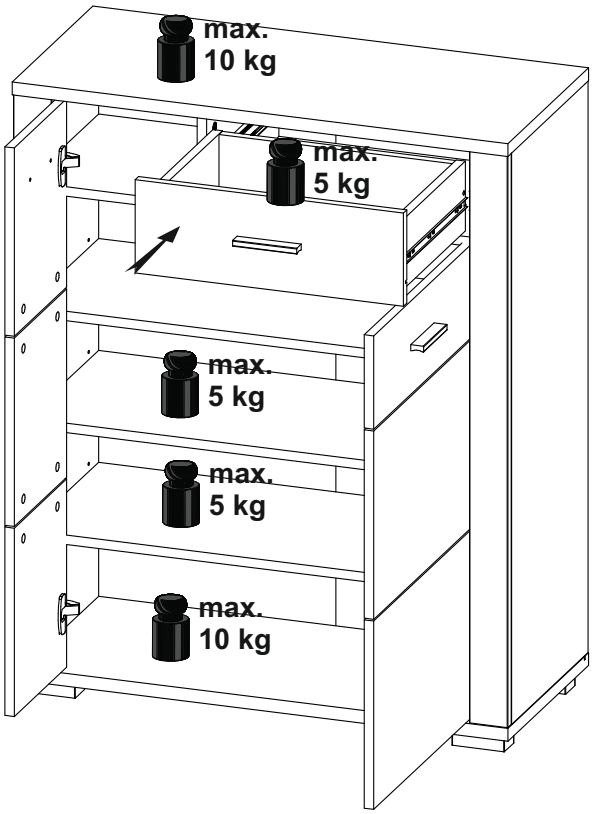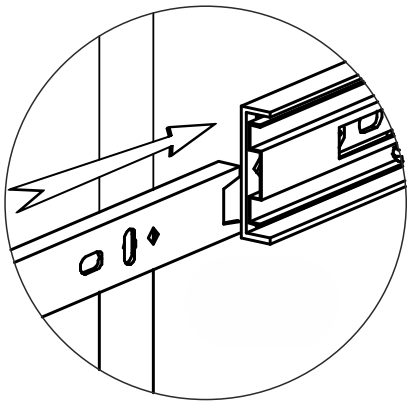
C0
x20