17130168-01
LOWBOARD

BDSK Handels GmbH & Co.KG
Mergentheimer Straße 59
DE-97084 Würzburg
E-Mail:Info@xxxlutz.at

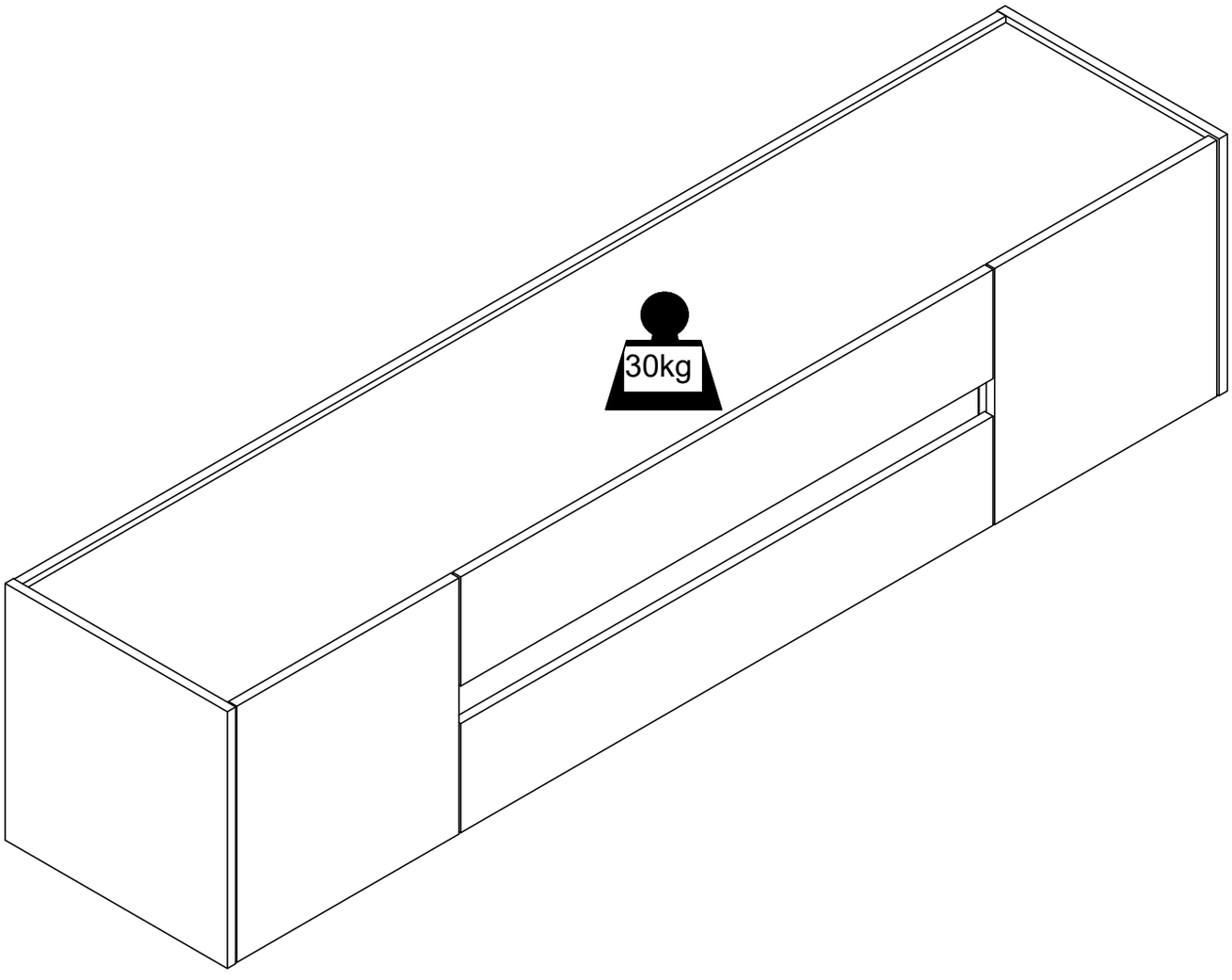

22
PAP

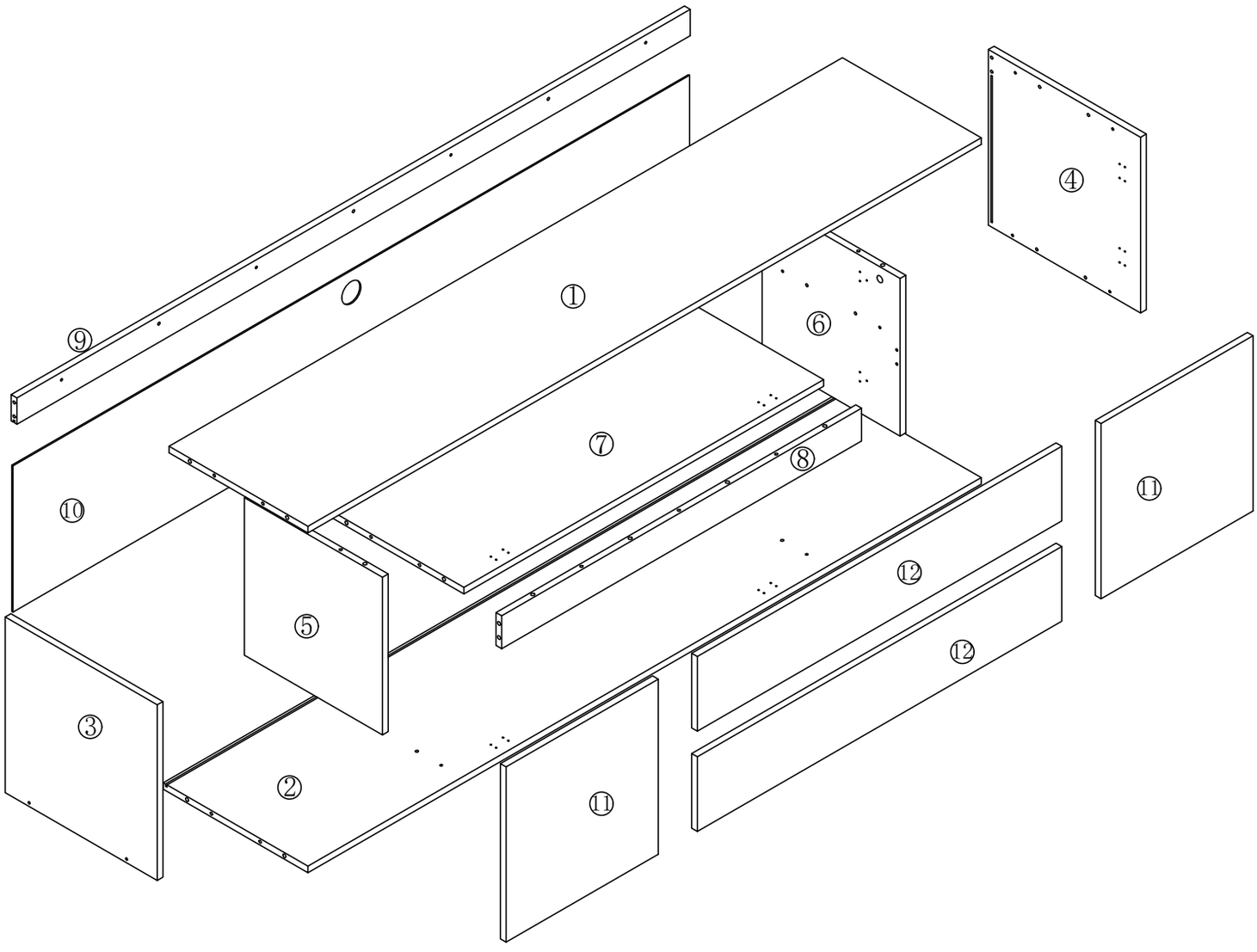

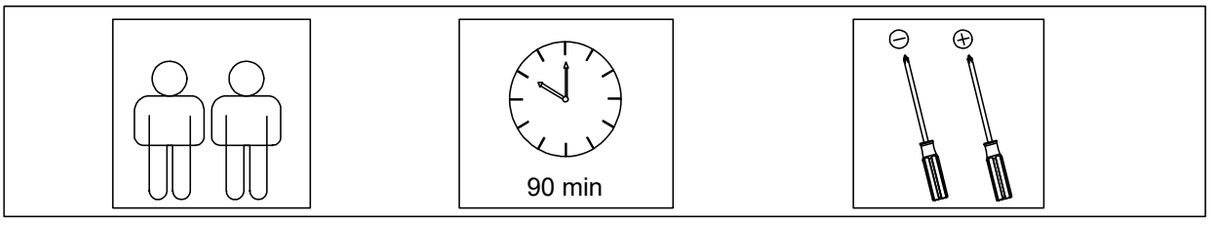

A ×20	B ×22	C ×35	D ×12	E ×80	F ×12	G ×4
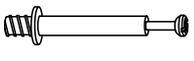		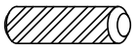	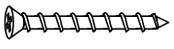		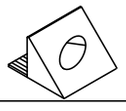	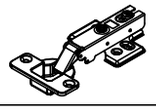
M6x35MM	φ15x10	Φ 6x30	M4x40MM	M3.5x14MM		

H ×4	I ×12	J ×2	K ×4	L ×2	M ×4	N ×8
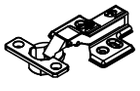		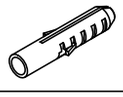	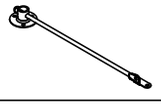	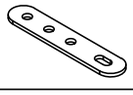		
						M3.5x20MM

O ×4	P ×8
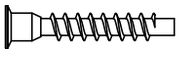	
M7x50MM	

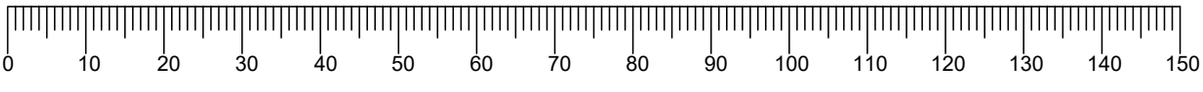

①

A	×20
M6x35MM	

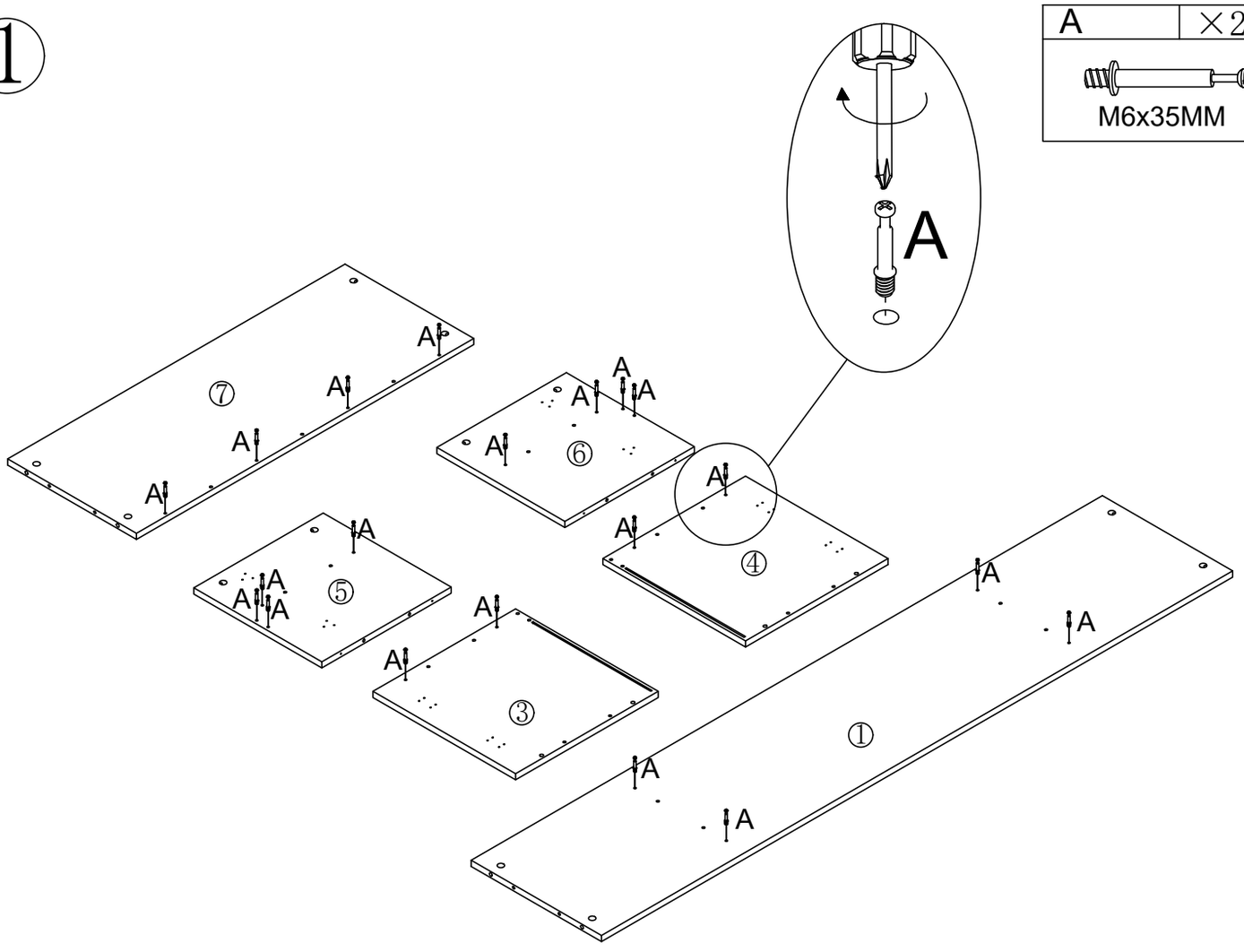

②

B	×4
φ15x10	

C	×3
φ6x30	

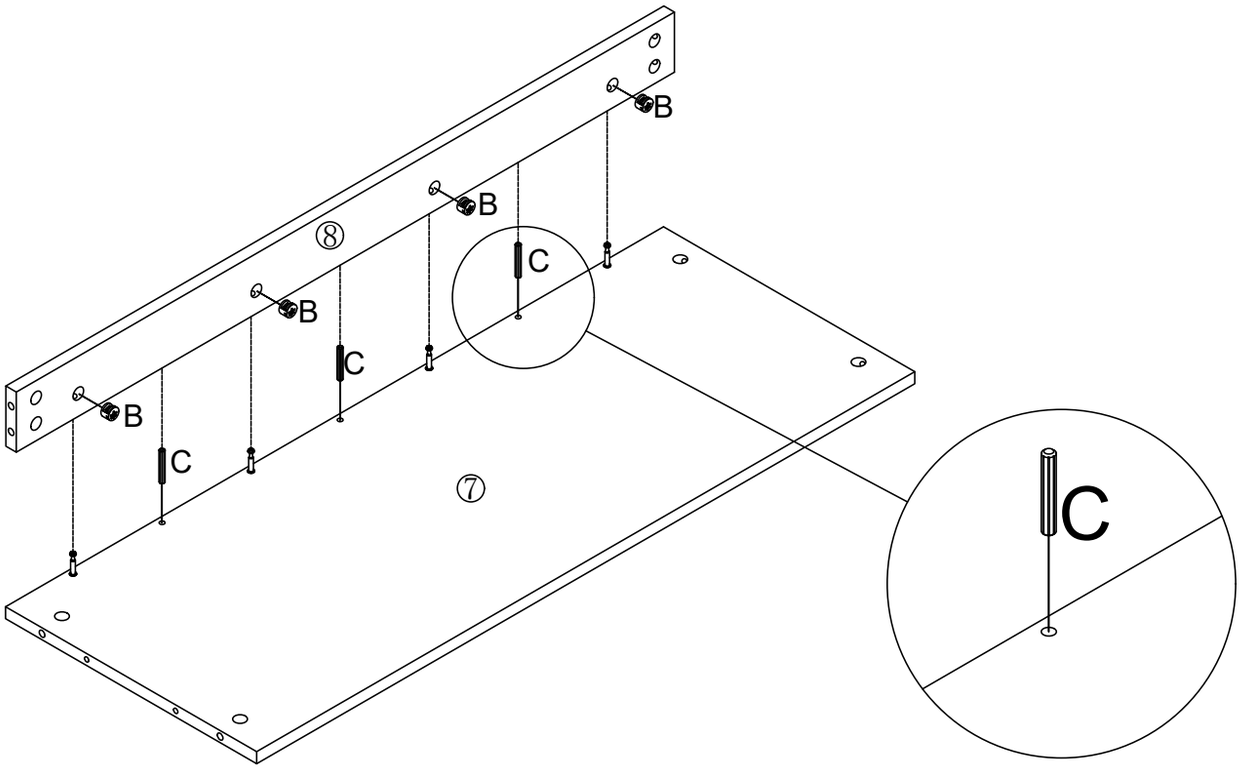

③

B	×8	C	×4
φ15x10		φ6x30	

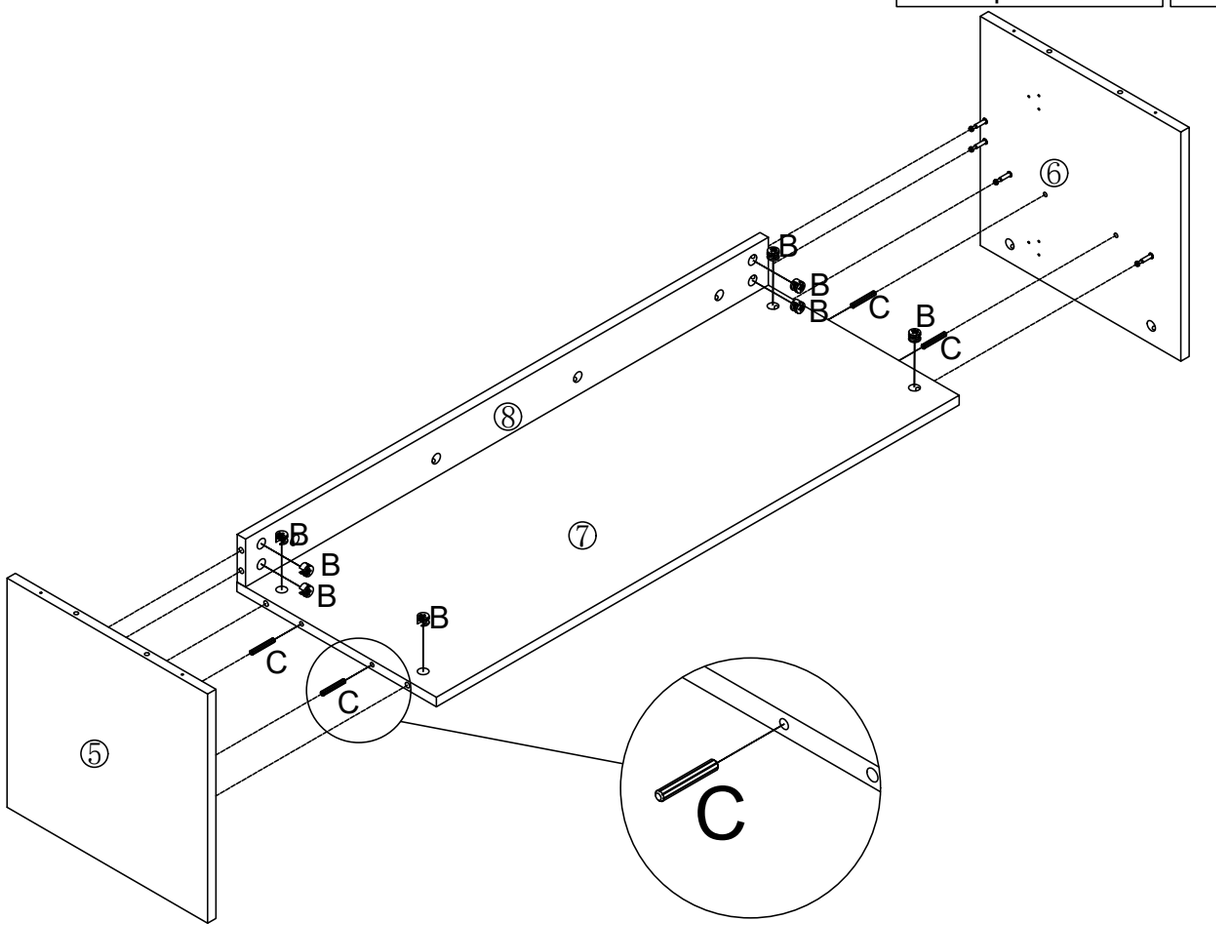

④

B	×4	C	×4
φ15x10		φ6x30	

I	×4

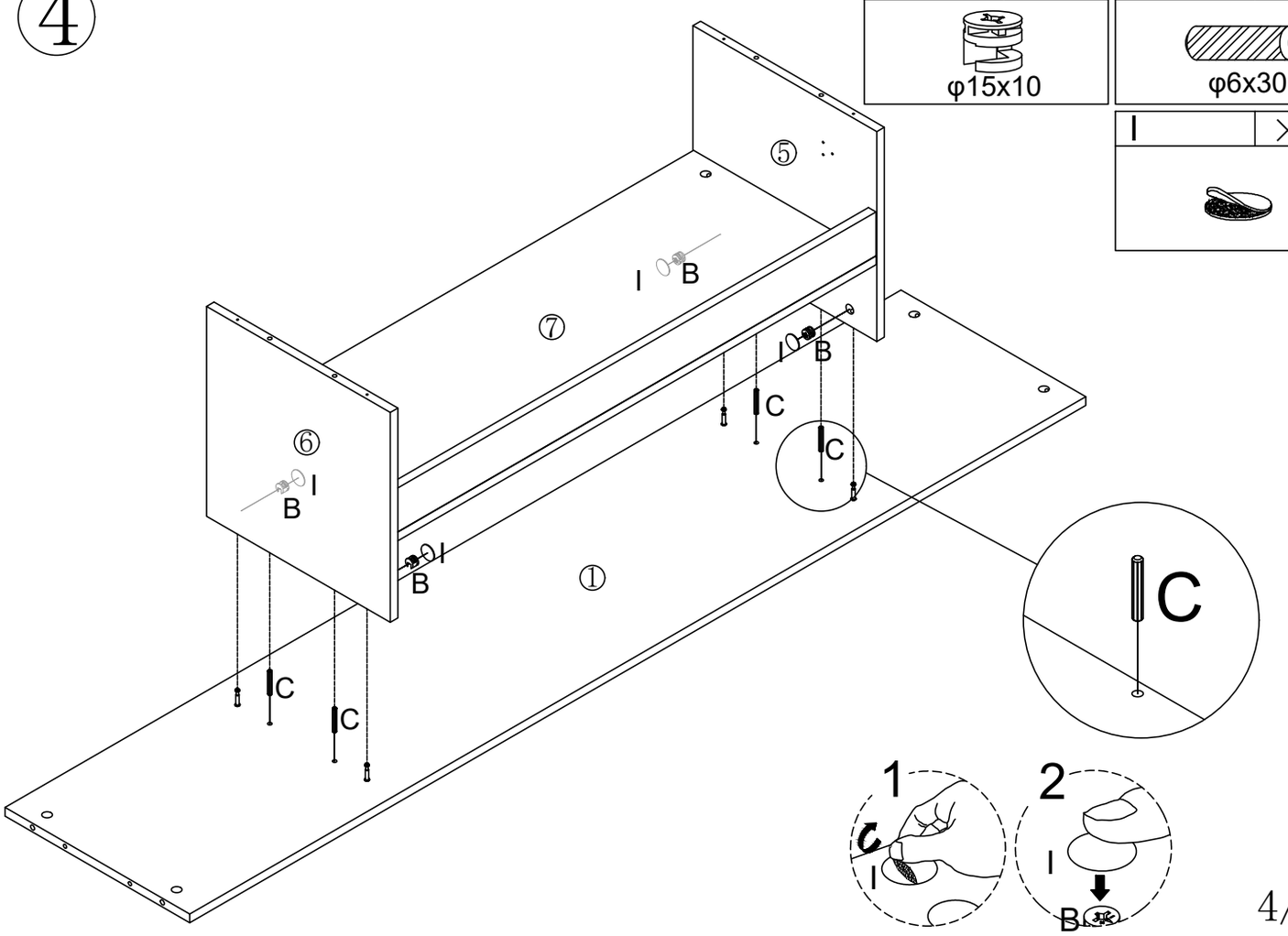

5

N	×8
M3.5x20MM	

P	×8

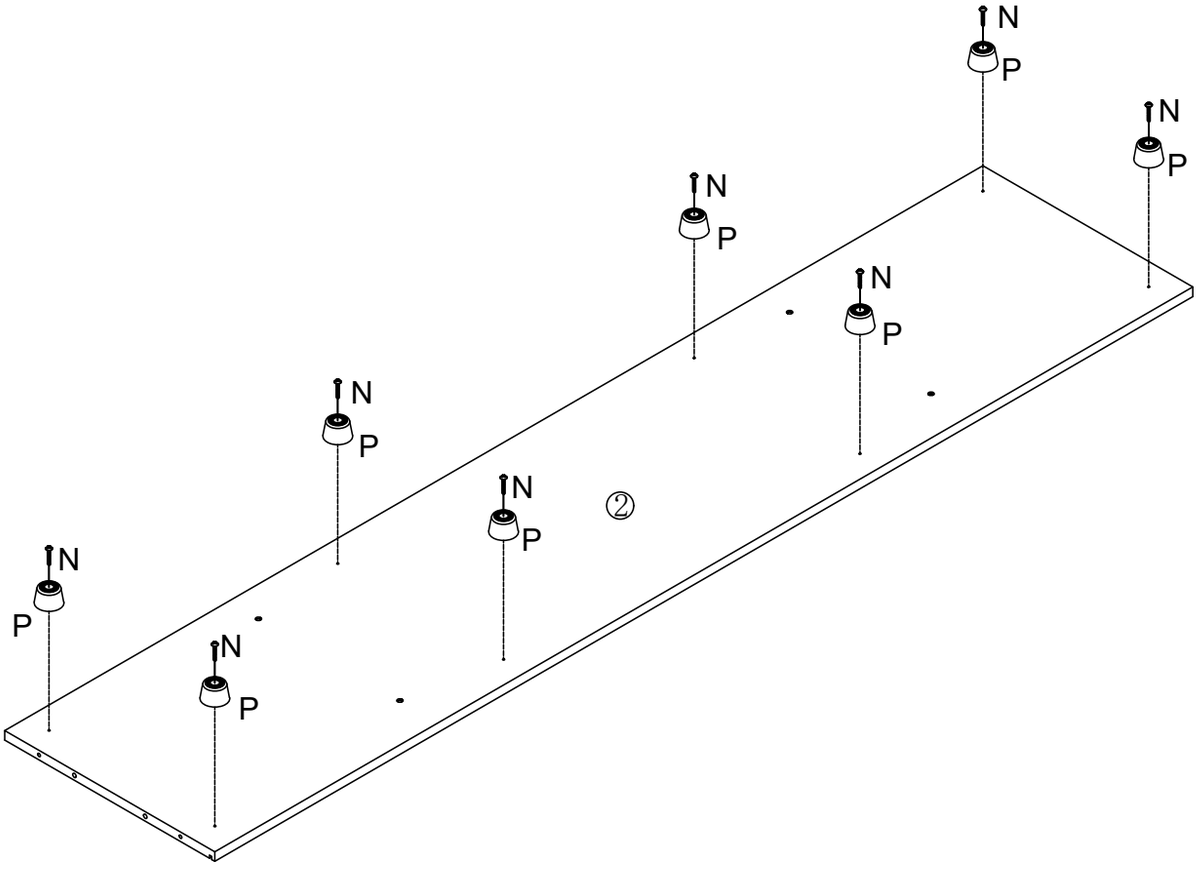

6

C	×6
φ6x30	

D	×4
M4x40MM	

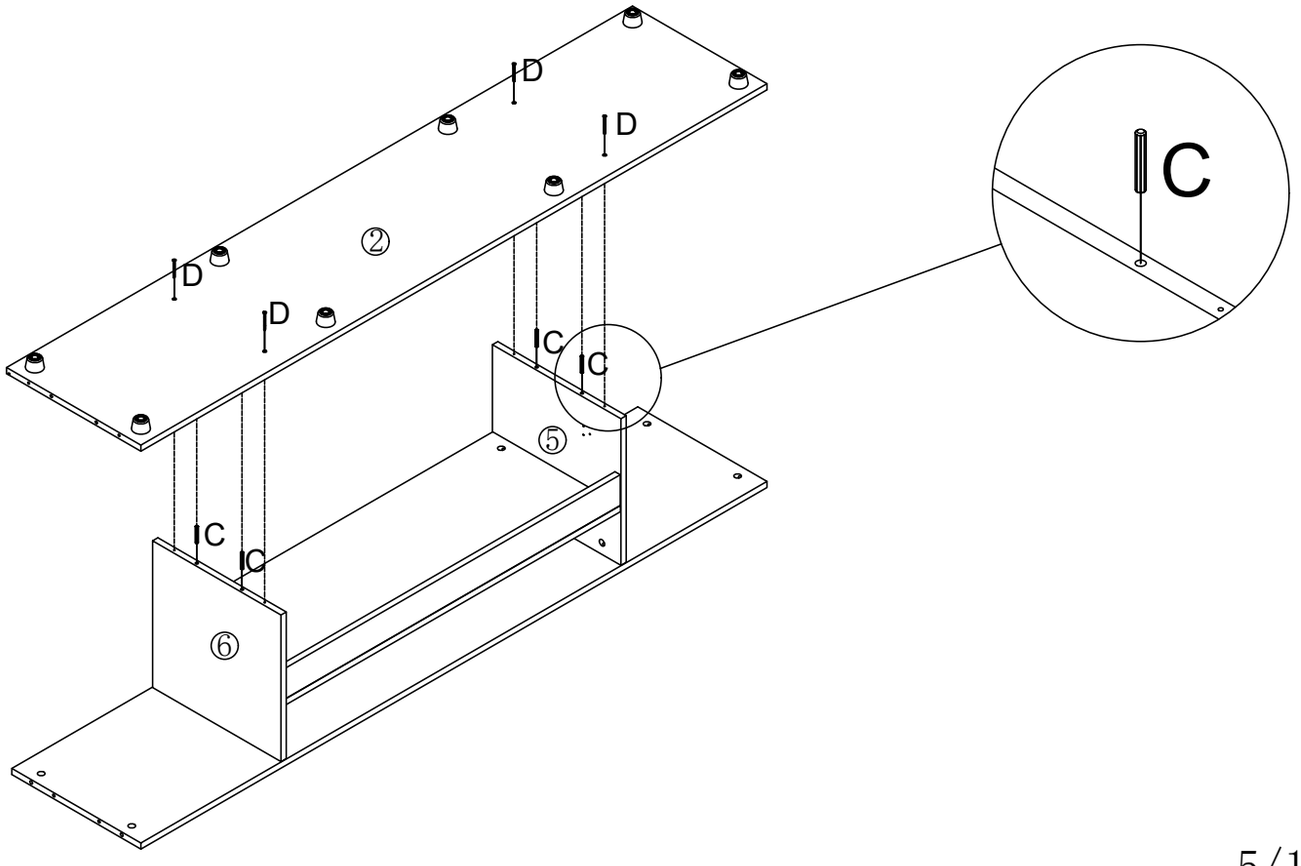

7

C	×6
φ6x30	

D	×6
M4x40MM	

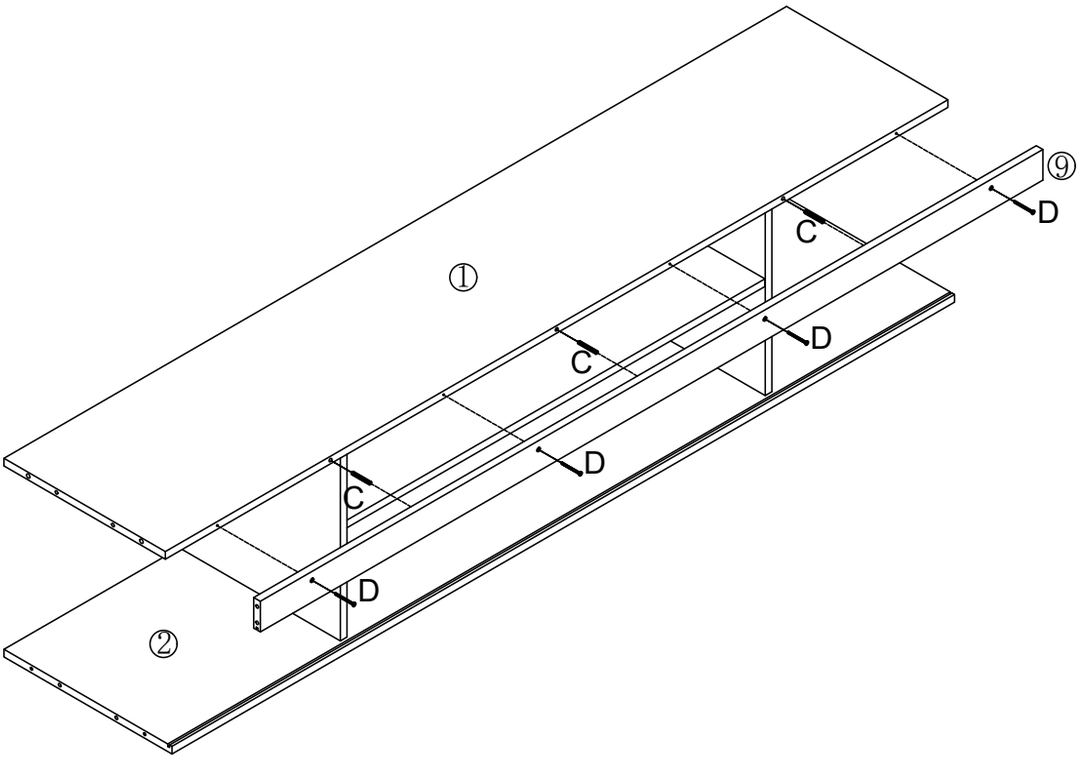

8

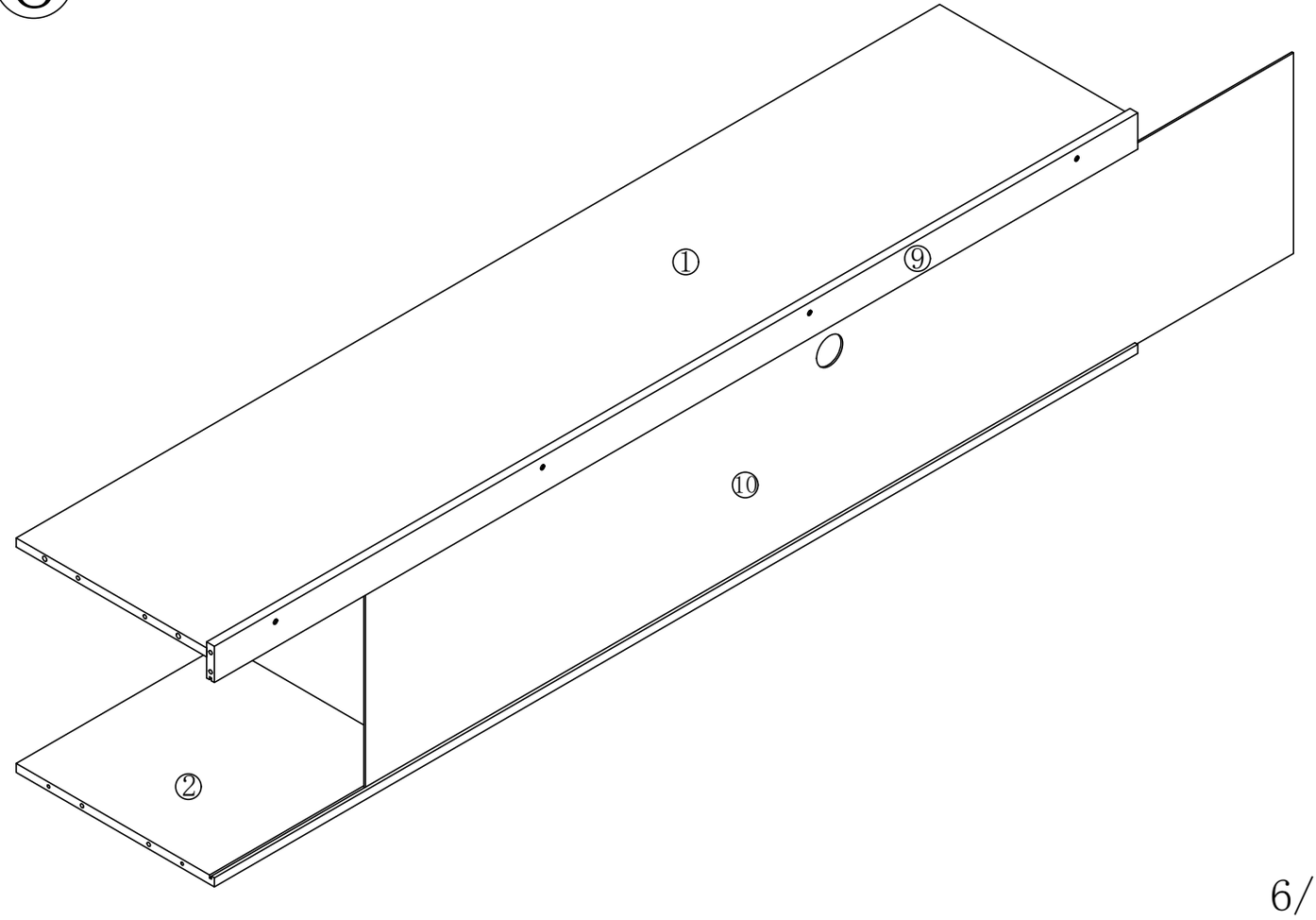

9

B	×4
φ15x10	

C	×12
φ6x30	

I	×8

M	×1

O	×4
M7x50MM	

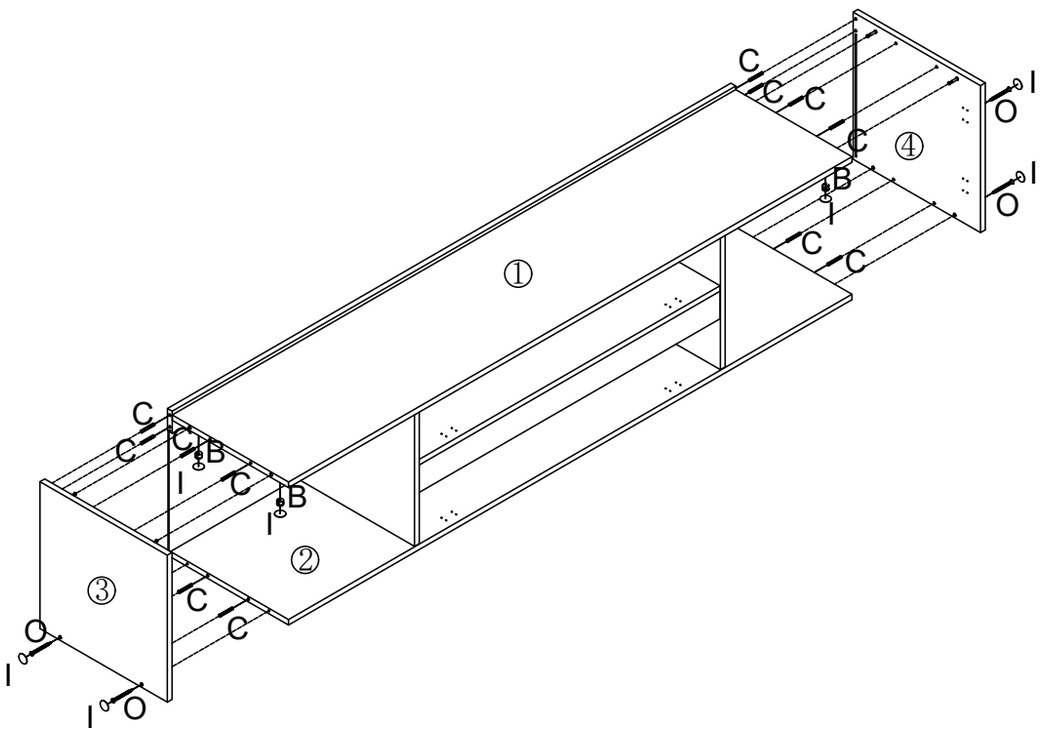

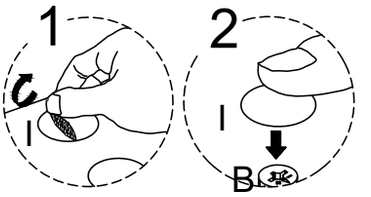

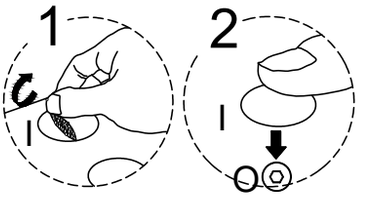

10

F	×12

L	×2

E	×14
M3.5x14MM	

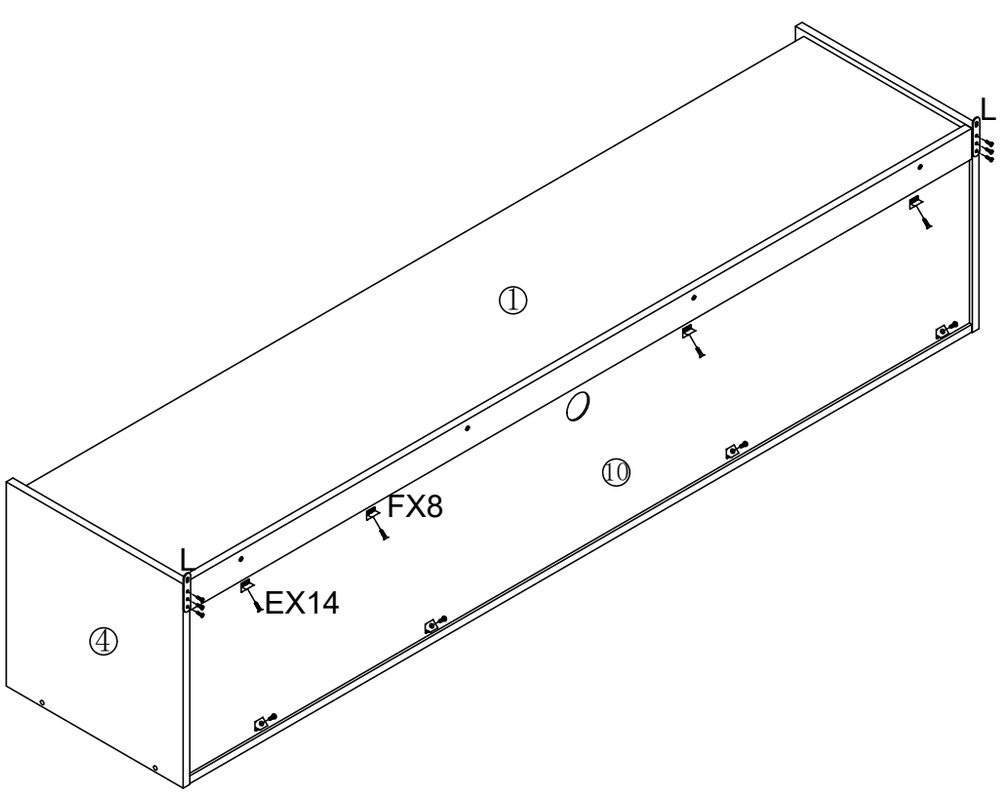

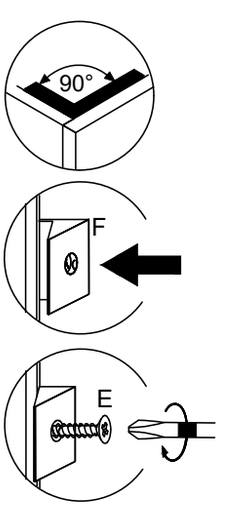

11

E	×16
M3.5x14MM	

G	×4

H	×4

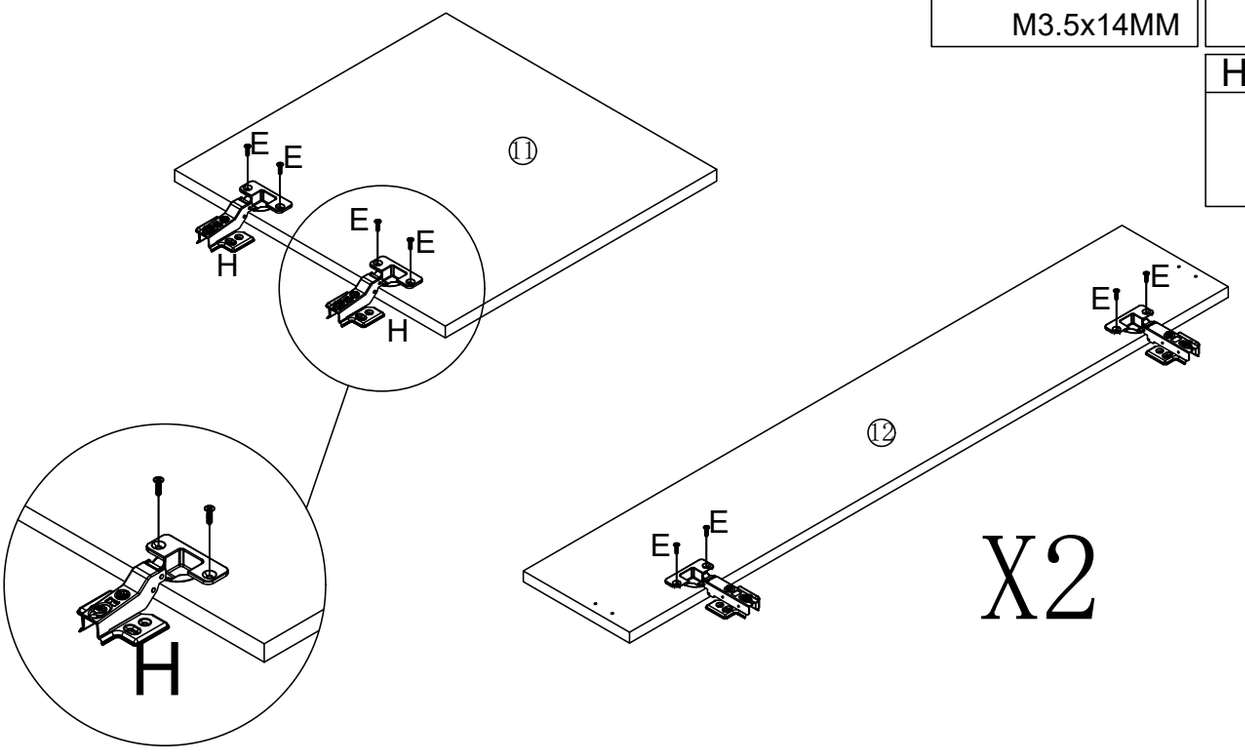

12

E	×16
M3.5x14MM	

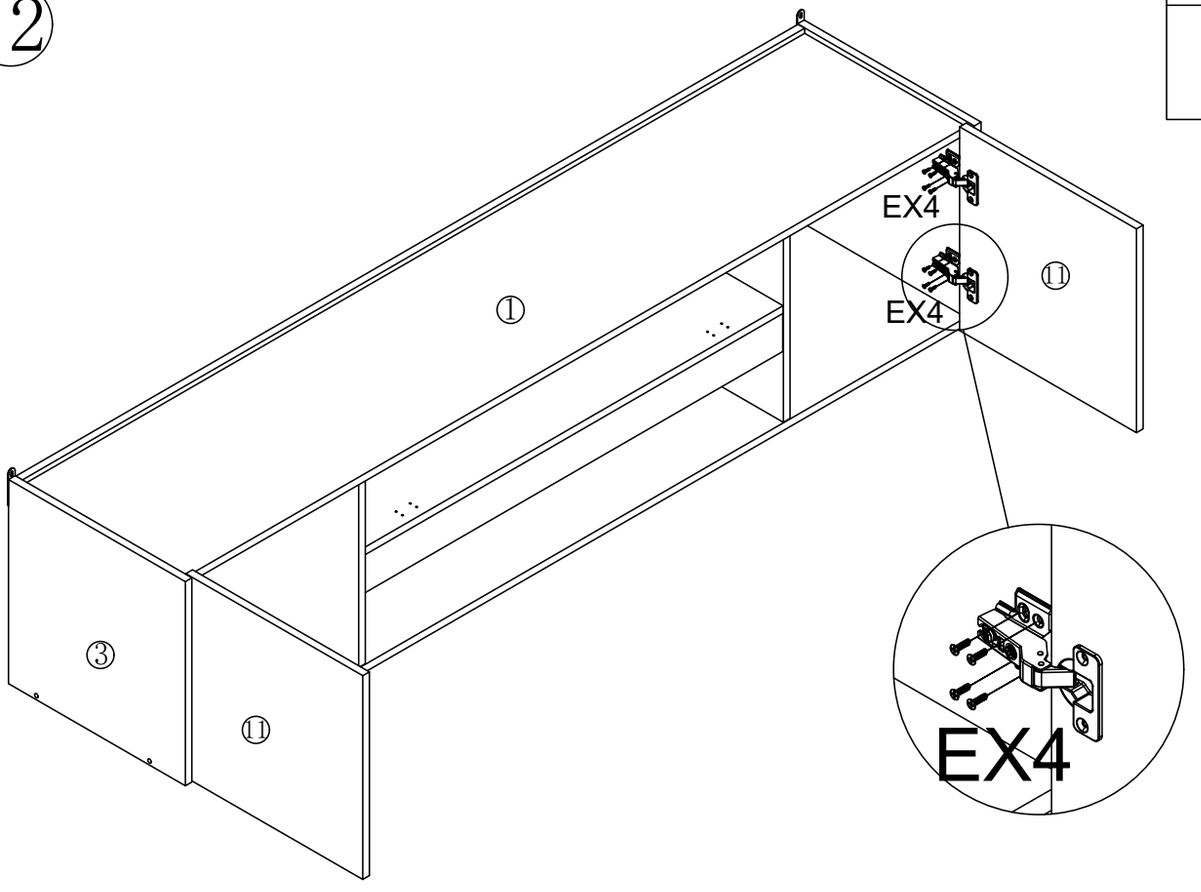

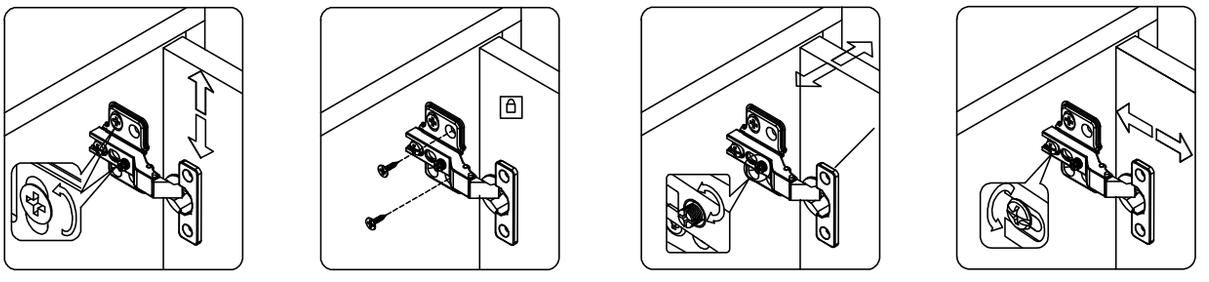

13

E	×36	K	×4
M3.5x14MM			

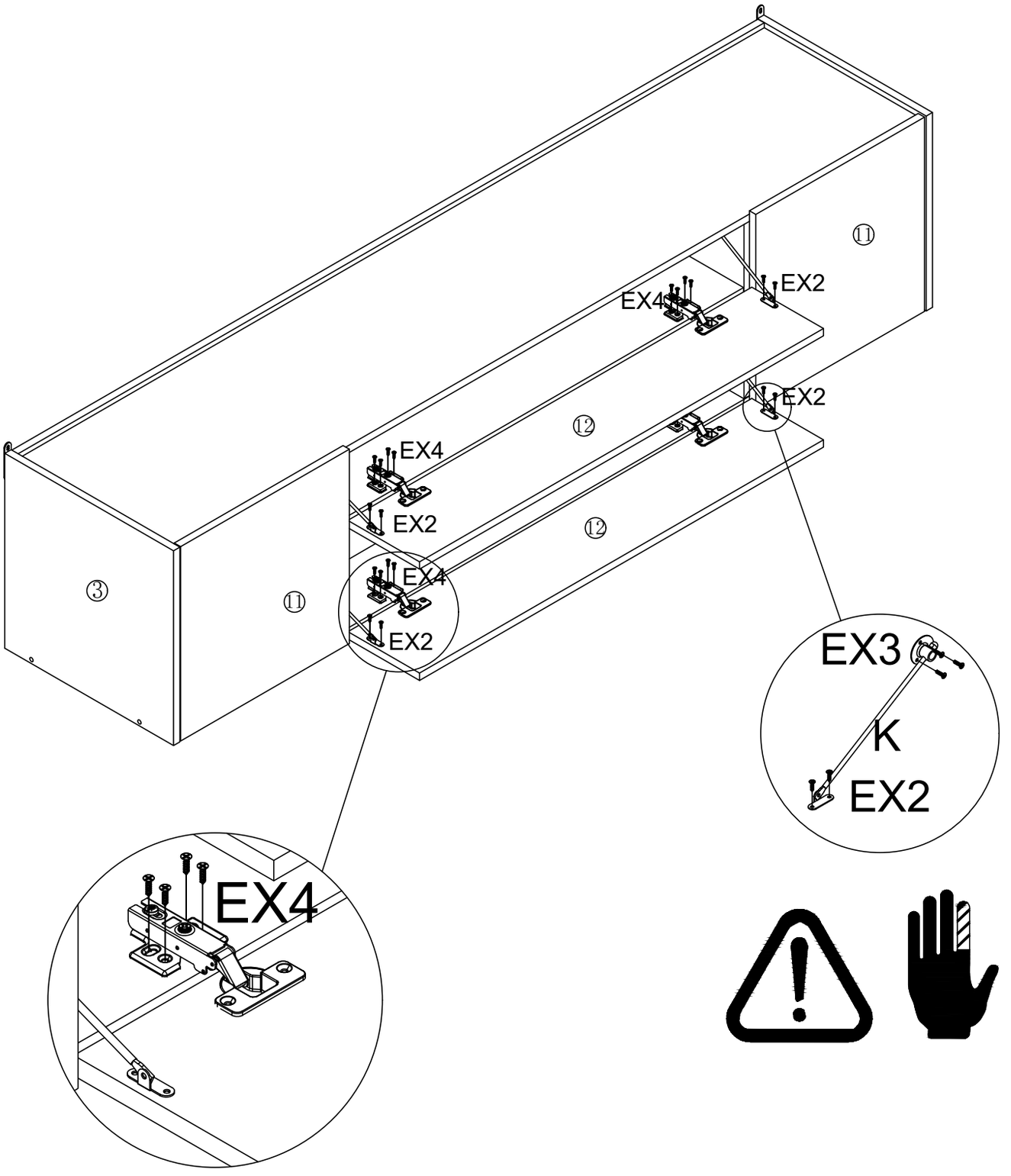

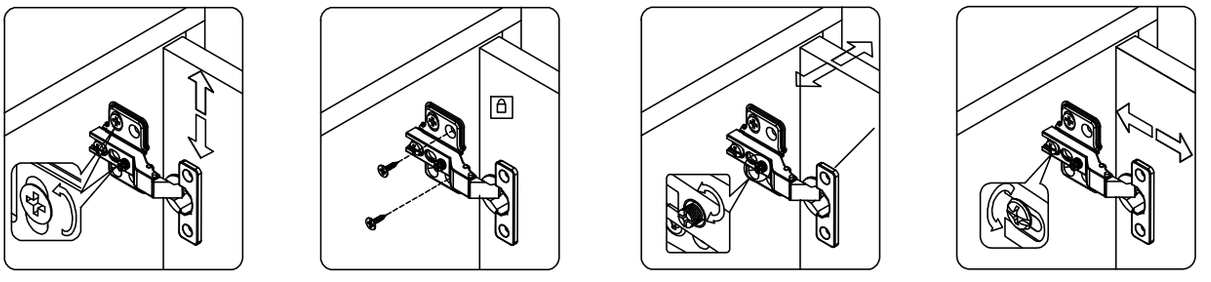

14

D	×2
M4x40MM	

J	×2

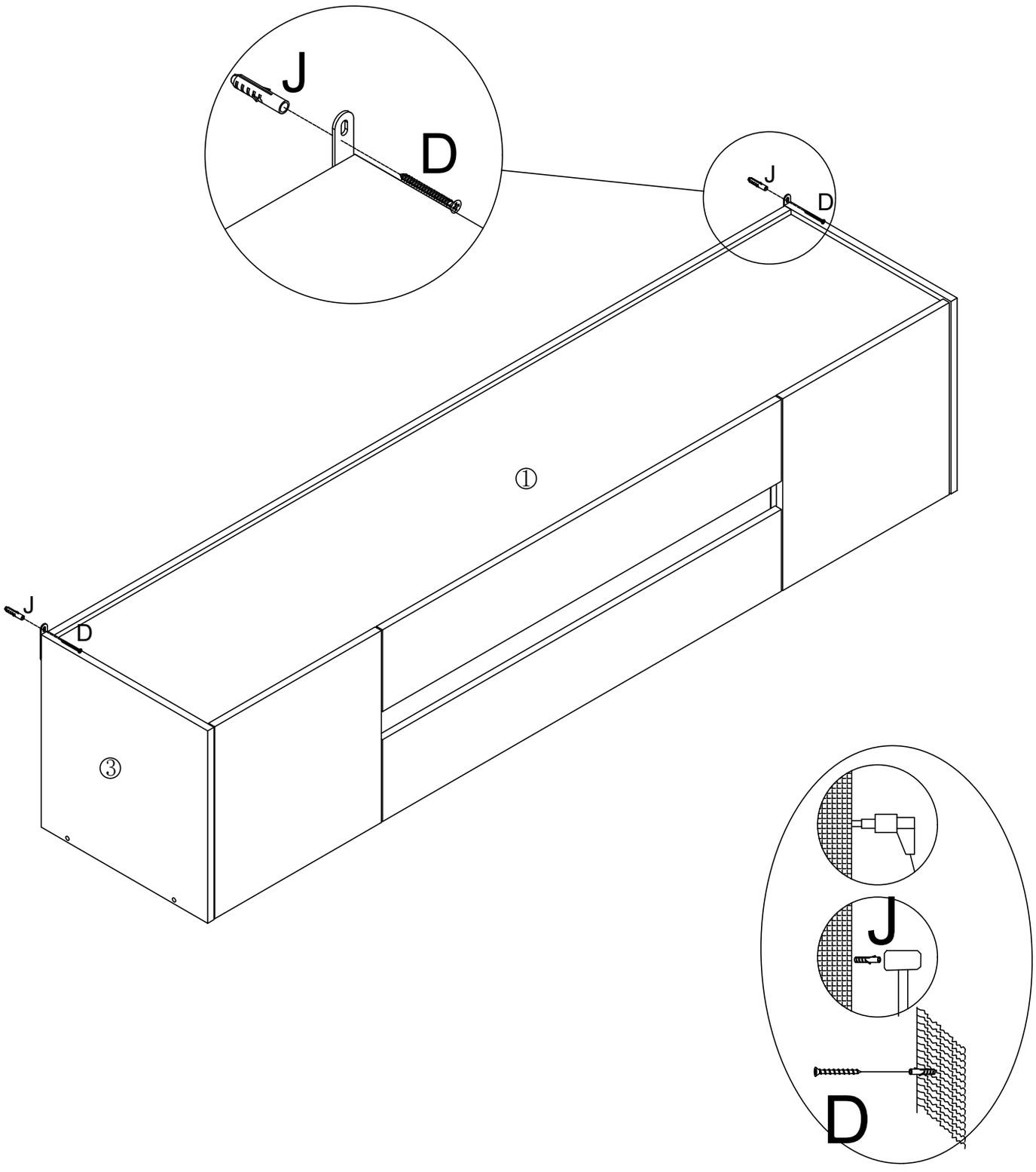

15

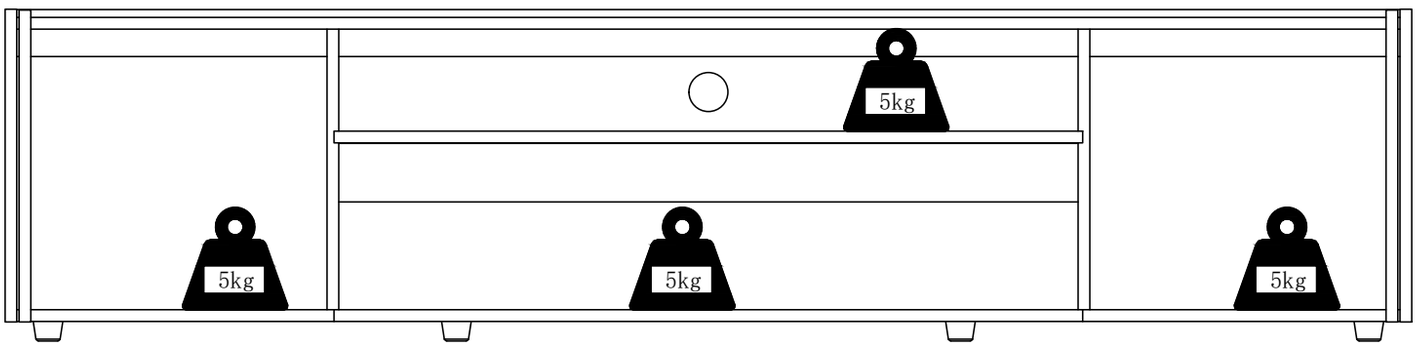

16

