A

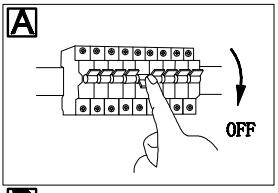


# 54030-1HLU

B

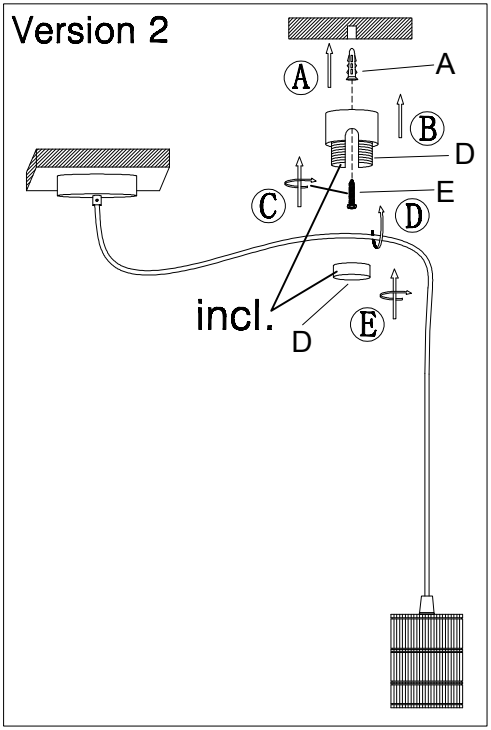


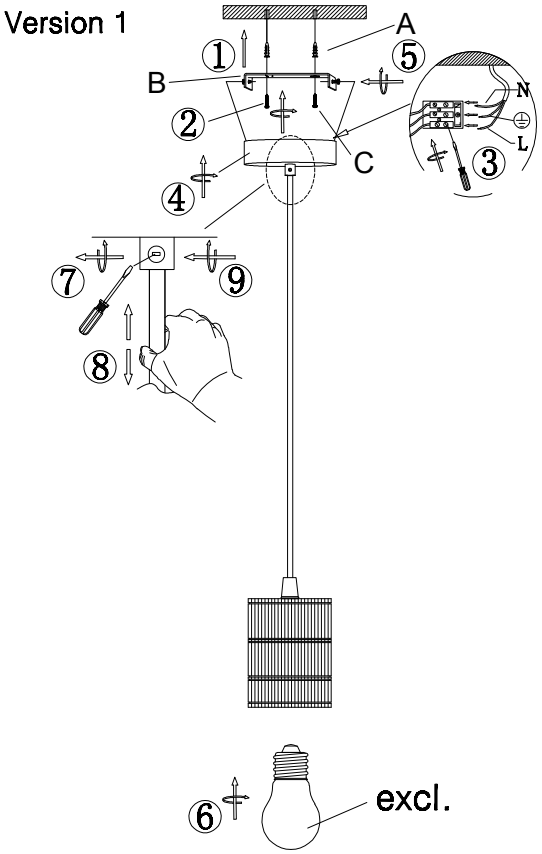


| | spare parts | |
|---|---|---|
| code | part | |
| A | | X 3PCS |
| B | | X 1PCS |
| C | | X 2PCS |
| D | | X 1PCS |
| E | | X 1PCS |
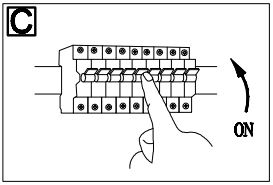
C