17130165-01
LOWBOARD

BDSK Handels GmbH & Co.KG
Mergentheimer Straße 59
DE-97084 Würzburg
E-Mail:Info@xxxlutz.at

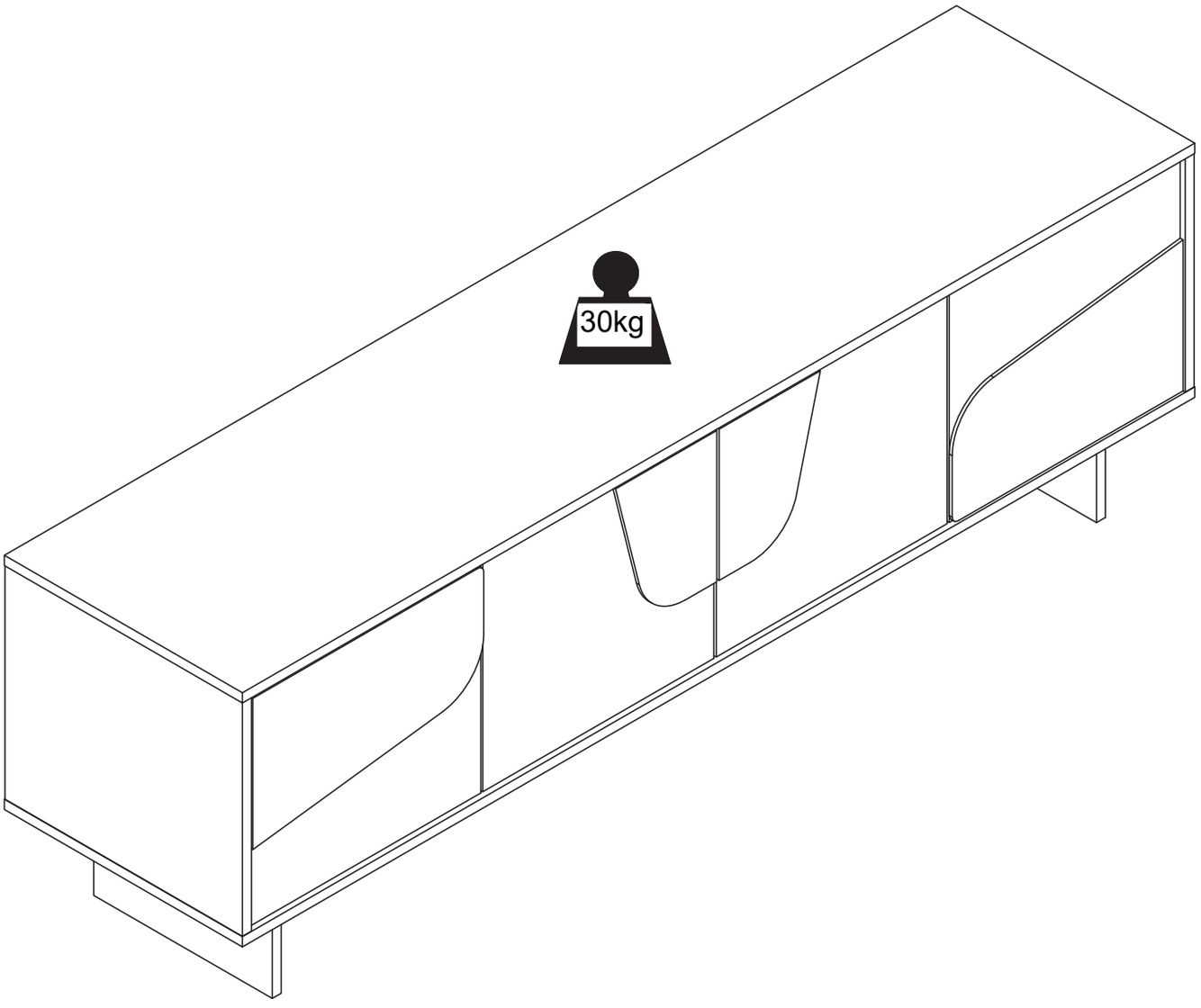



22
PAP

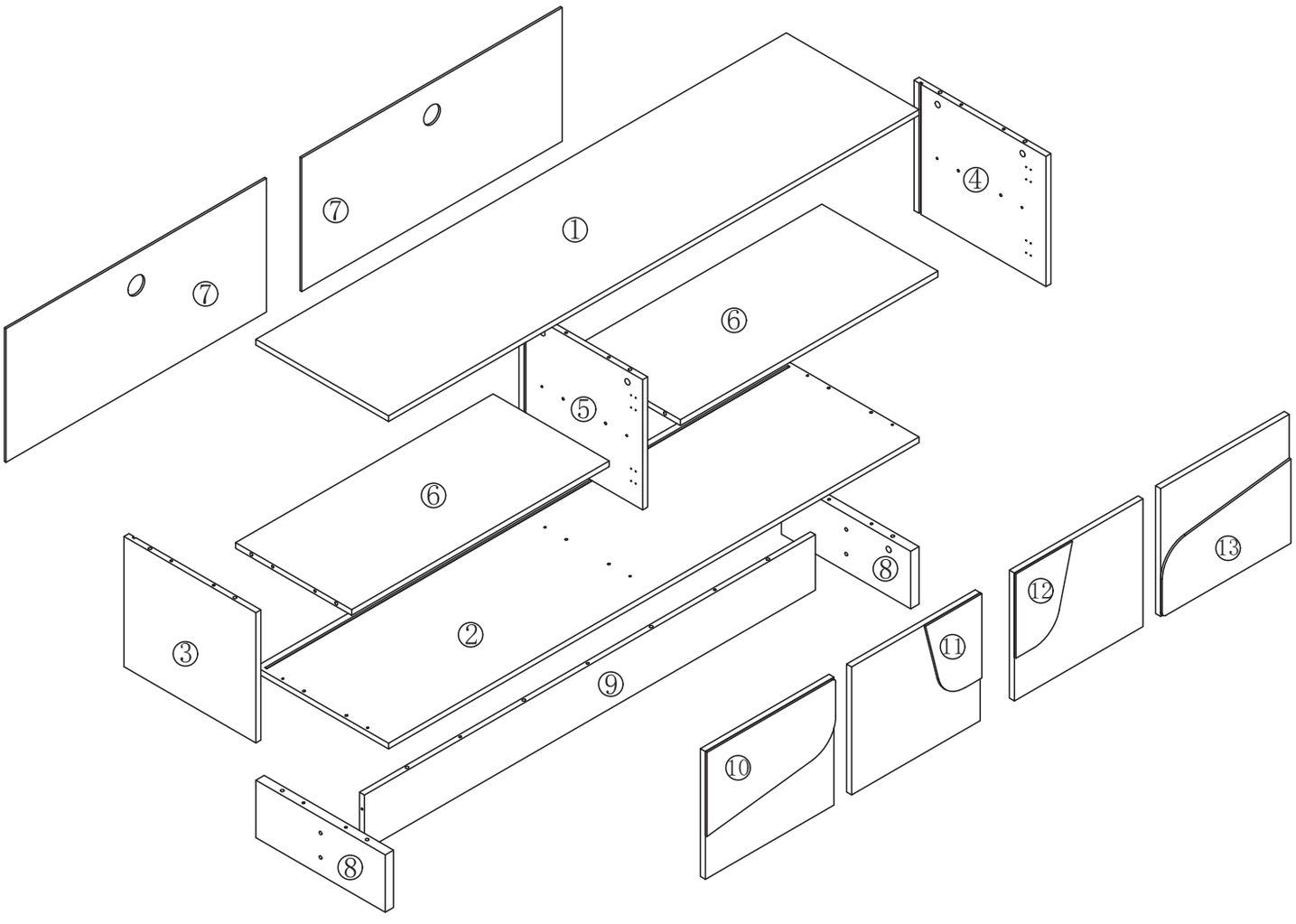

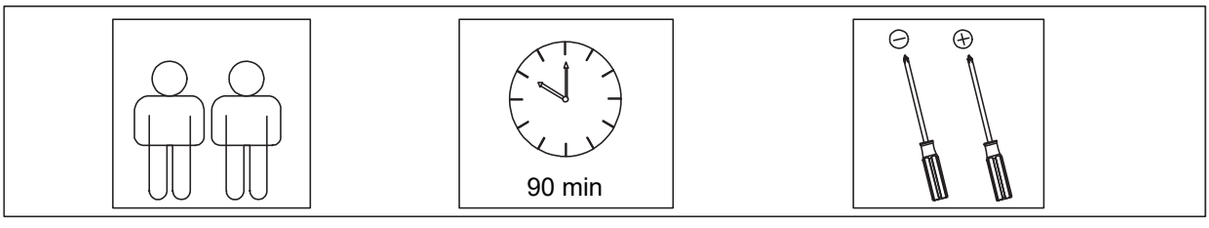

A ×22	B ×22	C ×23	D ×8	E ×66	F ×12	G ×2
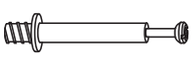		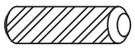			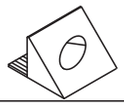	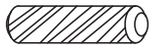
M6x35MM	φ15x10	Φ 6x30	M4x40MM	M3.5x14MM		Φ 6x50

H ×4	I ×6	J ×2	K ×4	L ×2	M ×4	N ×1
			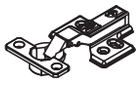	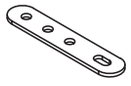	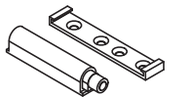	

O ×4	P ×1	R ×12	S ×4
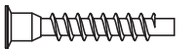			
M7x50MM		M3x14MM	

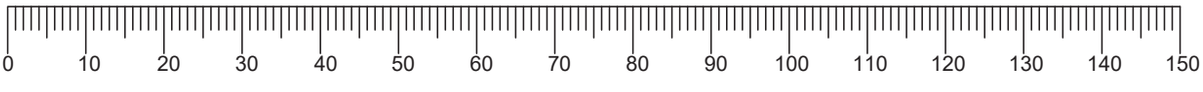

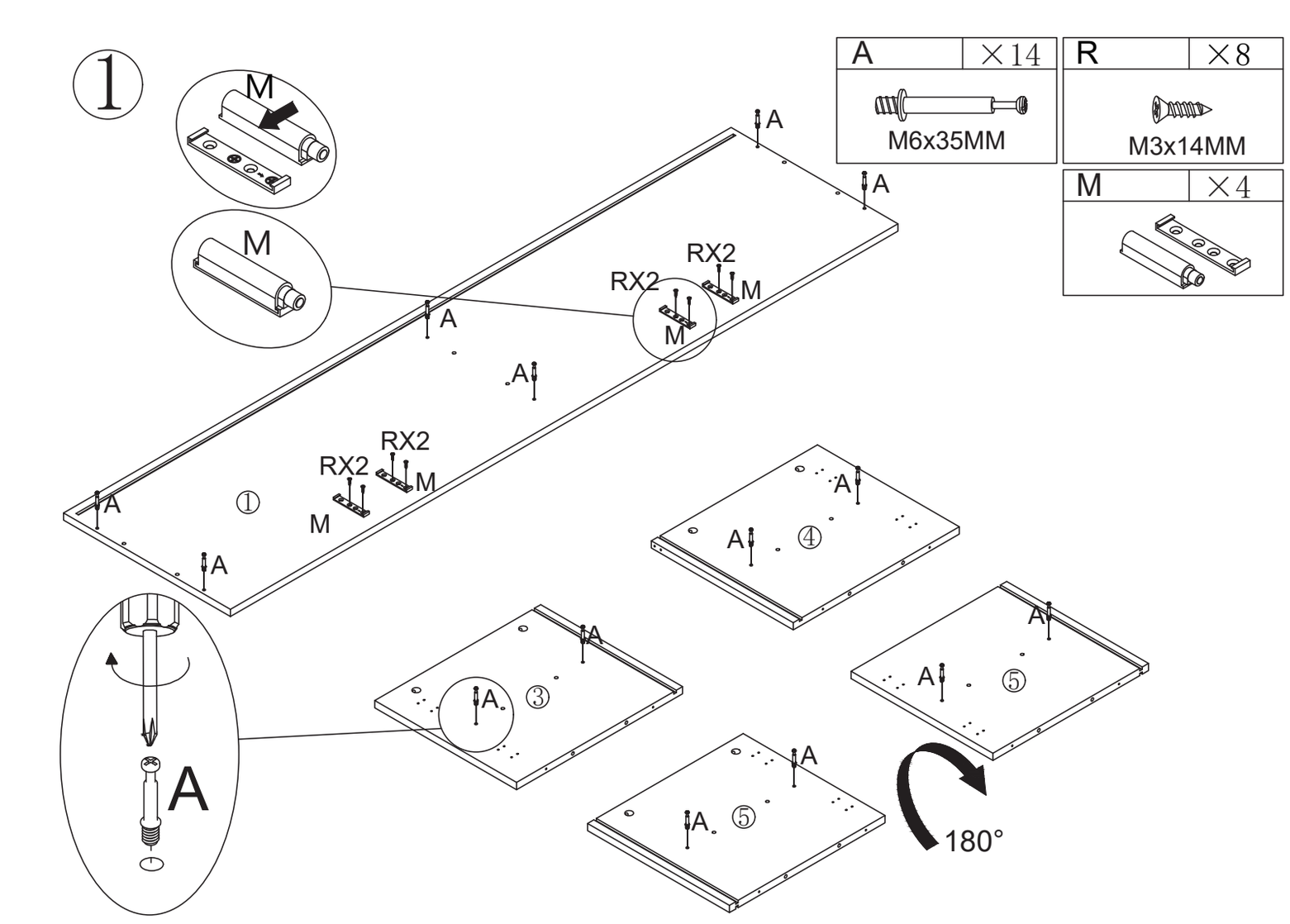
①
A ×14
M6x35MM
R ×8
M3x14MM
M ×4
M
M
A
RX2
RX2
M
M
A
A
RX2
RX2
M
M
A
①
A
A
④
A
A
③
A
A
⑤
A
A
⑤
A
180°

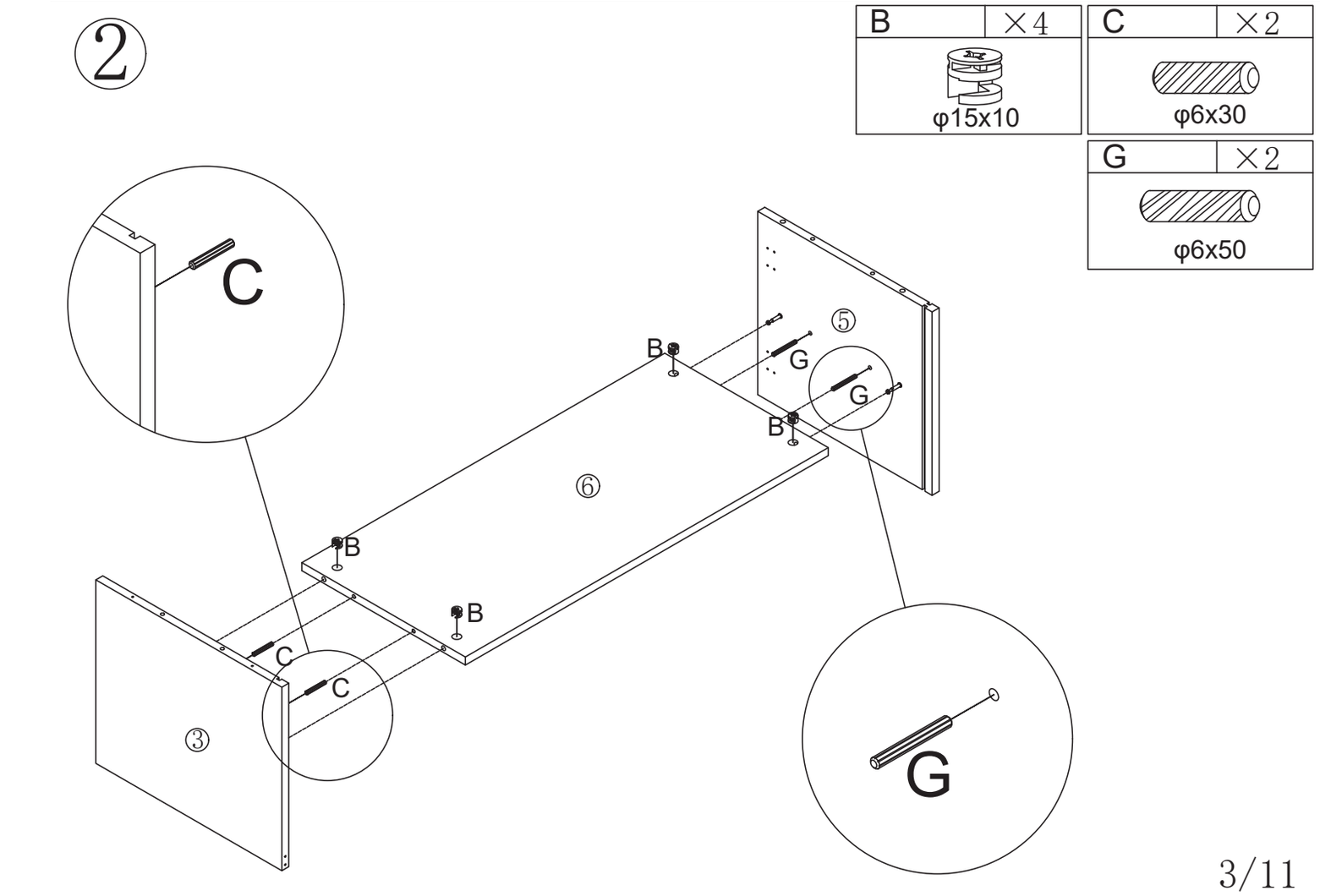
②
B ×4
φ15x10
C ×2
φ6x30
G ×2
φ6x50
C
⑤
B
G
G
B
⑥
B
B
C
C
③
G

③

B	×4
φ15x10	

C	×2
φ6x30	

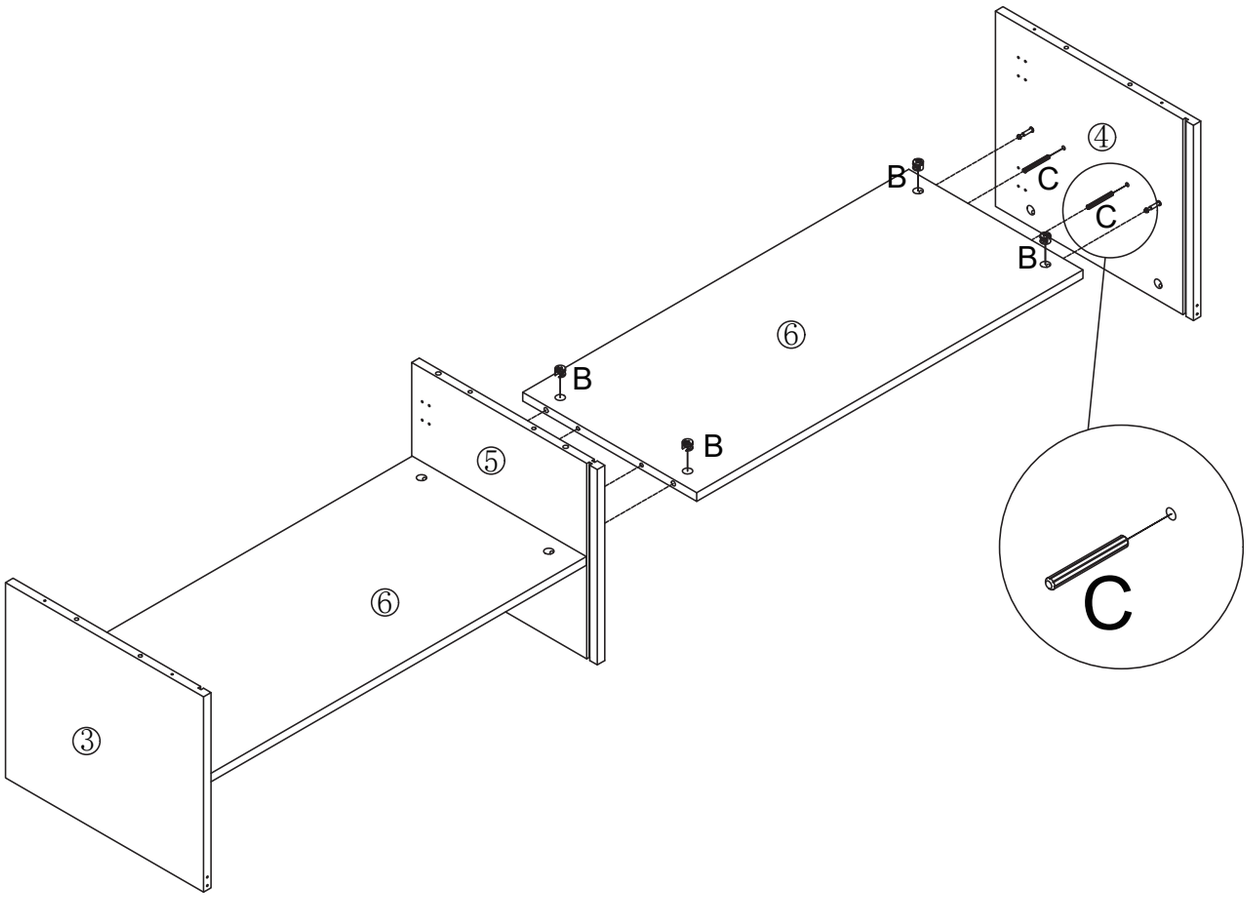

④

B	×6
φ15x10	

C	×6
φ6x30	

I	×6

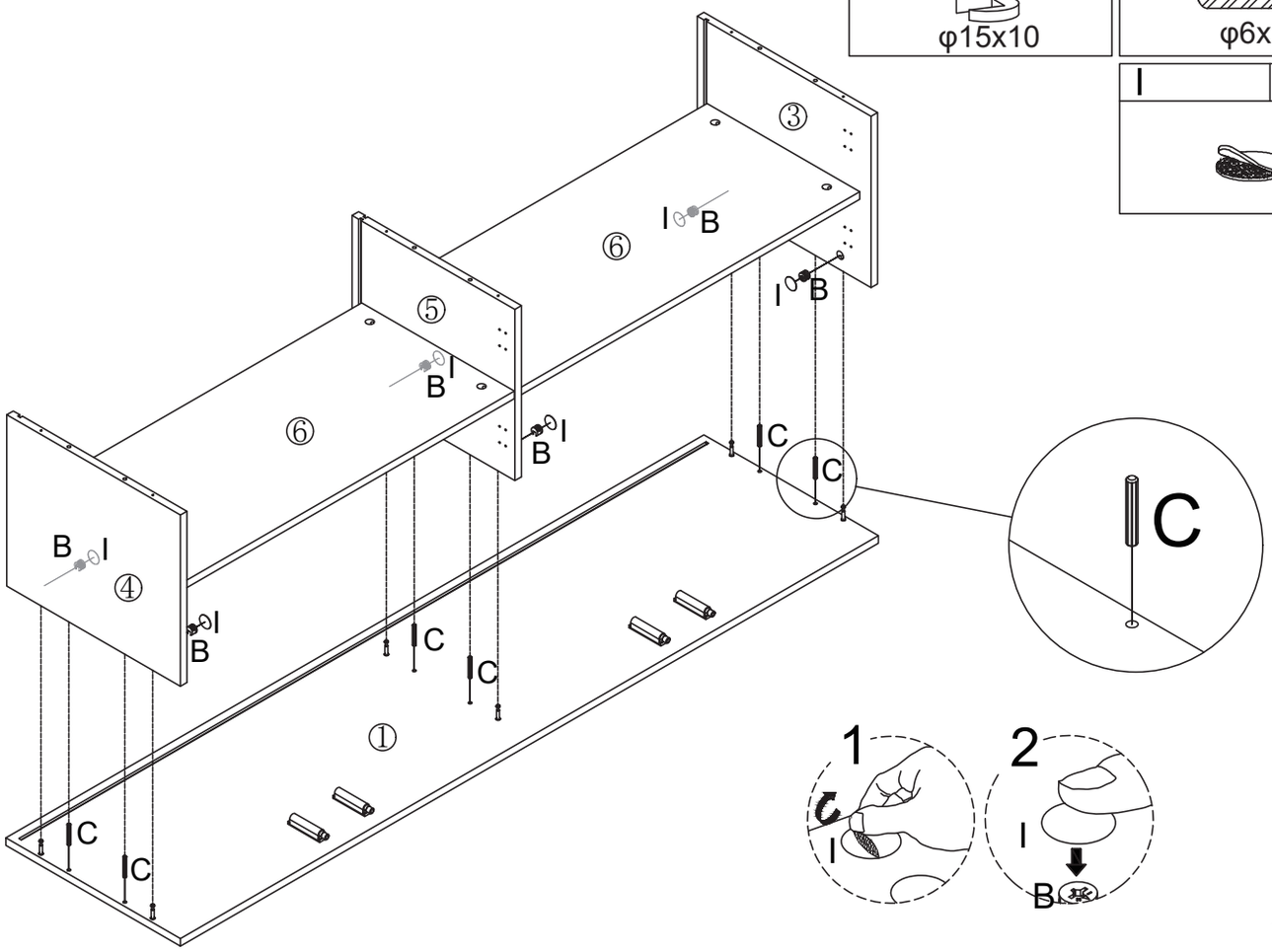

5

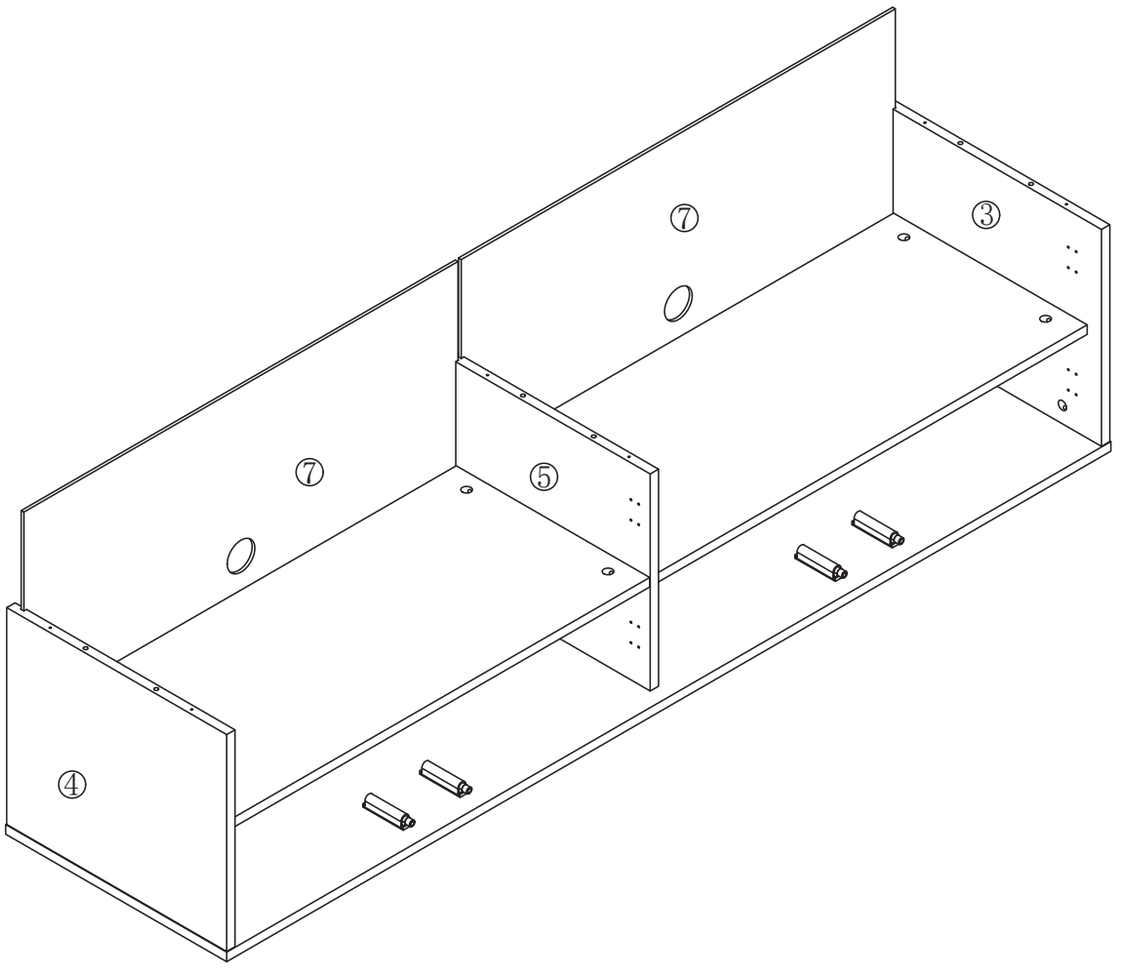

6

C	×6
φ6x30	

D	×6
M4x40MM	

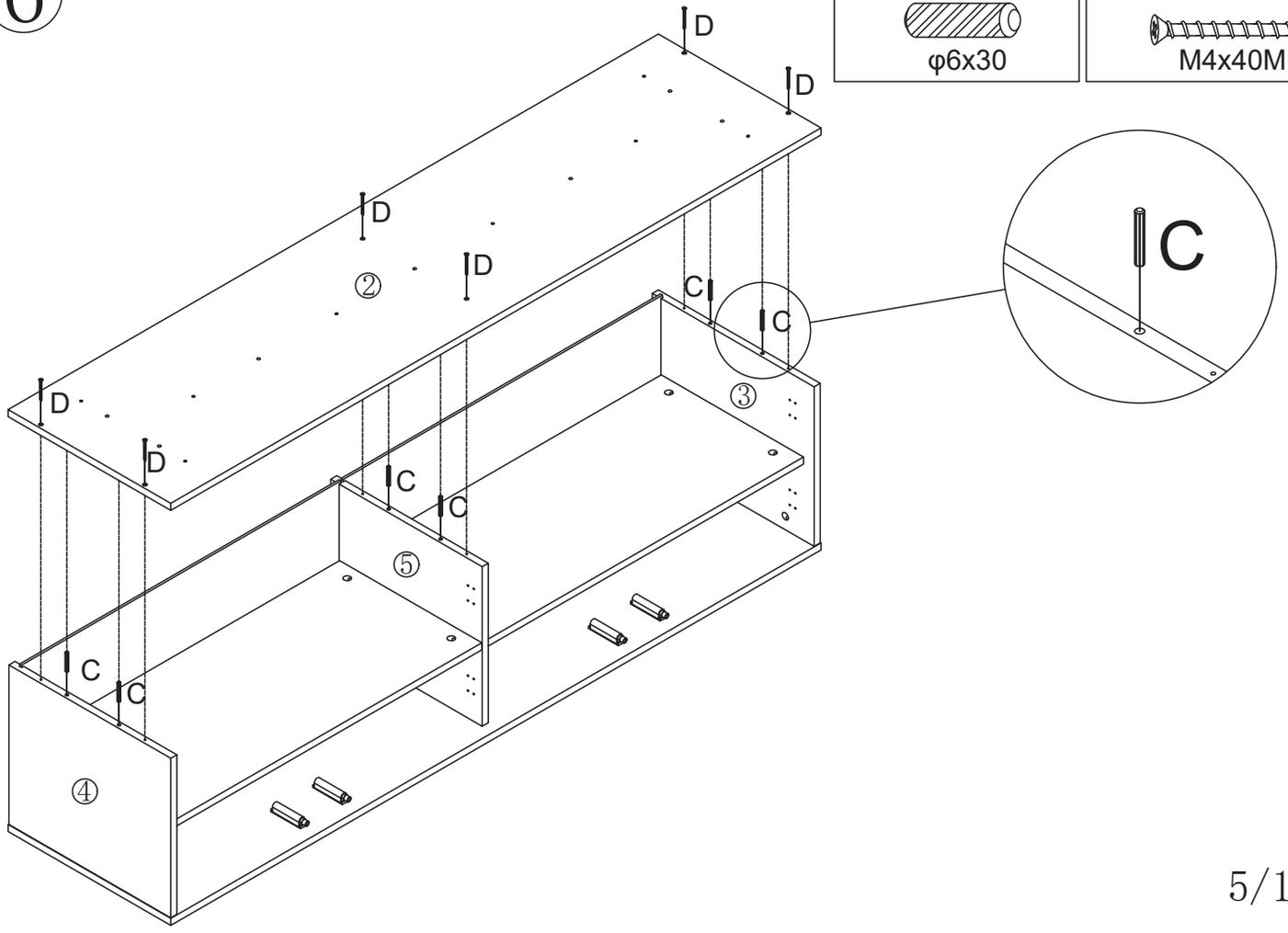

7

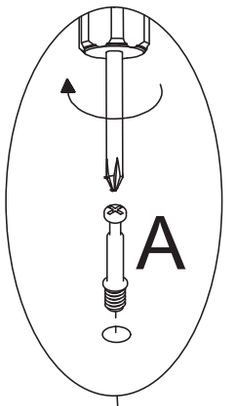

A	×8
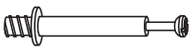 M6x35MM	

8

N	×1
	

O	×4
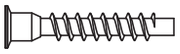 M7x50MM	

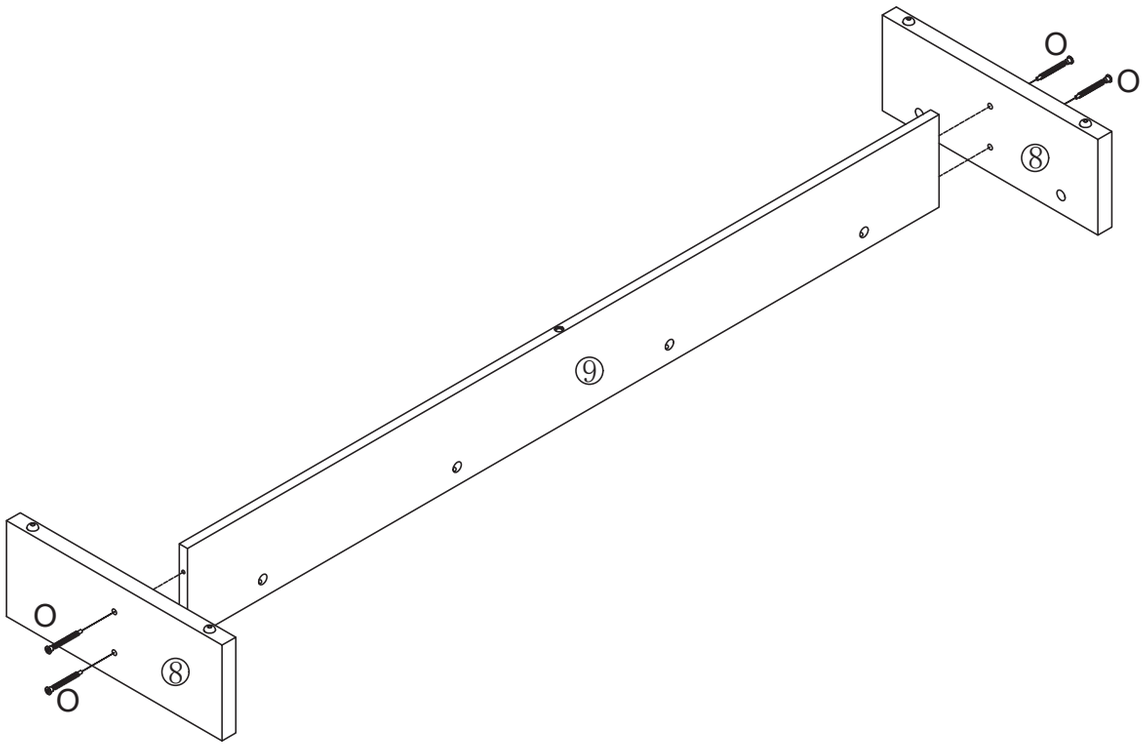

9

B	×8
φ15x10	

C	×7
φ6x30	

P	×1

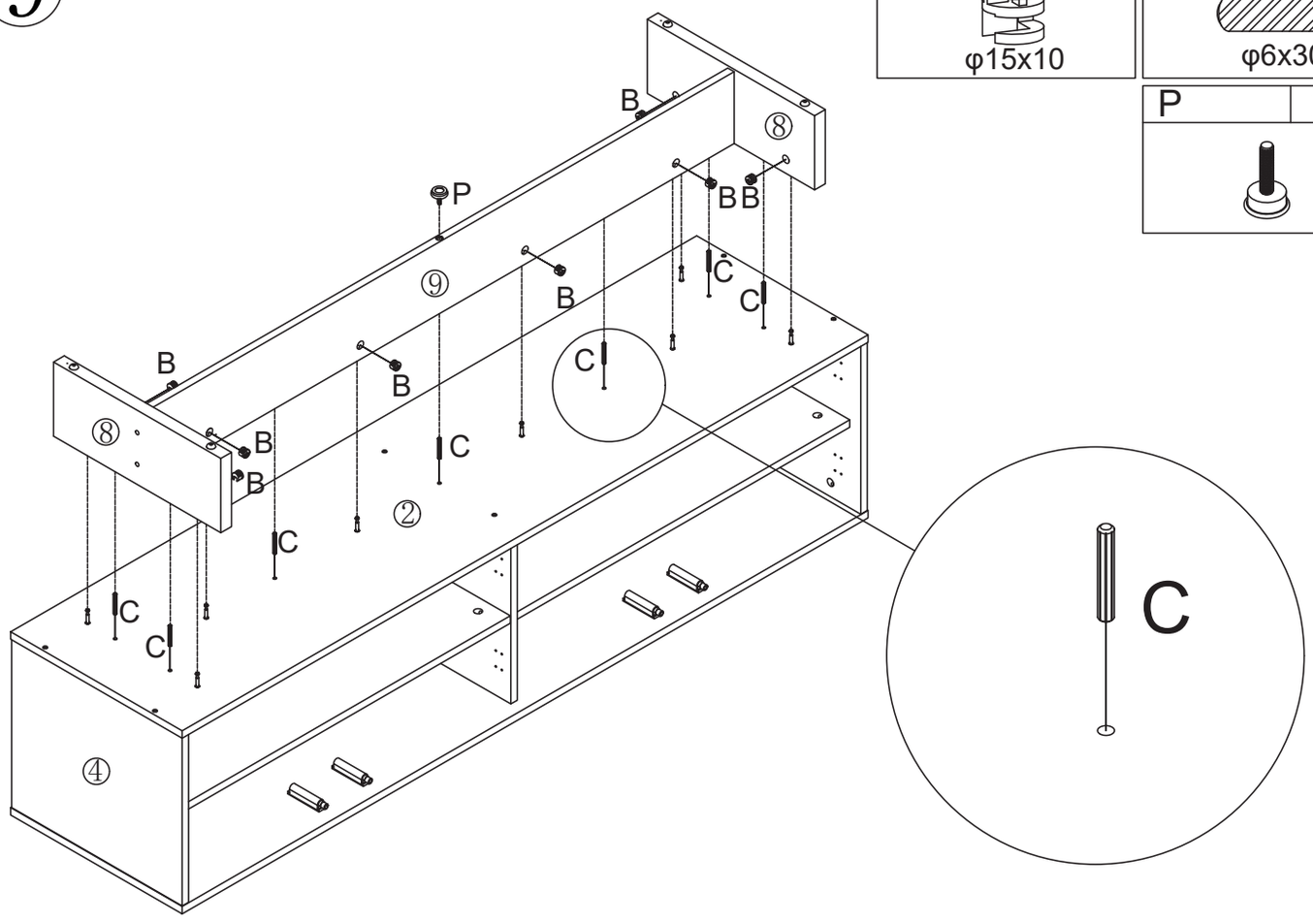

10

F	×12

L	×2

E	×18
M3.5x14MM	

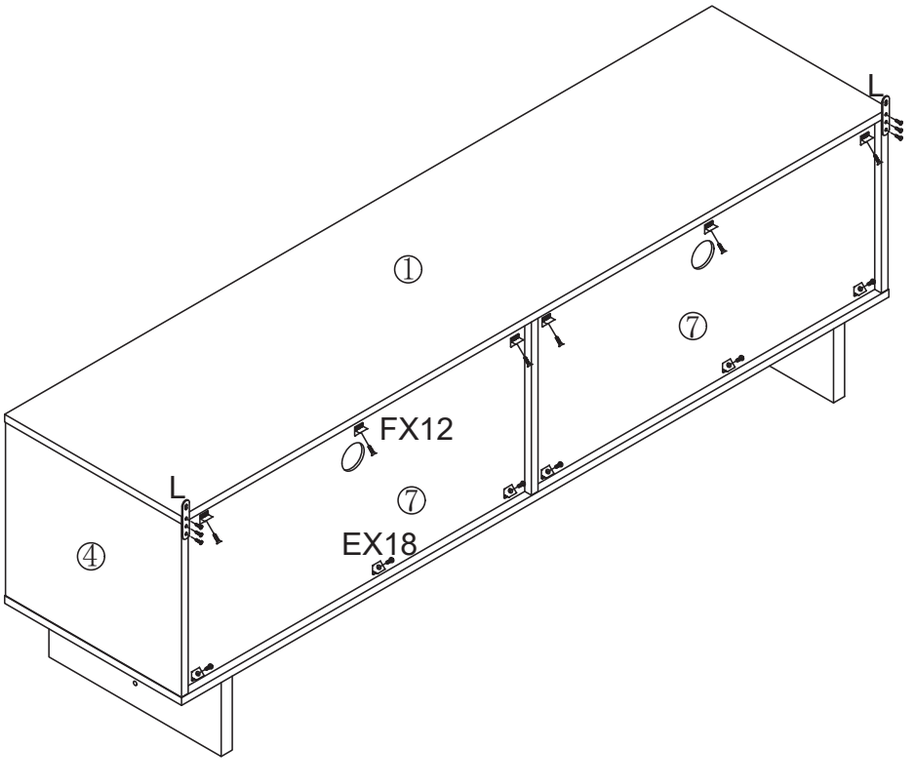

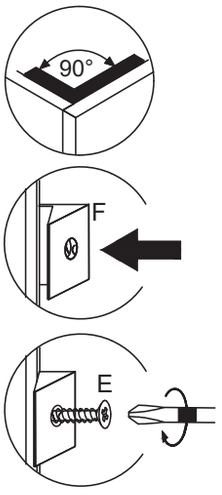

11

E	×16
M3.5x14MM	

H	×4

R	×4
M3x14MM	

K	×4

S	×4

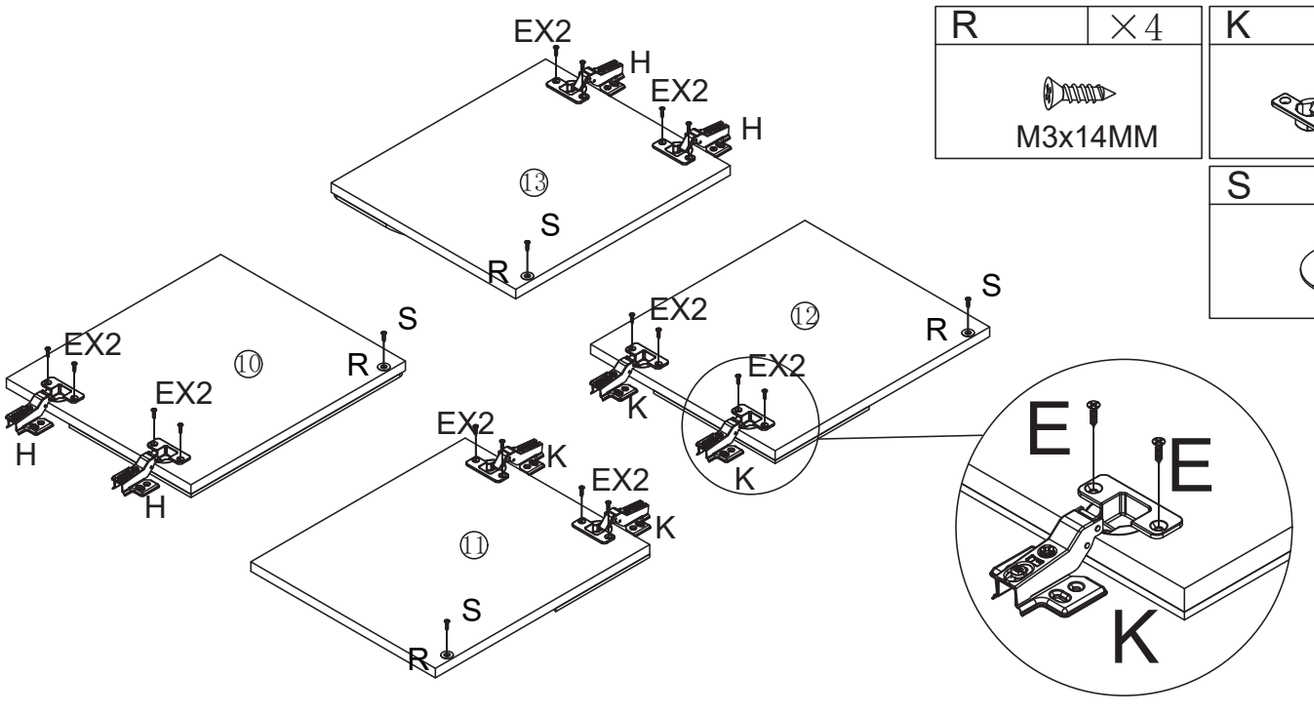

12

E	×16
M3.5x14MM	

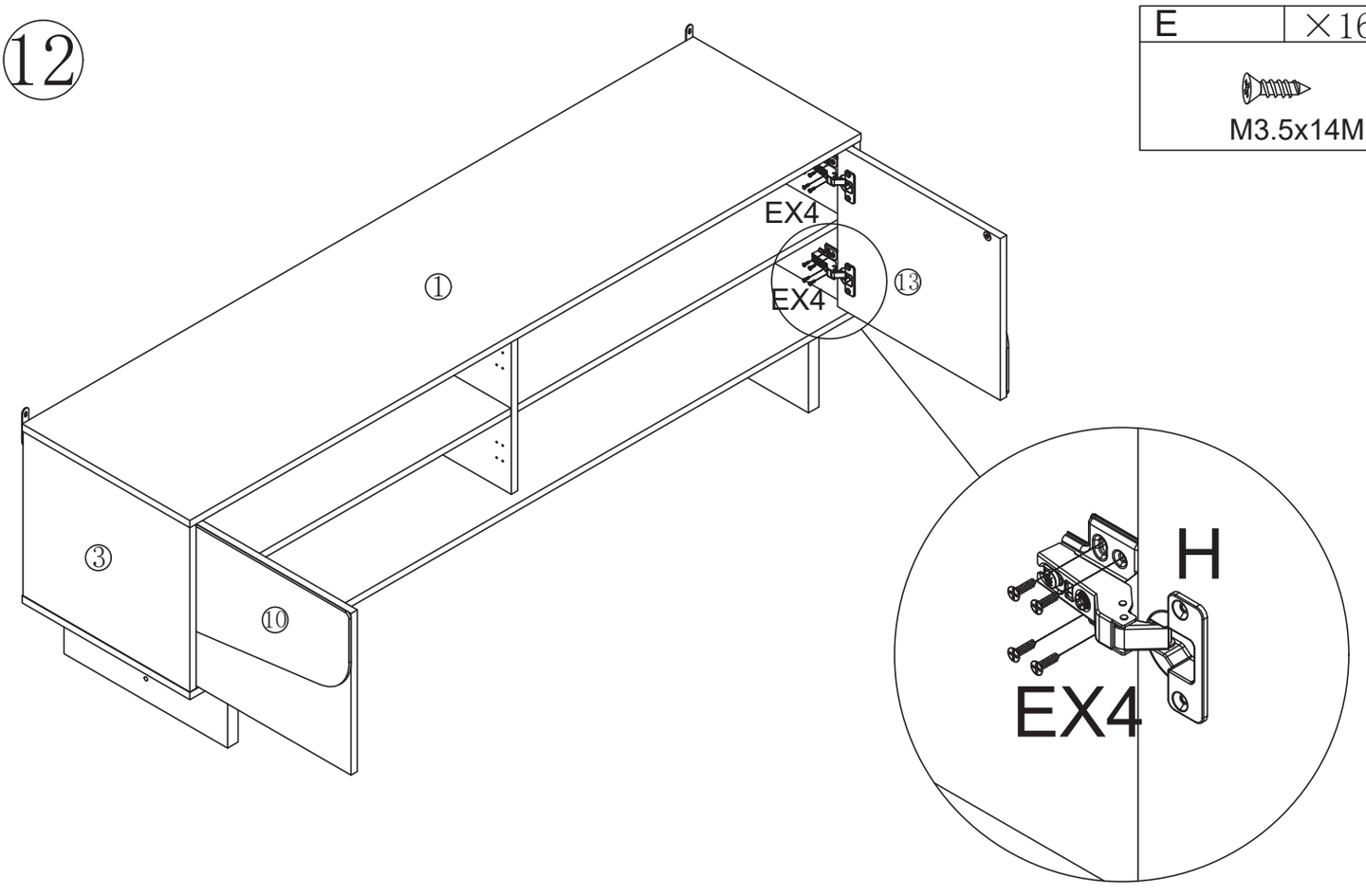

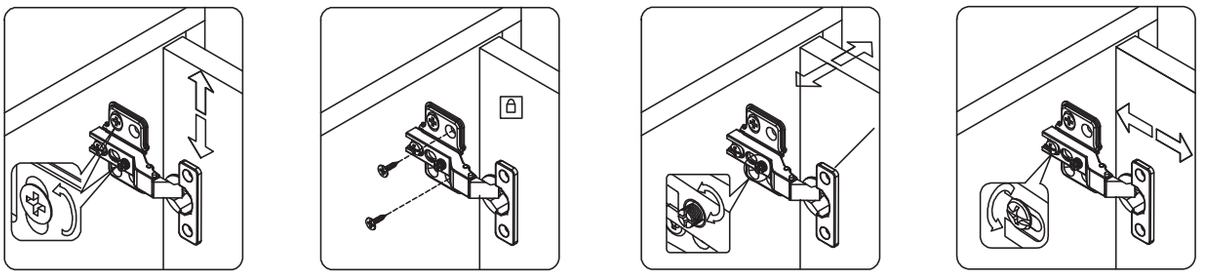

13

E	×16
M3.5x14MM	

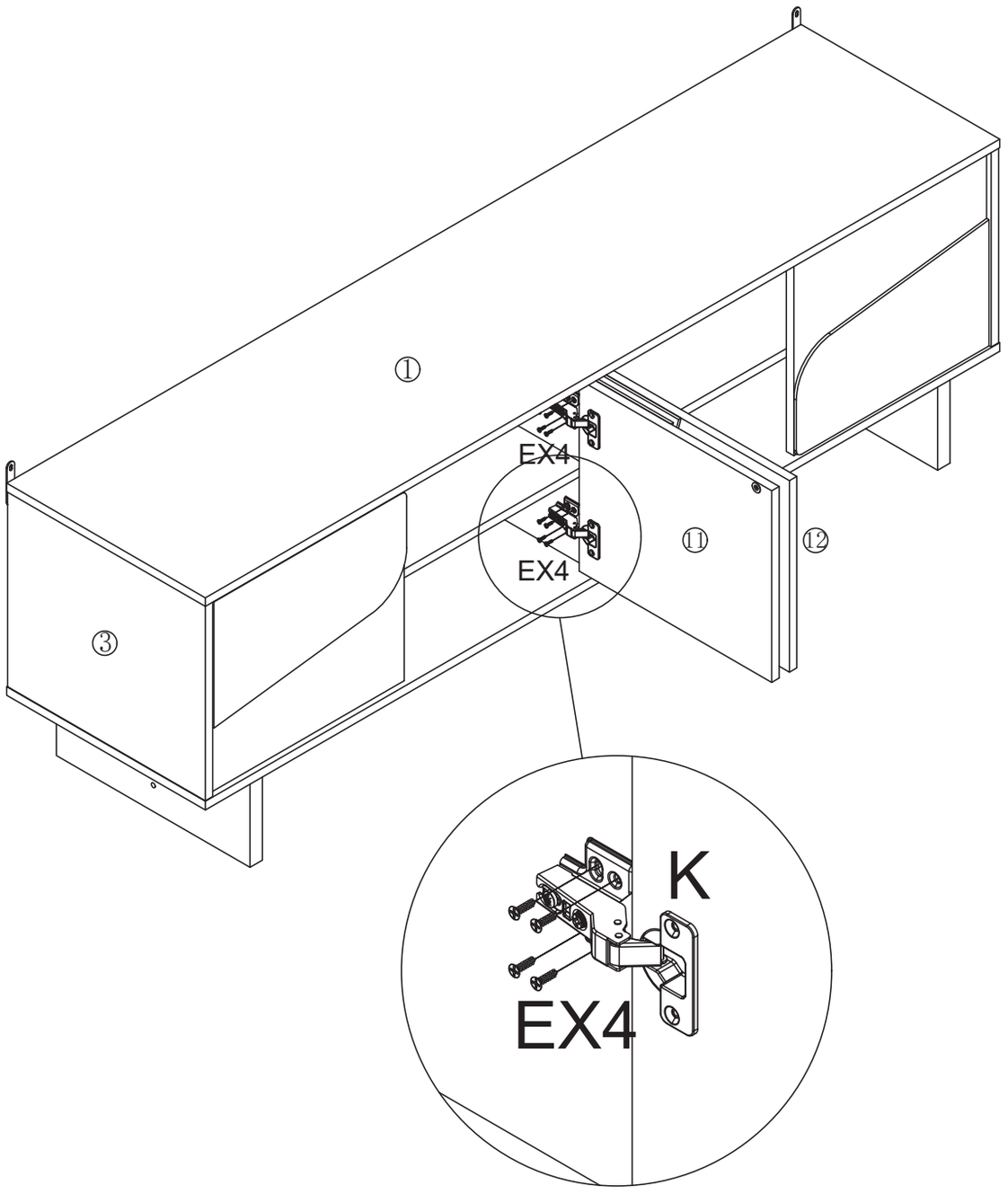

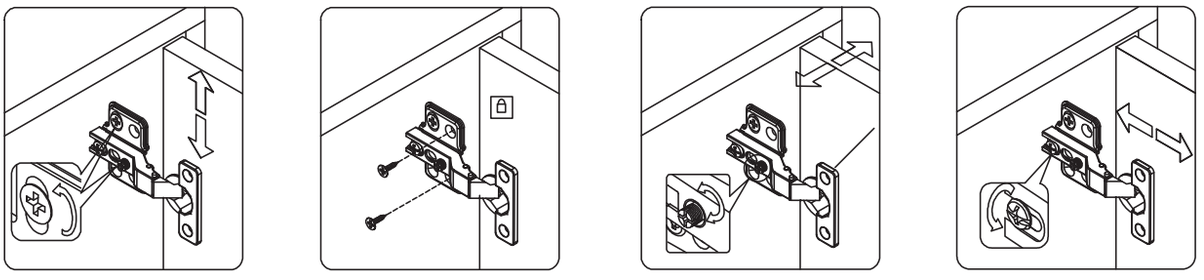

14

D	×2
M4x40MM	

J	×2

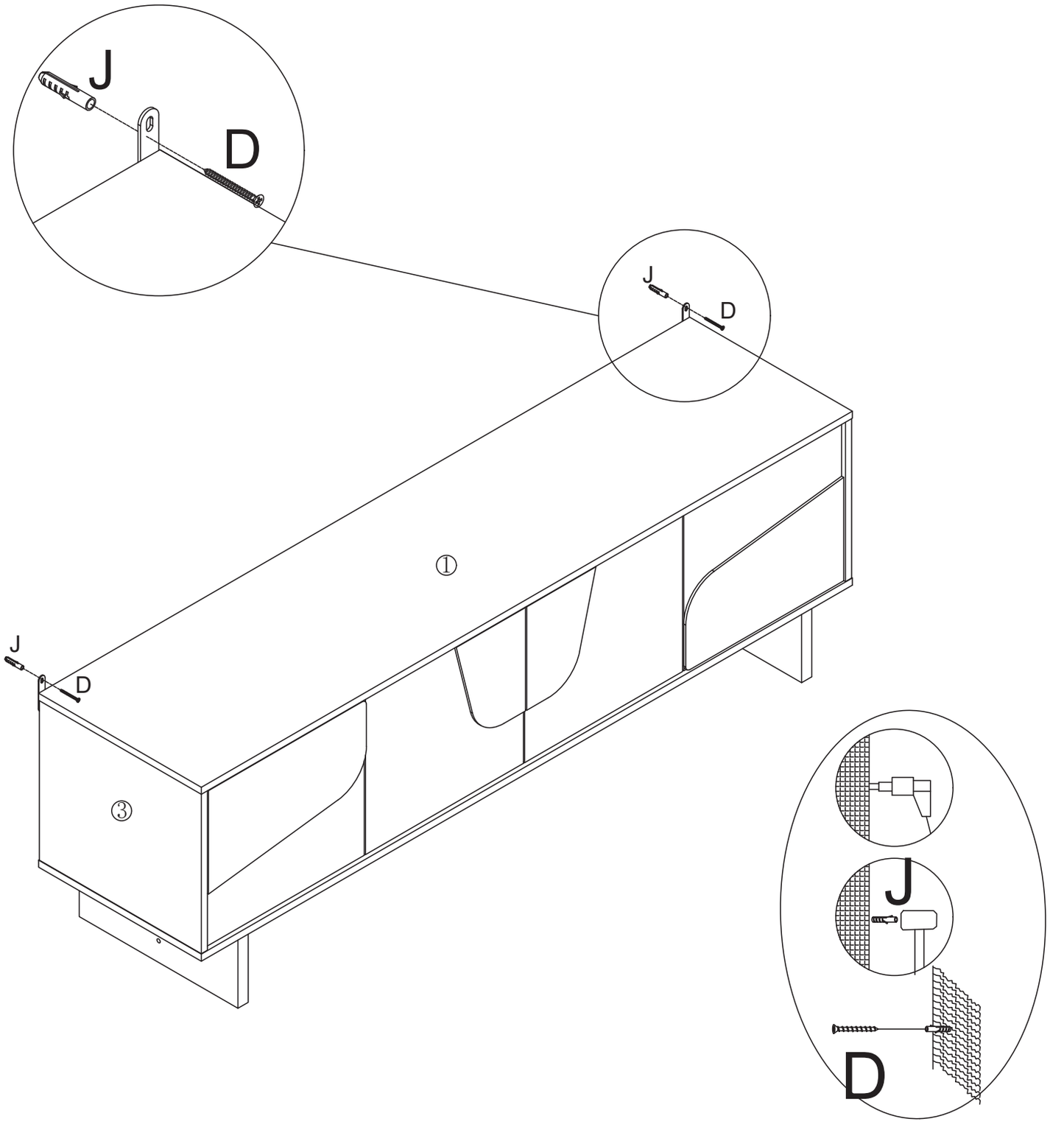

15

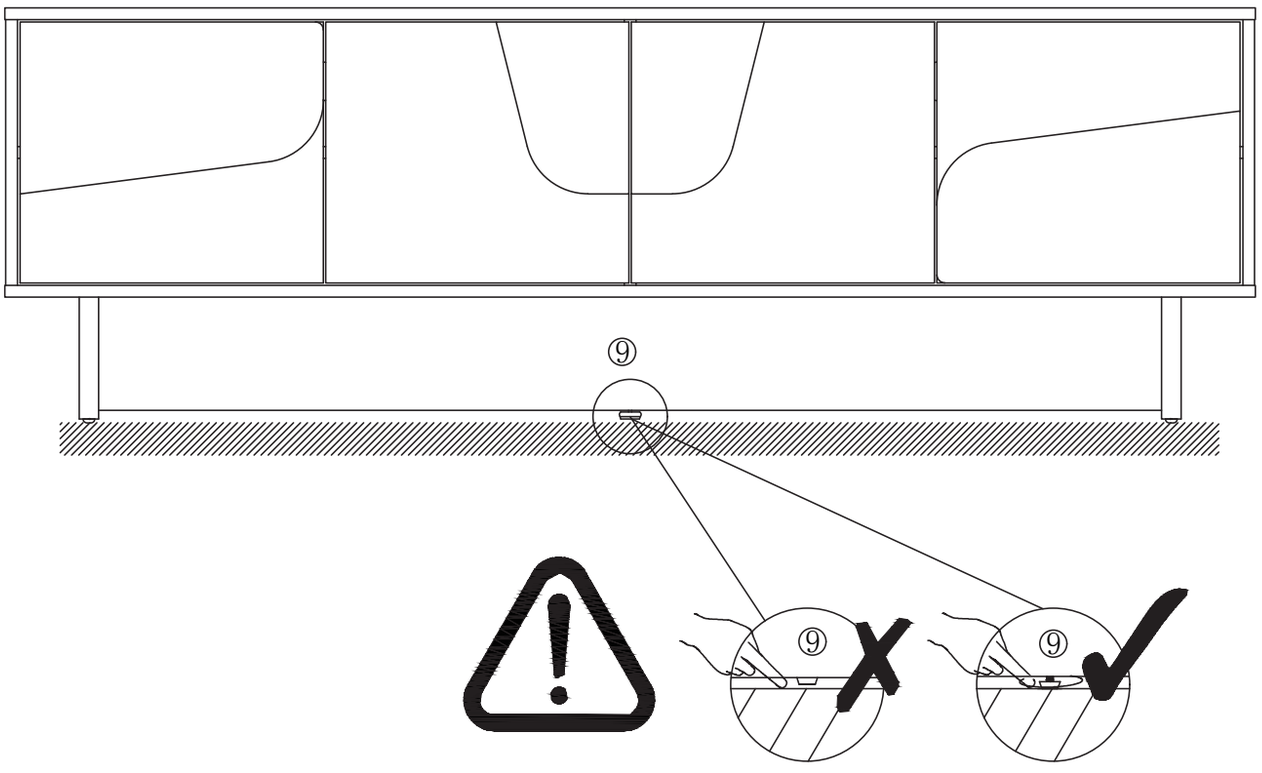

16

