17390055/01

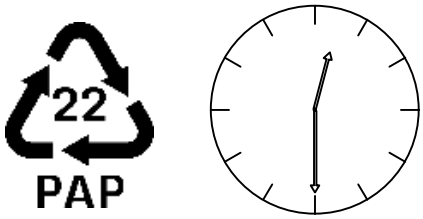

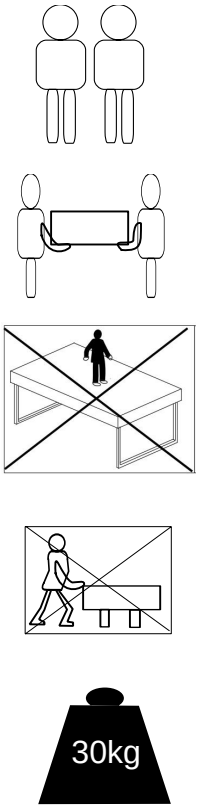

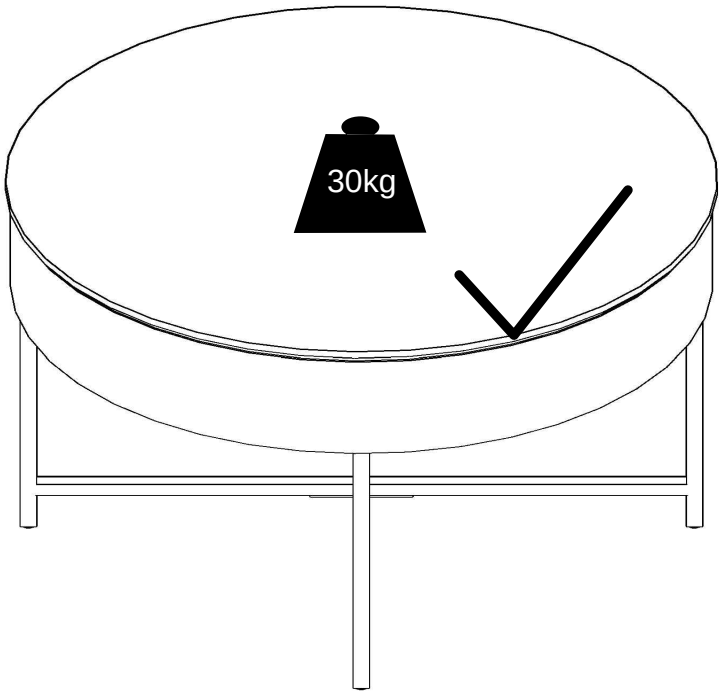

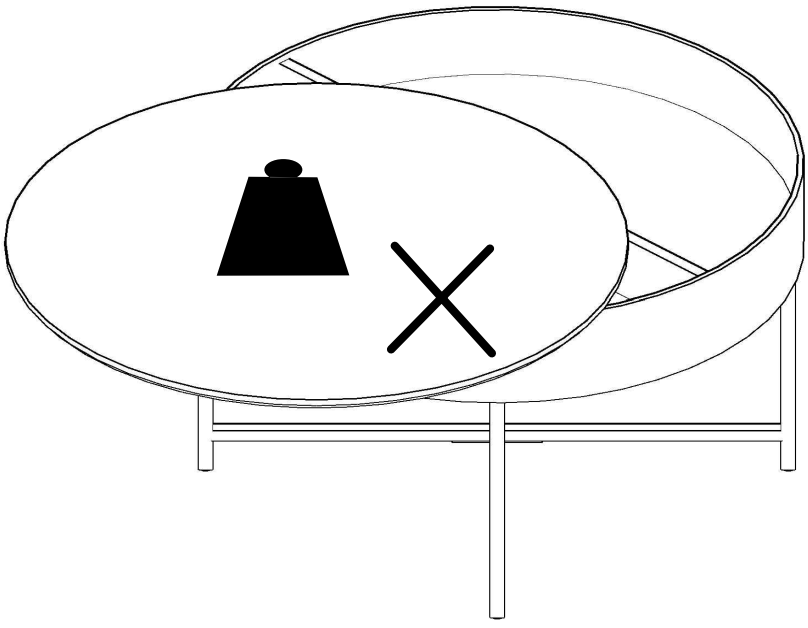

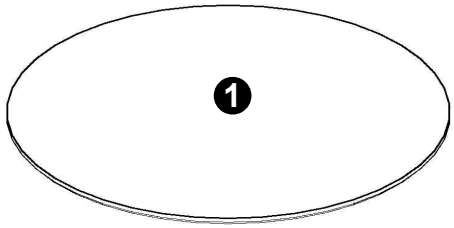

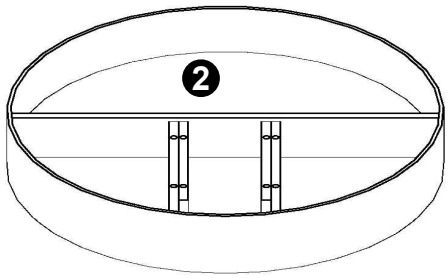

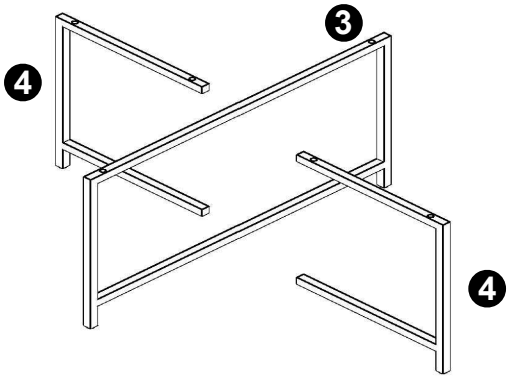

1× 1

1× 2

1× 3

2× 4

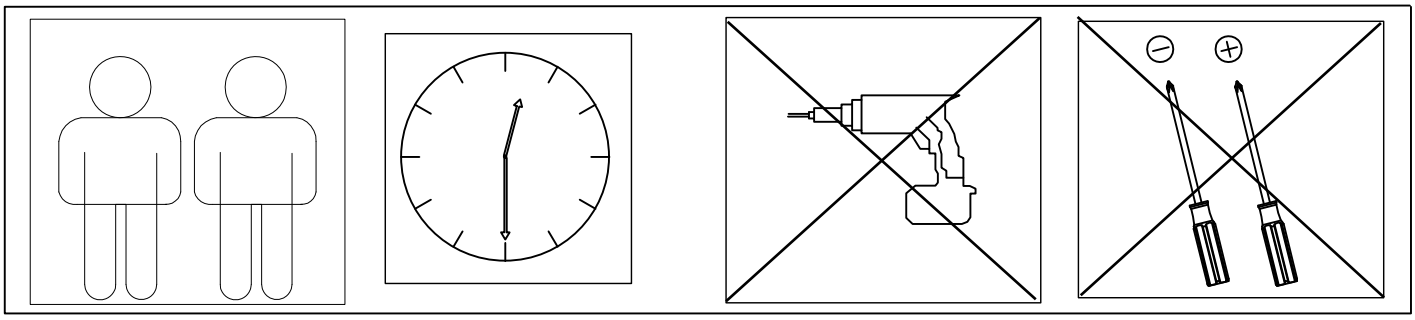

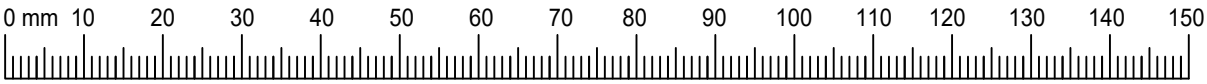

A	×1
	
200*200	

B	×10
	
M6*12mm	

C	×6
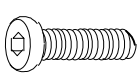	
M6*25mm	

D	×8
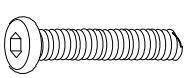	
M6*95mm	

E	×8
	
M6*14mm	

F	×1
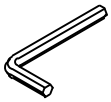	
M4	

1

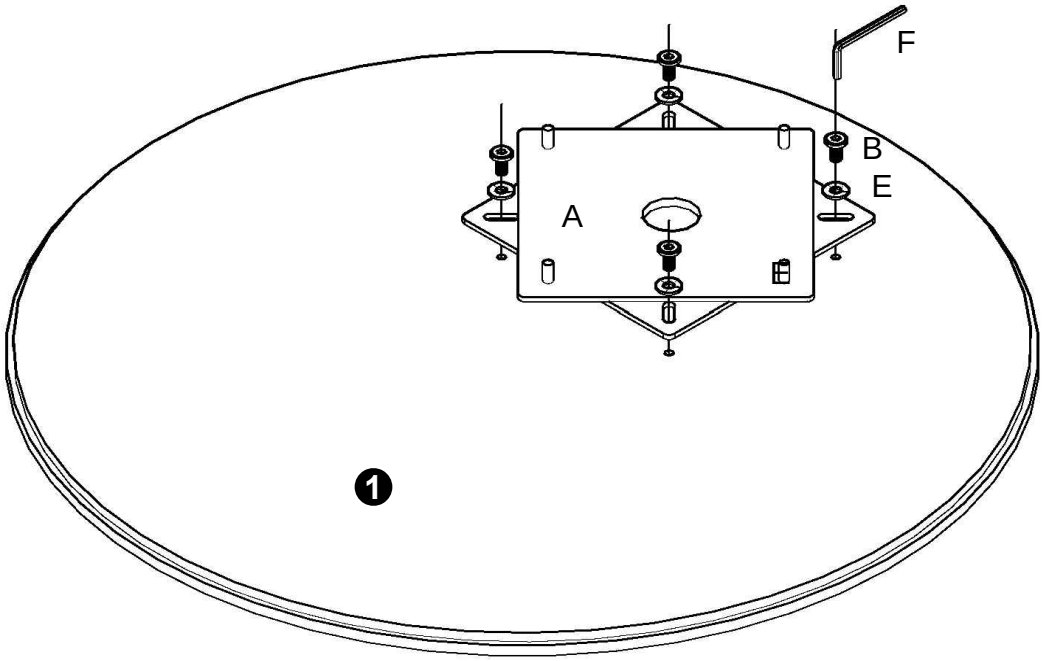

A	×1
	
200*200	

B	×4
	
M6*12mm	

E	×4
	
M6*14mm	

F	×1
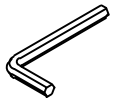	
M4	

2

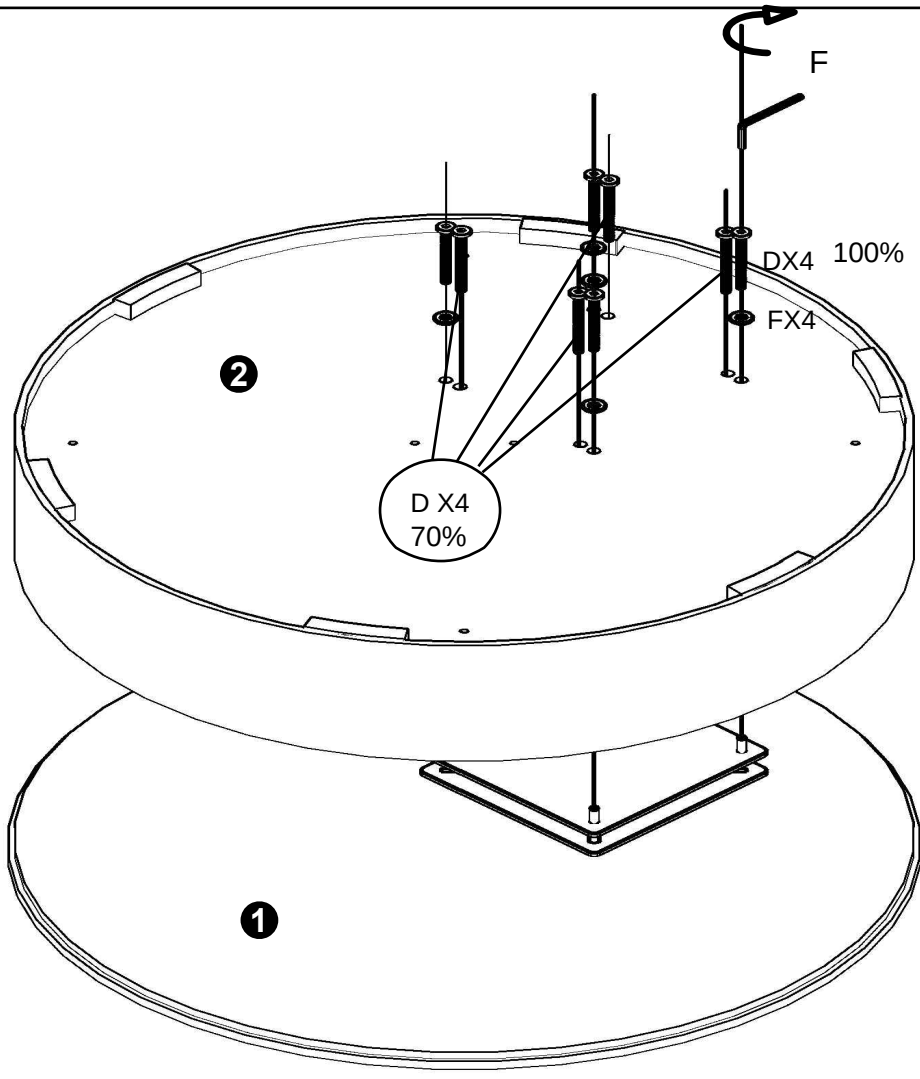

D	×8
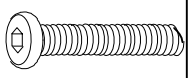	
M6*95mm	

E	×4
	
M6*14mm	

F	×1
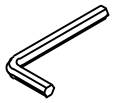	
M4	

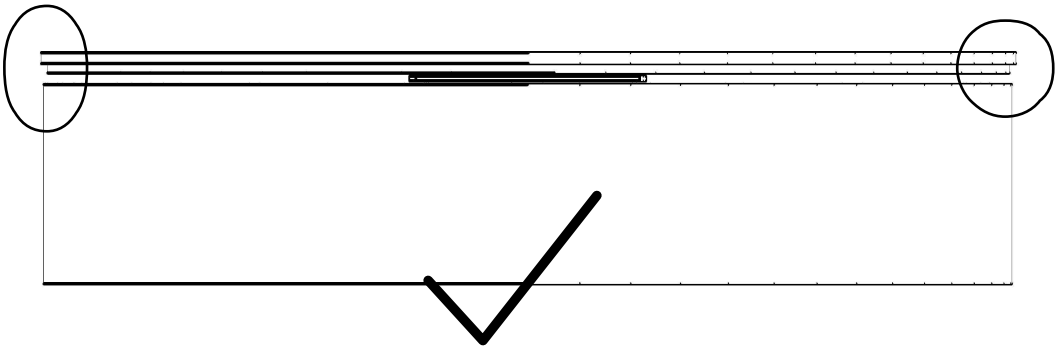

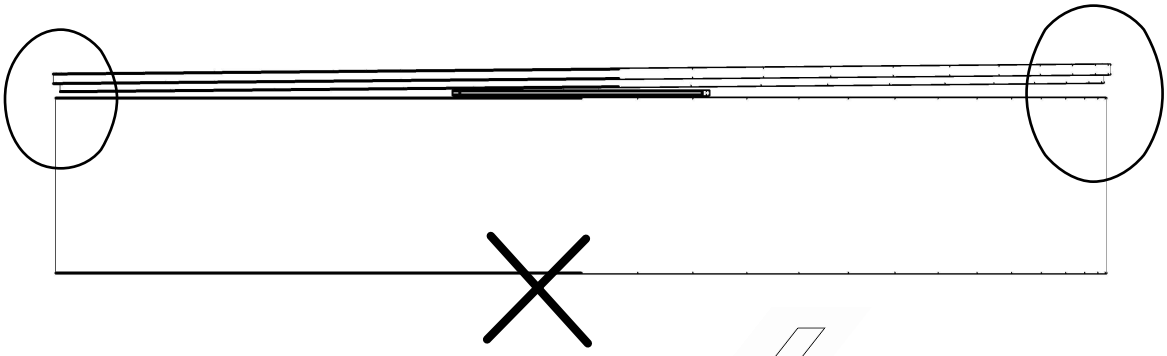

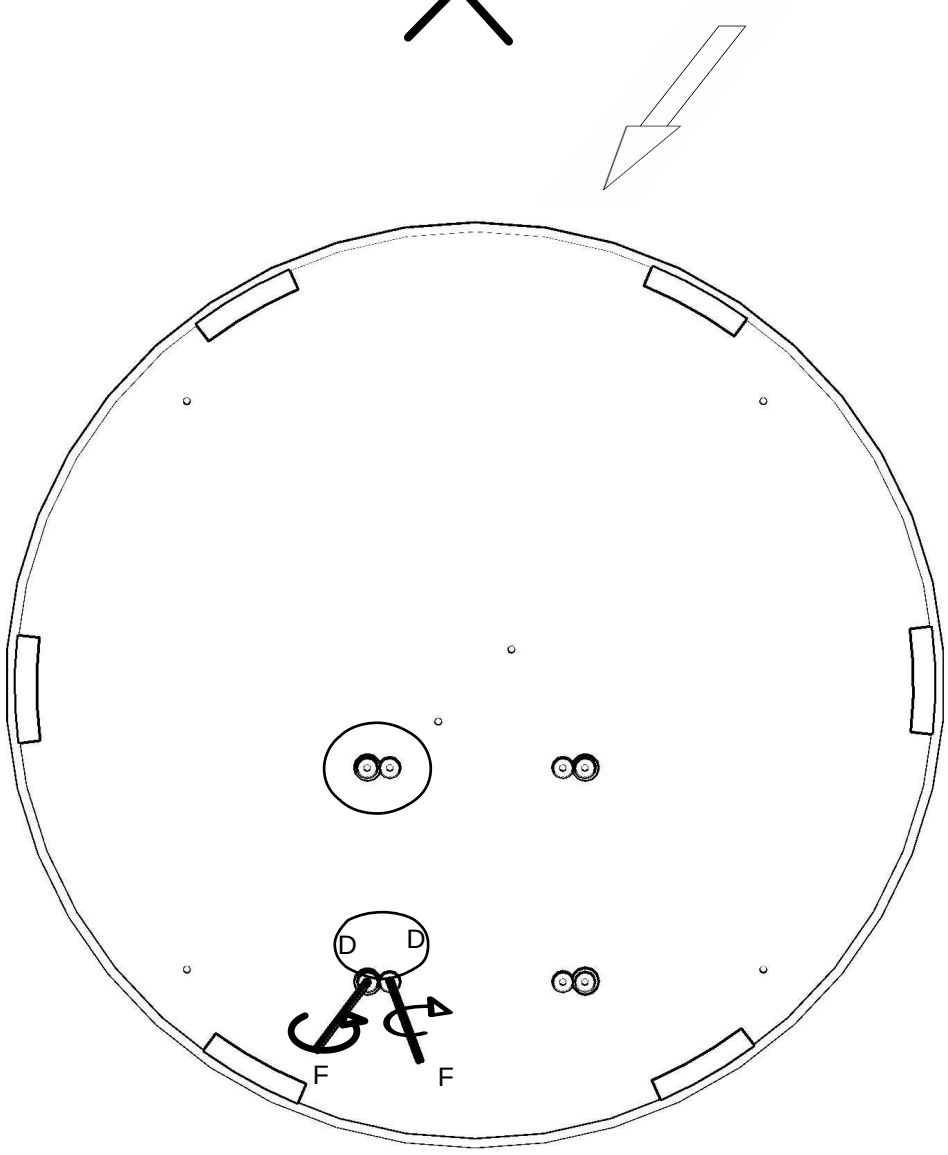
D
D
F
F

3

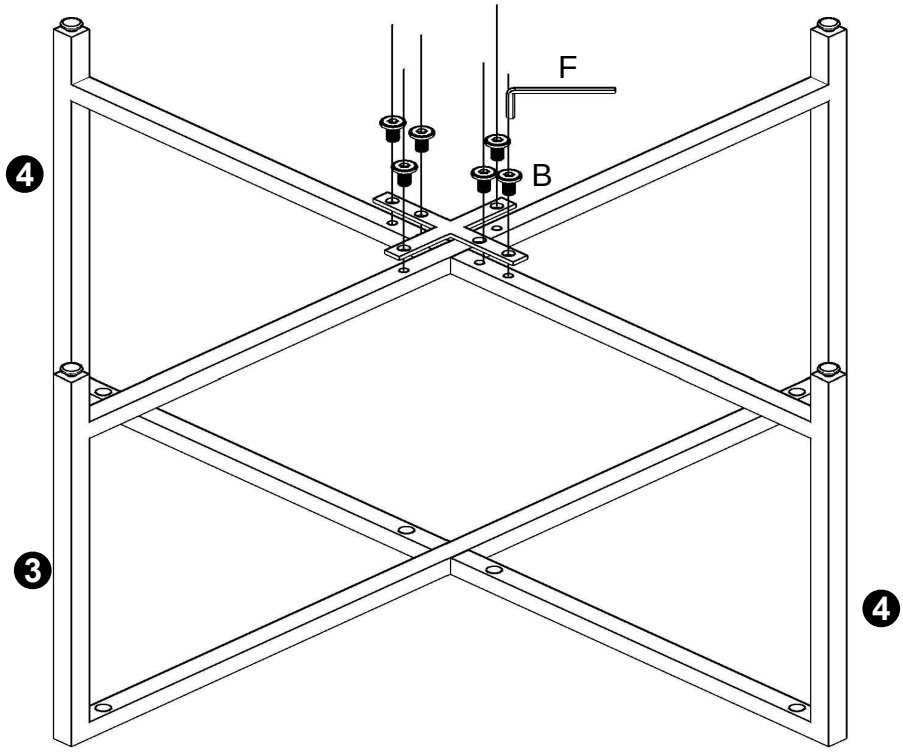

B	×6
	
M6*12mm	

F	×1
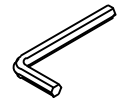	
M4	

4

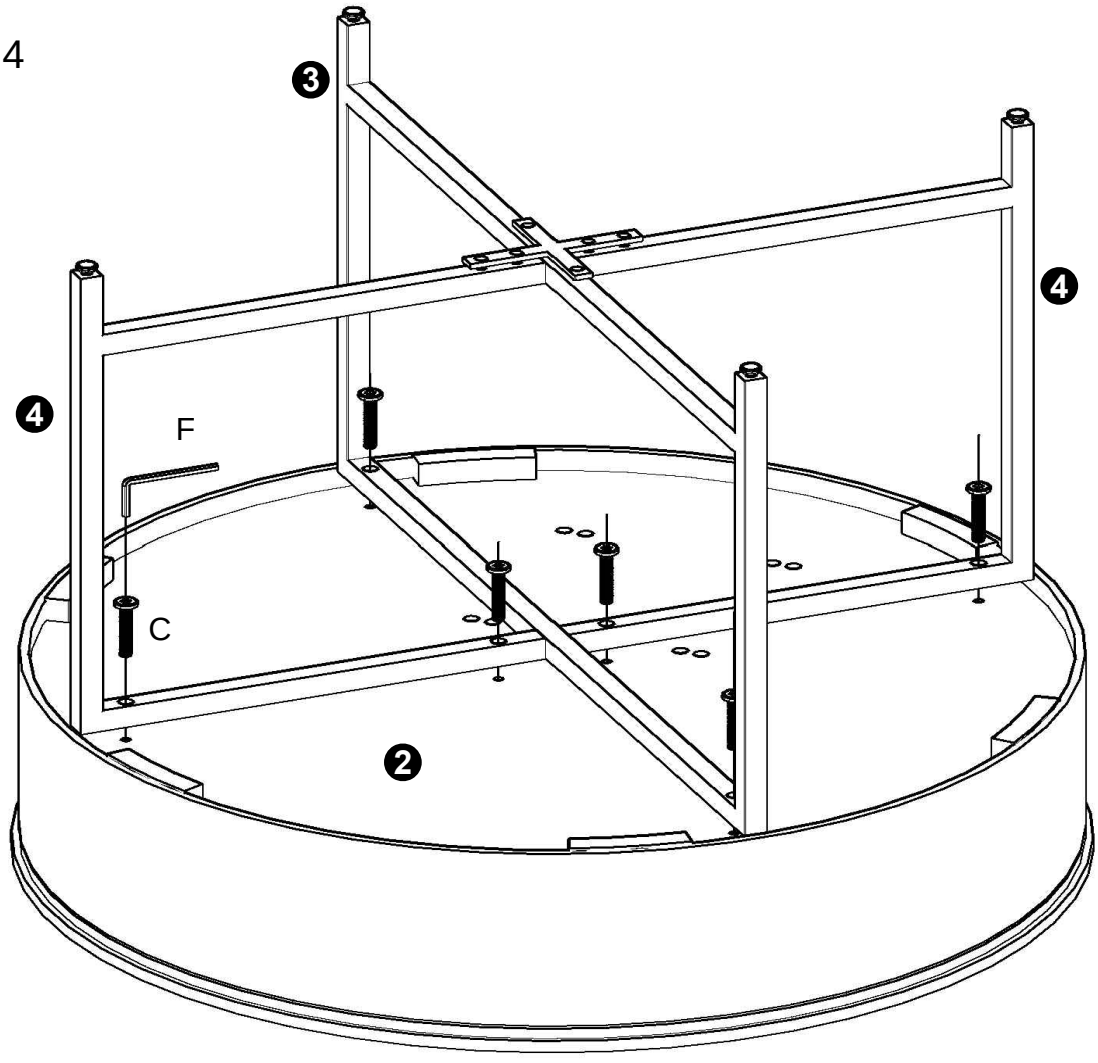

C	×6
	
M6*25mm	

F	×1
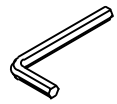	
M4	