LIFE NEW - Kommode, Typ 3T3L

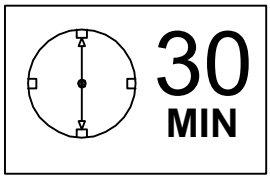

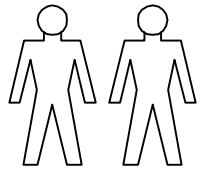

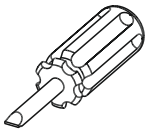

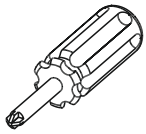

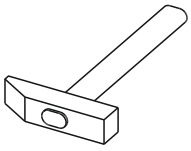

Ø8

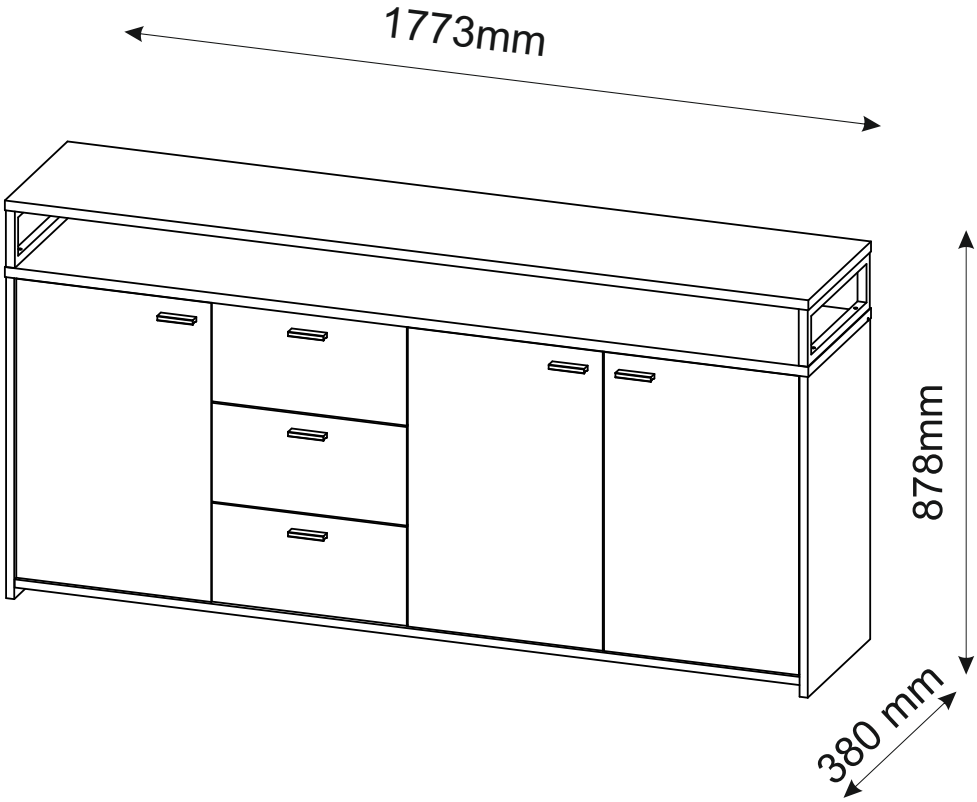

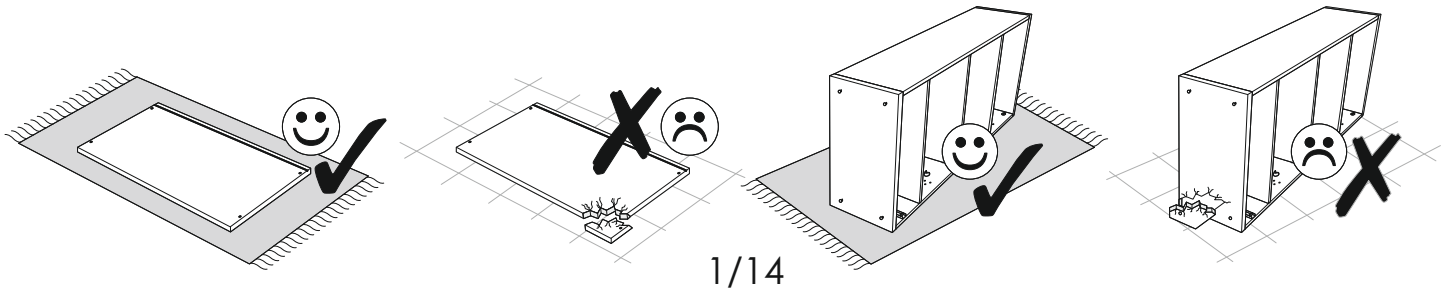

LIFE NEW - Kommode, Typ 3T3L

LIFE NEW - Kommode, Typ 3T23L					
1	1733	376	18	x1	1/3
2	1730	125	18	x1	1/3
3	1773	380	22	x1	1/3
4	1773	380	22	x1	1/3
5	660	430	18	x1	2/3
6	660	430	18	x1	2/3
7	430	218	18	x3	2/3
8	676	425	3	x1	2/3
9	676	434	3	x1	2/3
10	676	868	3	x1	2/3
11	292	363	3	x3	2/3

12	666	356	18	x1	3/3
13	666	356	18	x1	3/3
14	354	157	18	x3	3/3
15	708	378	18	x1	3/3
16	708	378	18	x1	3/3
17	300	160	18	x3	3/3
18	300	160	18	x3	3/3
19	424	336	22	x1	3/3
20	858	336	22	x1	3/3
21	660	430	18	x1	2/3
22					3/3

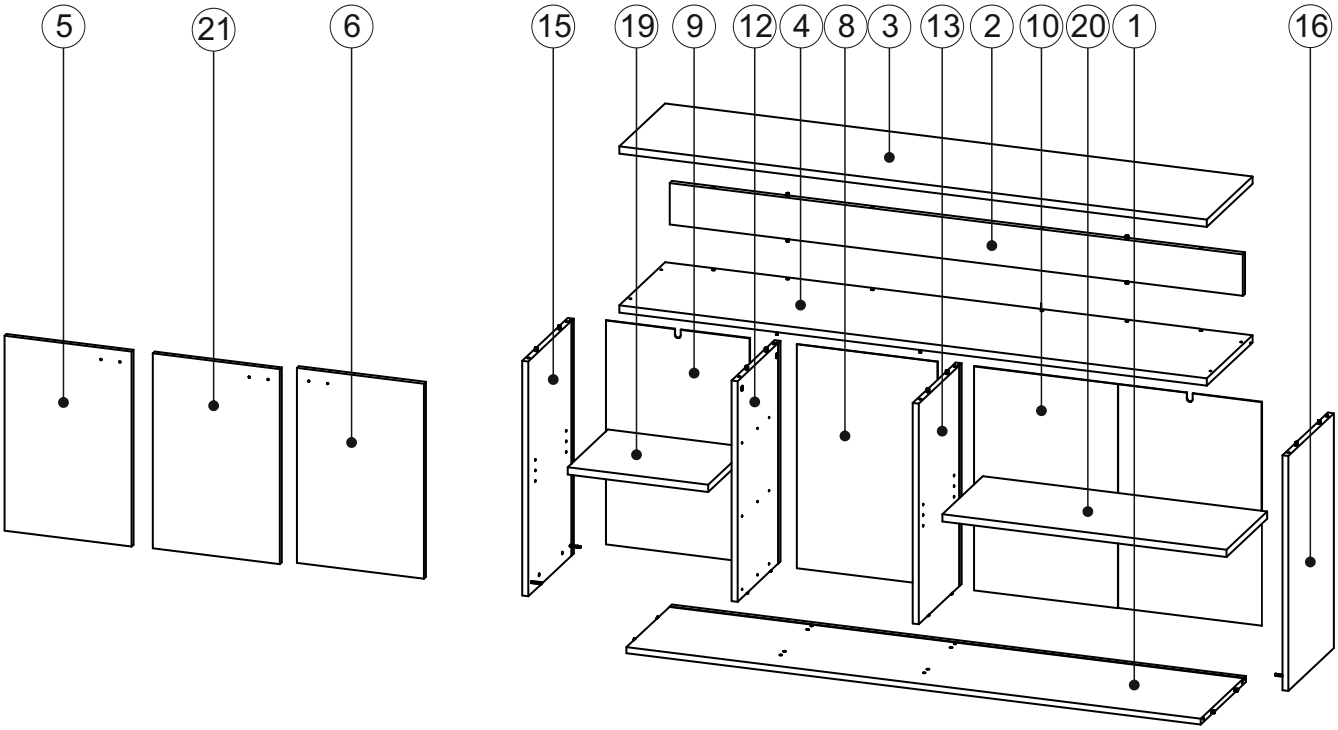

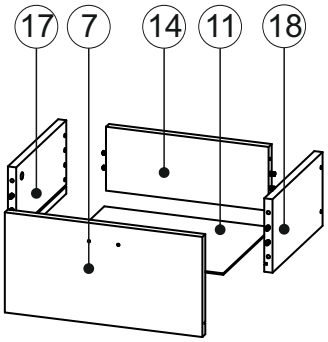

x3

LIFE NEW - Kommode, Typ 3T3L

B0 x8	B1 6.4 x 50 mm x16	B2 f 7 x 70 mm x4
B6 f 7 x 38 mm x4	C0 x12	C2 x28
D0 3 x 15 mm x32	D5 3.5 x 16 mm x26	D10 4 x 16 mm x12
D16 4 x 30 mm x12	D21 5 x 13 mm x20	E0 5 x 50 mm, 8 x 50 mm x2
J4 x4	J5 x2	J6 x6
K 4mm x1	L7 L-80 x6	M1 x32
N1 L-300 x3	P0 x2	Q3 x8
T18 x3	U0 x10	U2 x4
D11 4 x 20 mm x3	T21 x2	

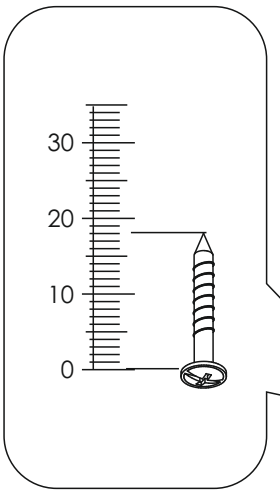

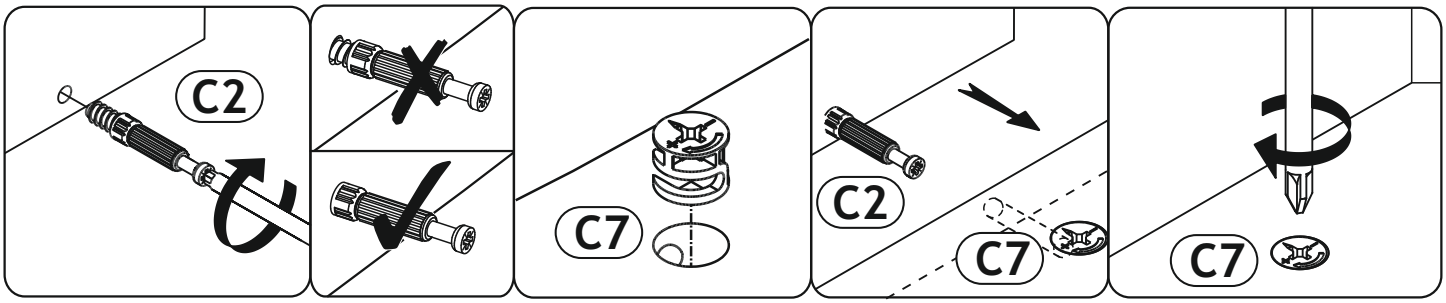
C2
C7
C2
C7
C7

1

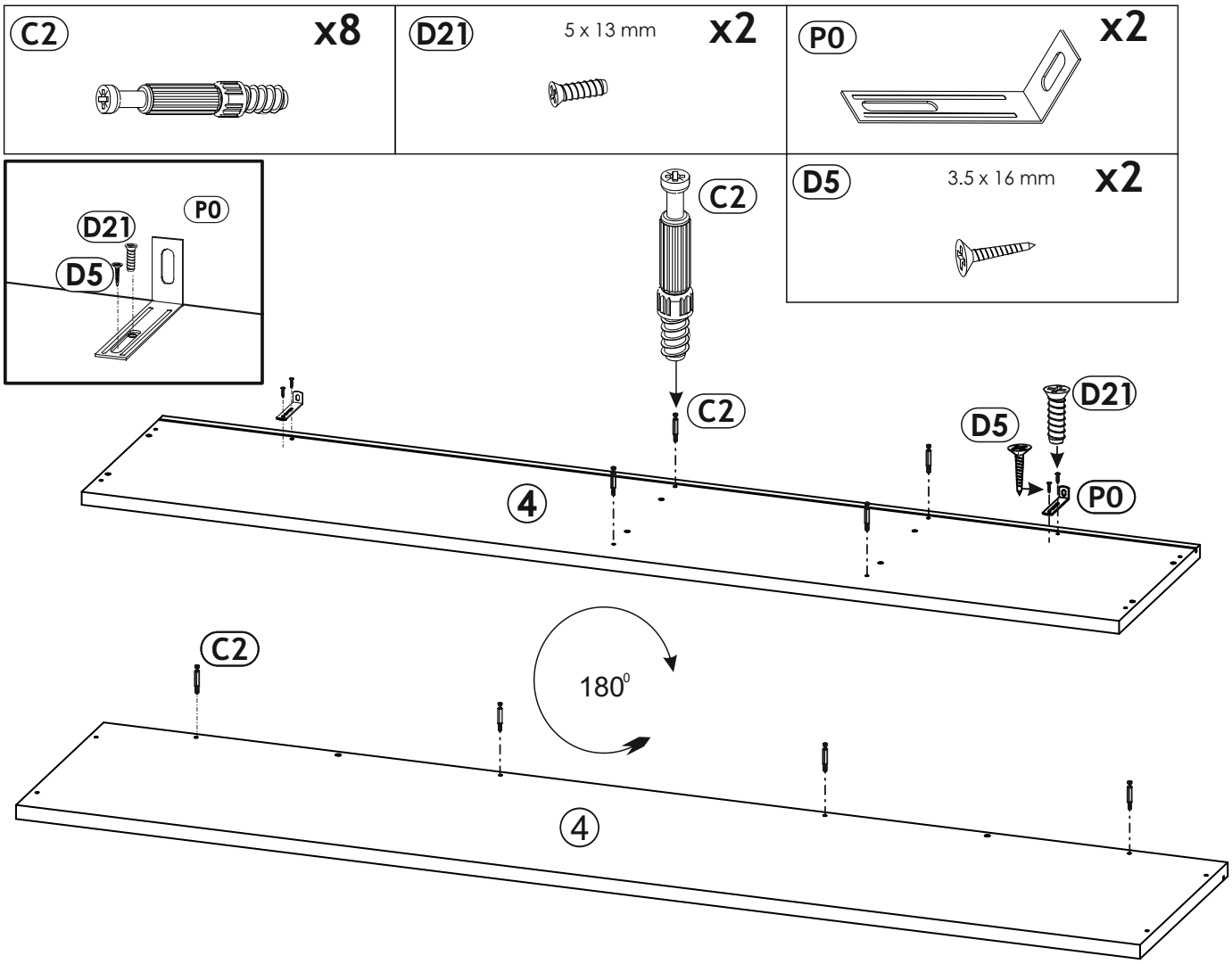
C2
x8
D21
5 x 13 mm
x2
P0
x2
D5
3.5 x 16 mm
x2
D21
P0
D5
C2
C2
D21
D5
P0
4
C2
180°
4

2

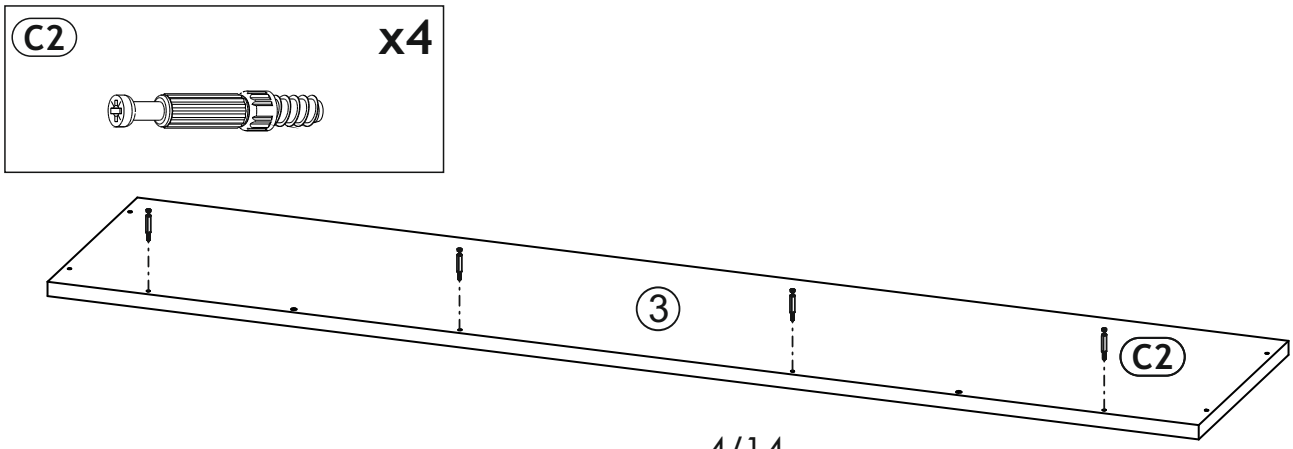
C2
x4
3
C2

3

D11 4 x 20 mm	x3	T18	x3

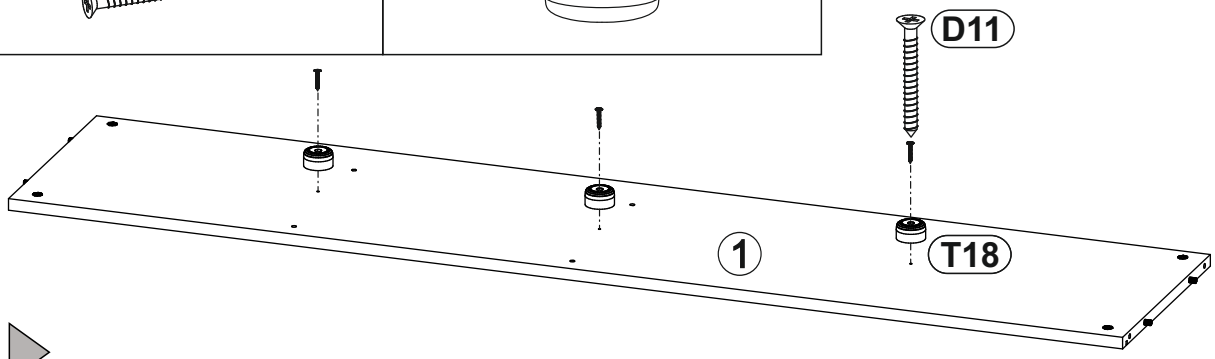

4

C2	x4	Q3	x4	J6	x4

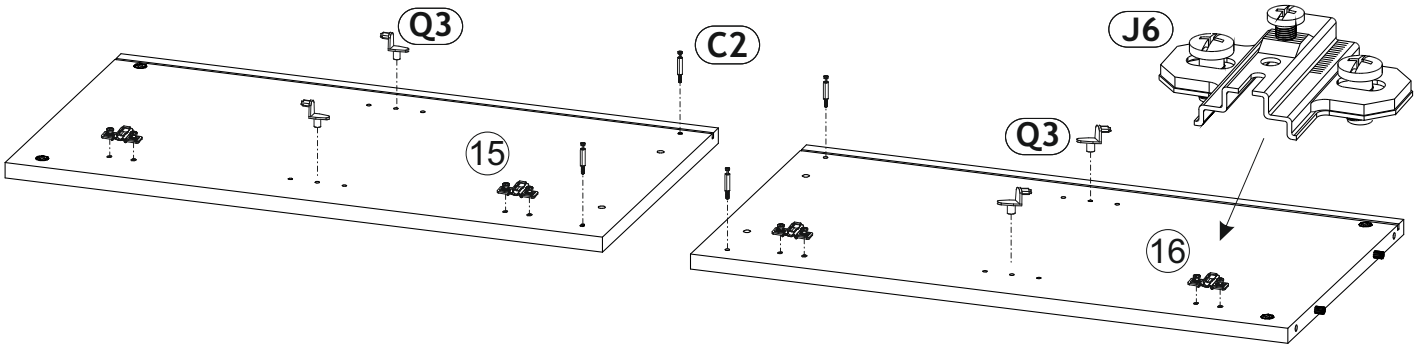

5

D5 3.5 x 16 mm	x3	D21 5 x 13 mm	x9	N1 L-300	x3
				Q3	x2

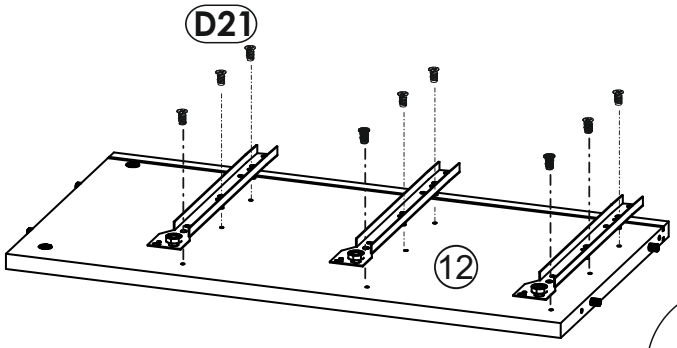

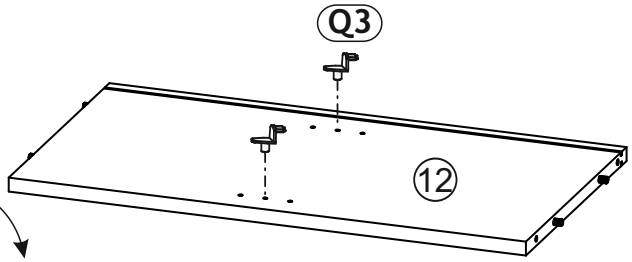

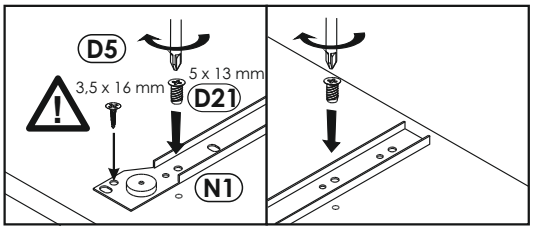

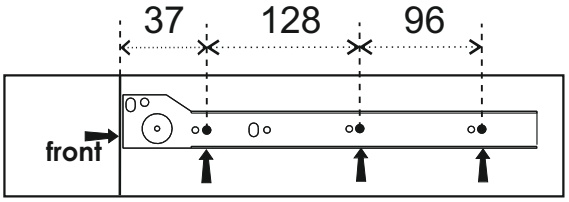

6

D5 3.5 x 16 mm x3	D21 5 x 13 mm x9	N1 L-300 x3
	J6 x2	Q3 x2

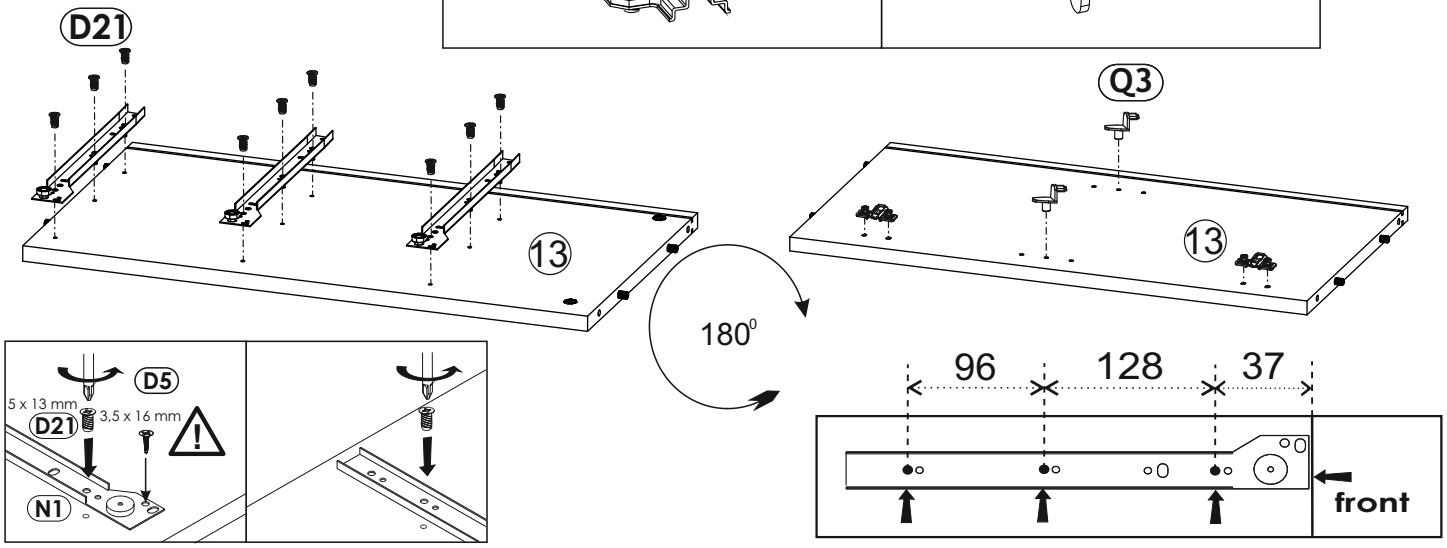

7

D10 4 x 16 mm x12	D16 4 x 30 mm x6	J4 x4
J5 x2	L7 L-80 x3	

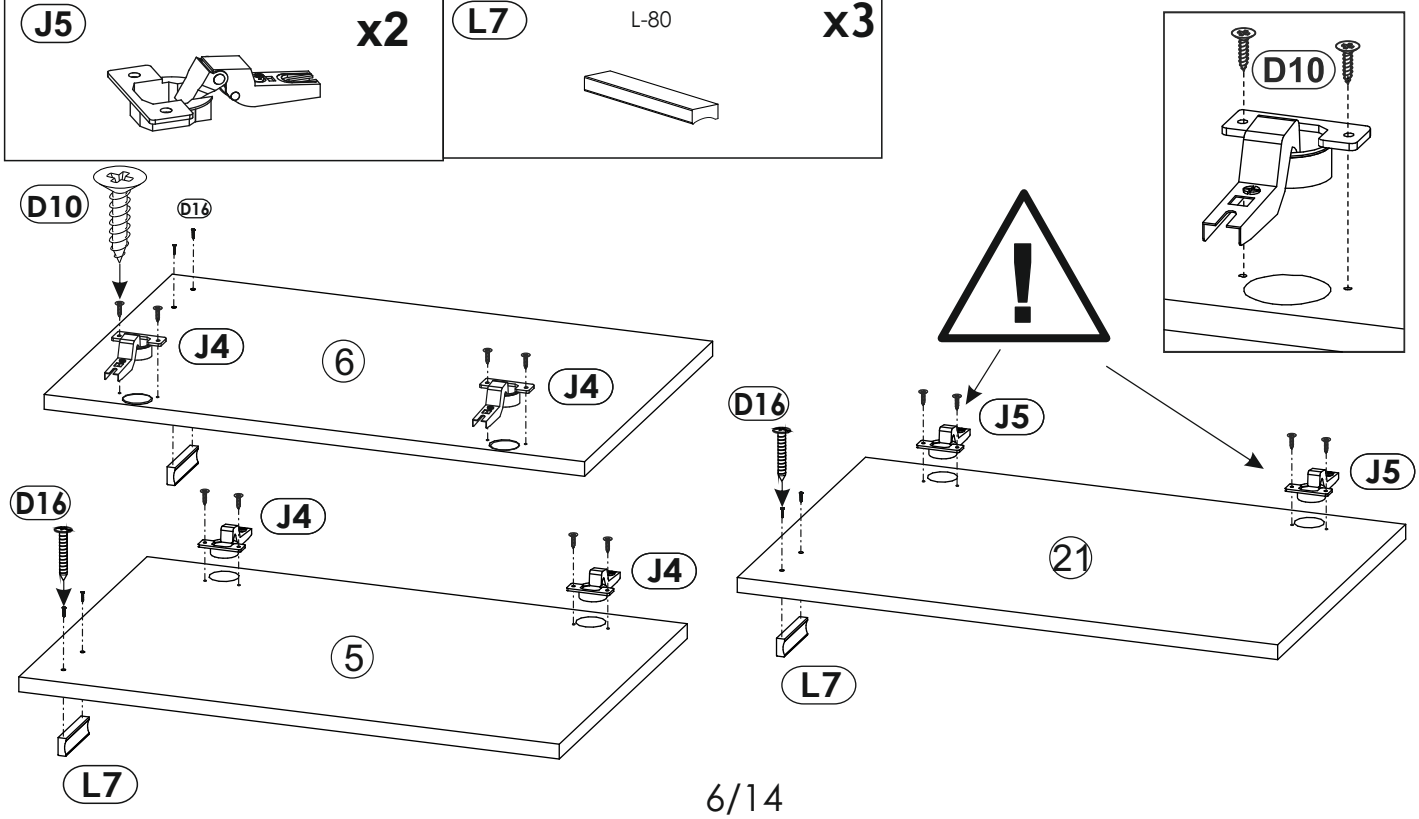

8

B1	K
6.4 x 50 mm x4	4mm x1

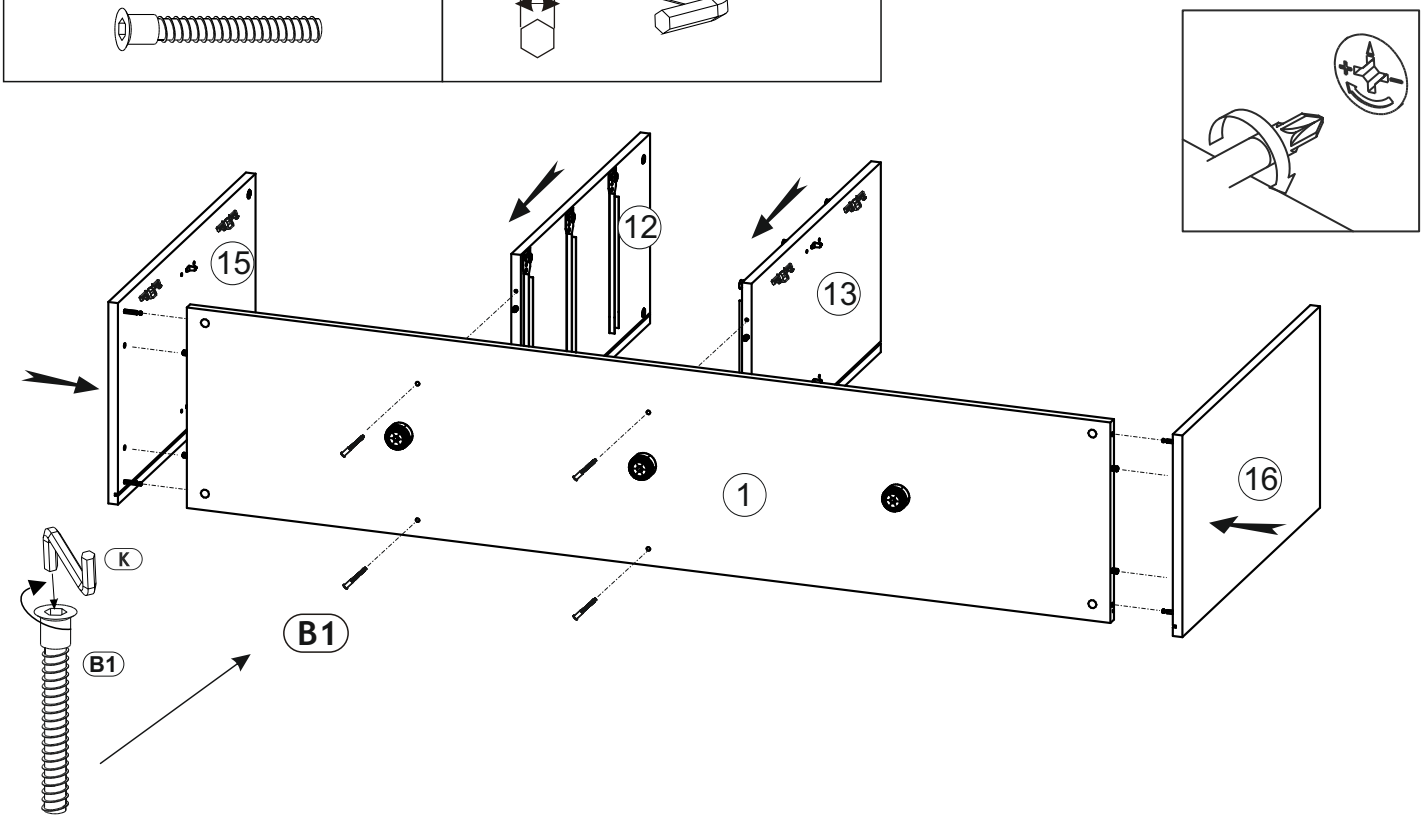

9

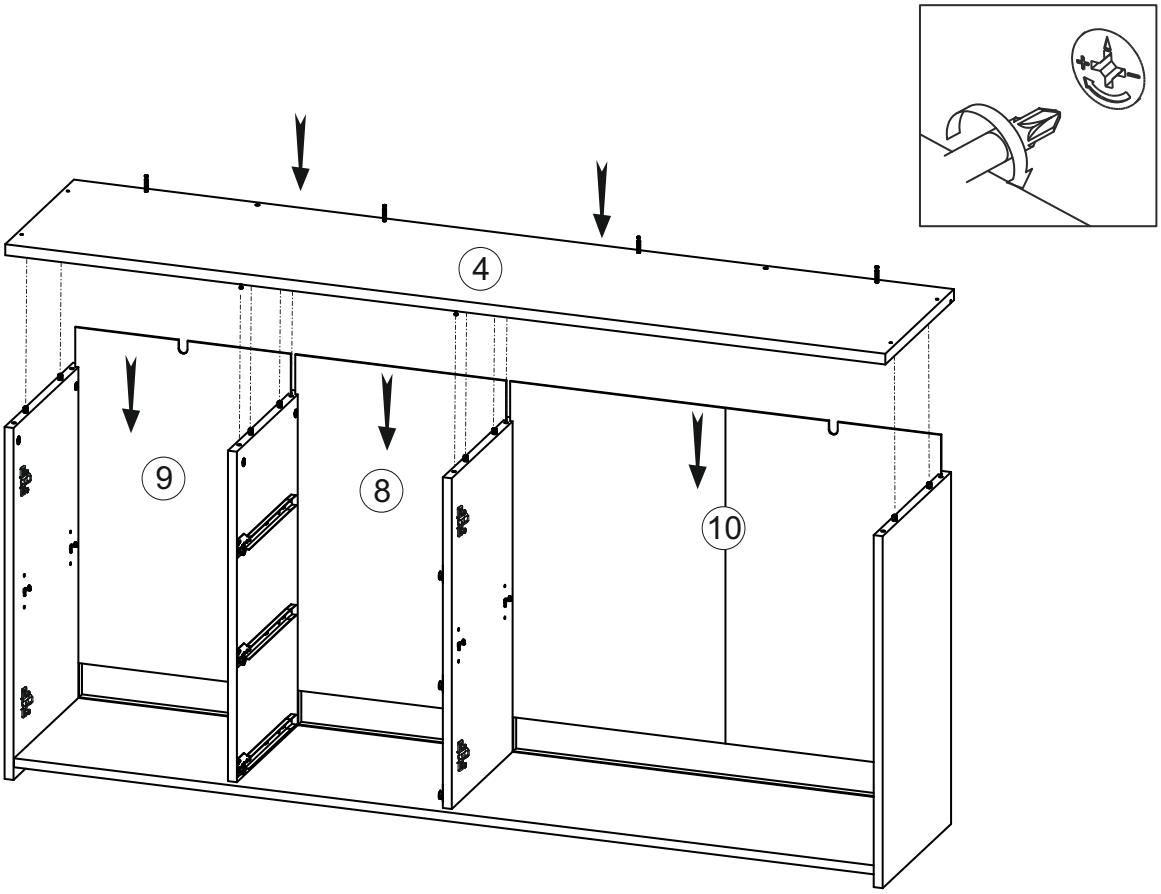

10

B2	K
f 7 x 70 mm x4	4mm x1

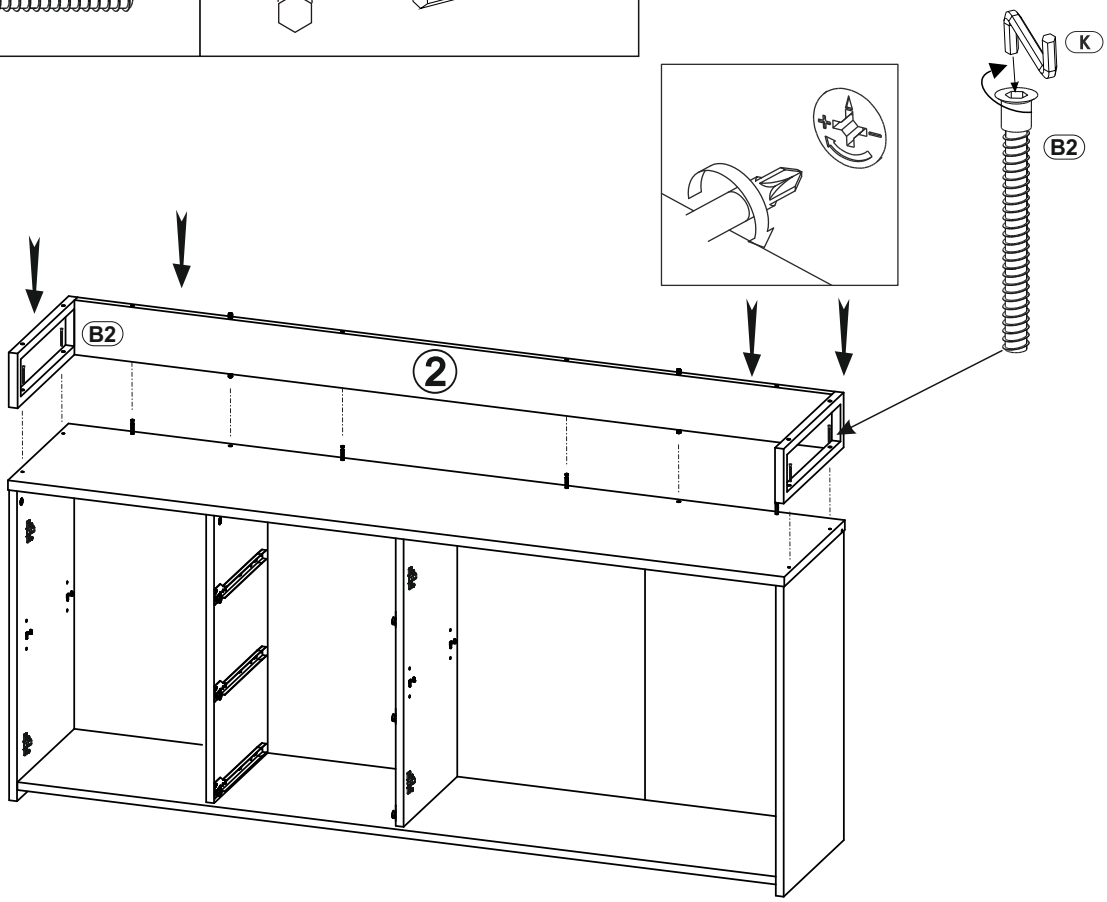

11

B6	K	T21
f 7 x 38 mm x4	4mm x1	x2

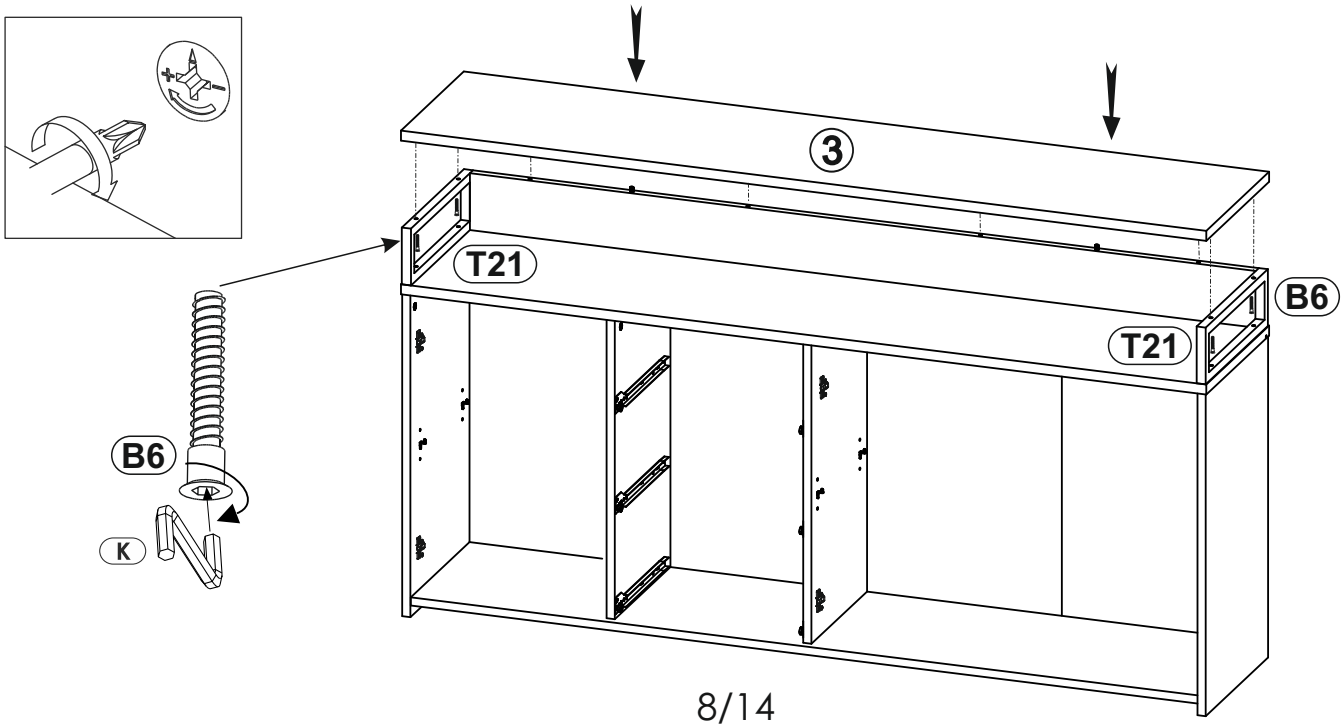

12

D0 3 x 15 mm x20	M1 x20
U2 x4	

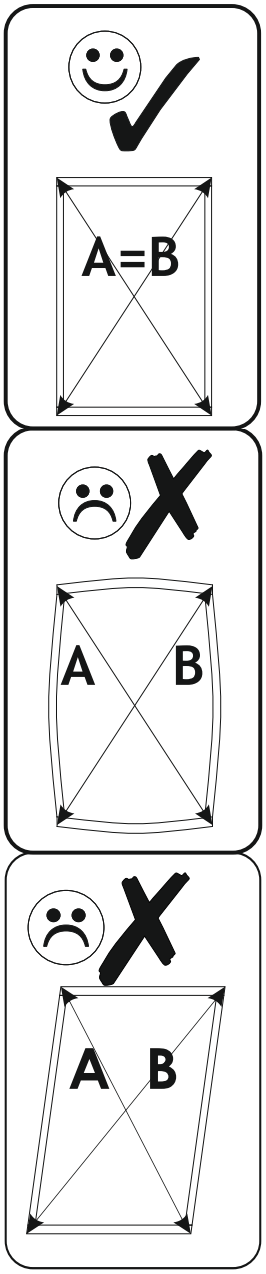

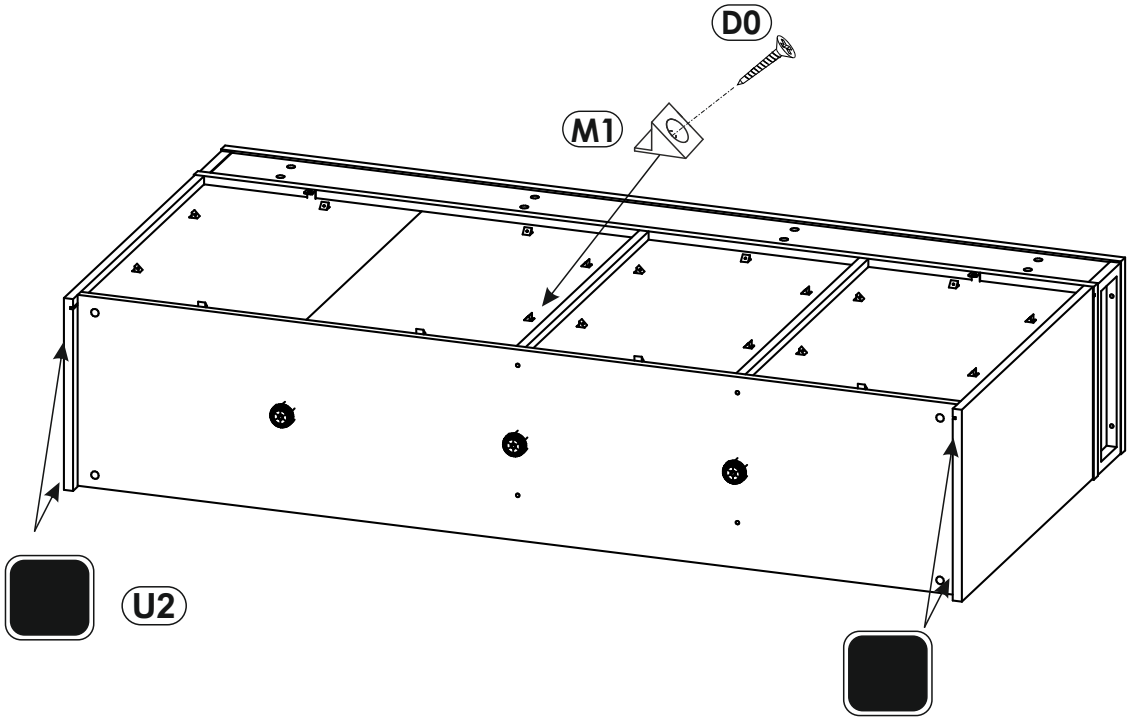

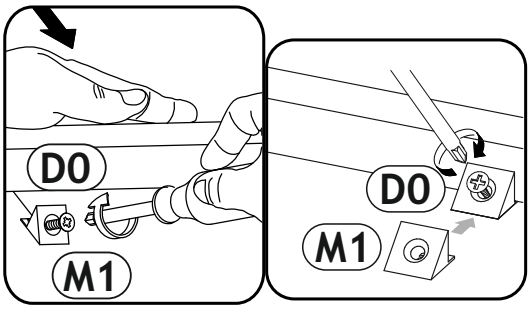

13

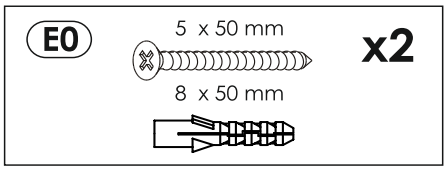

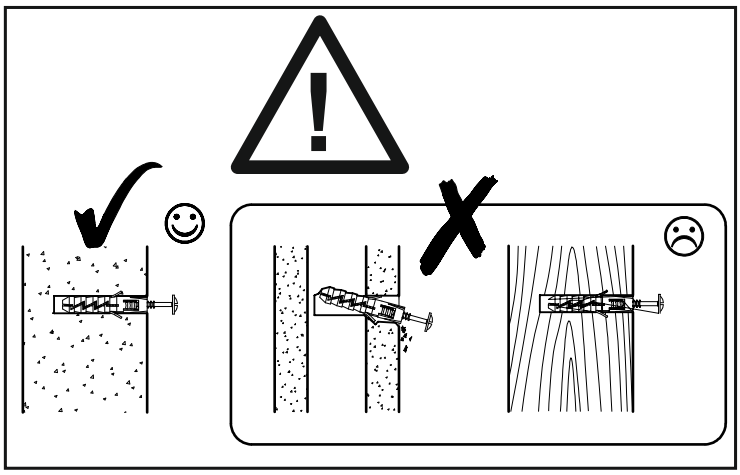

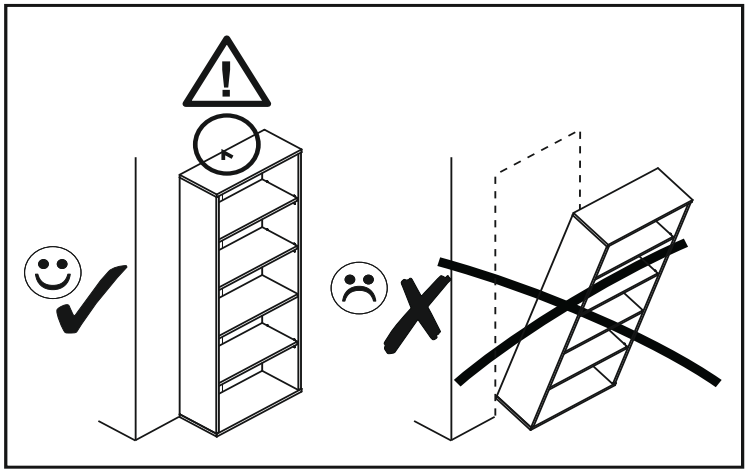

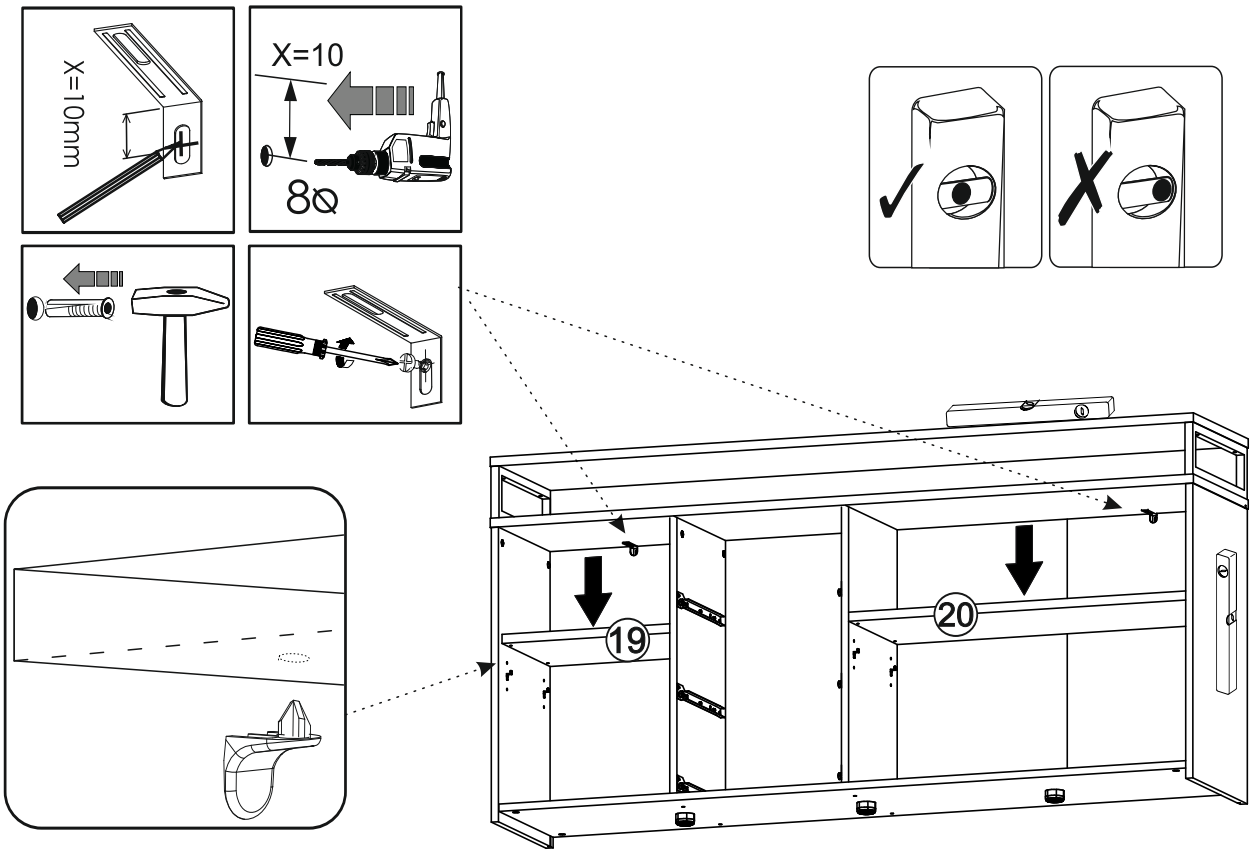

14

C2 x12	D16 4 x 30 mm x6	L24 L-80 x3
U0 x6		

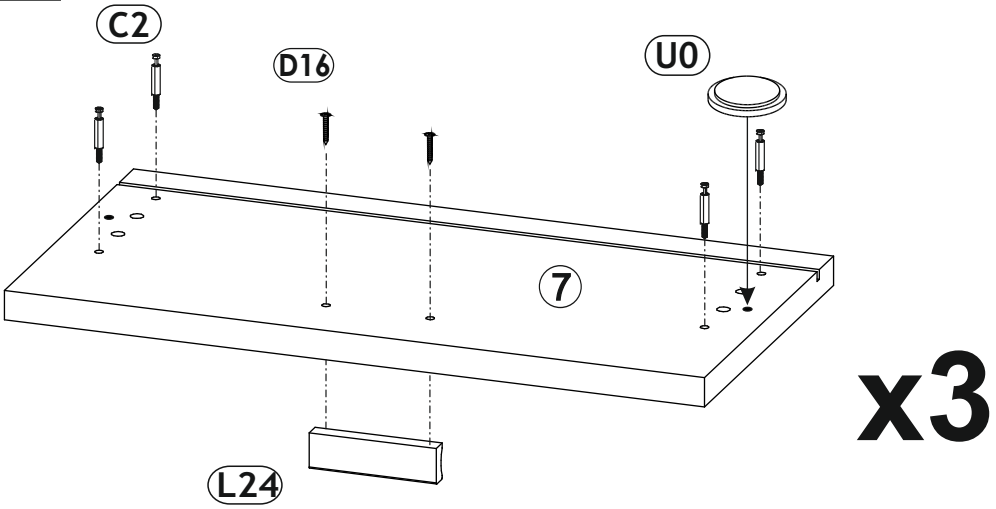

15

B1 6.4 x 50 mm x12	K 4mm x1

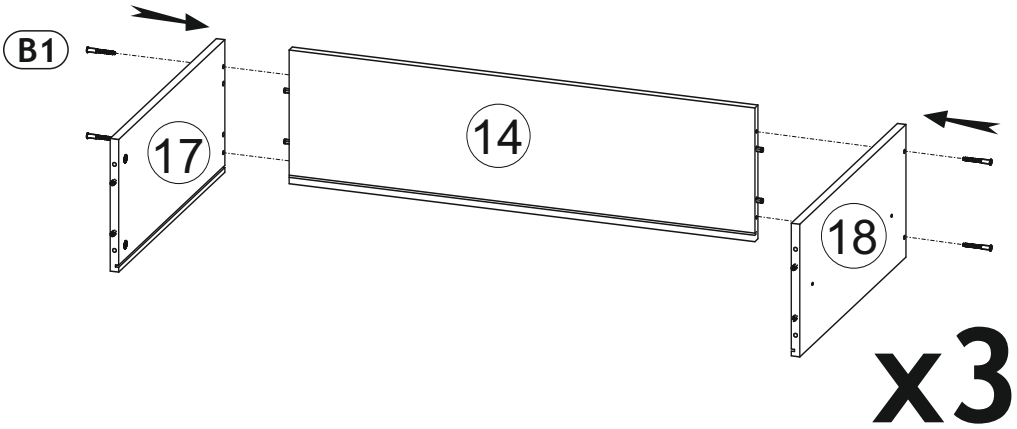

16

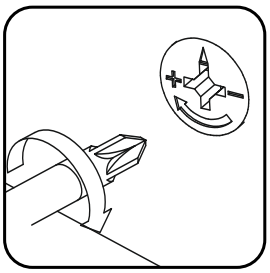

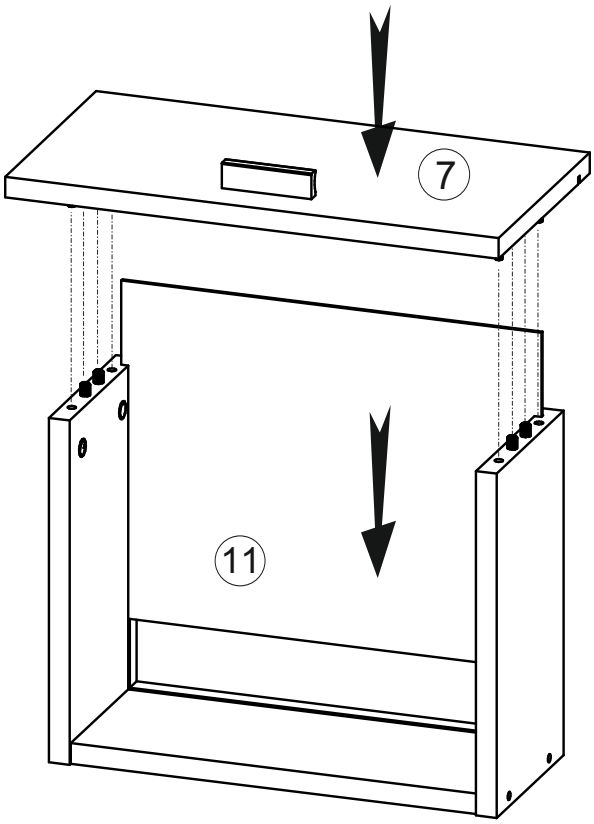

x3

17

D0 3 x 15 mm x12	M1 x12 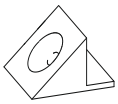

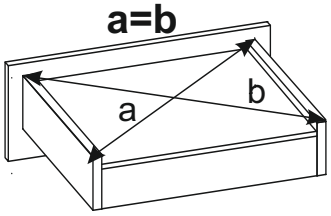

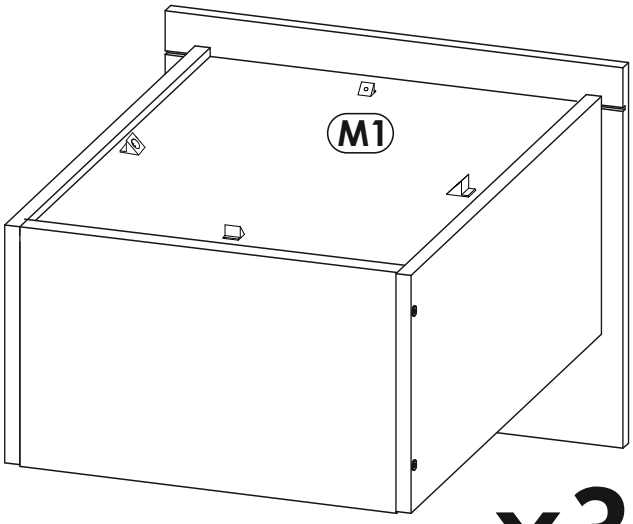

x3

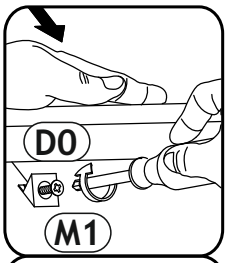

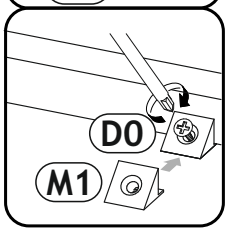

18

D5	3.5 x 16 mm	x18	N1	L-300 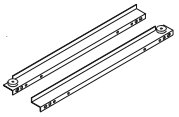	x6

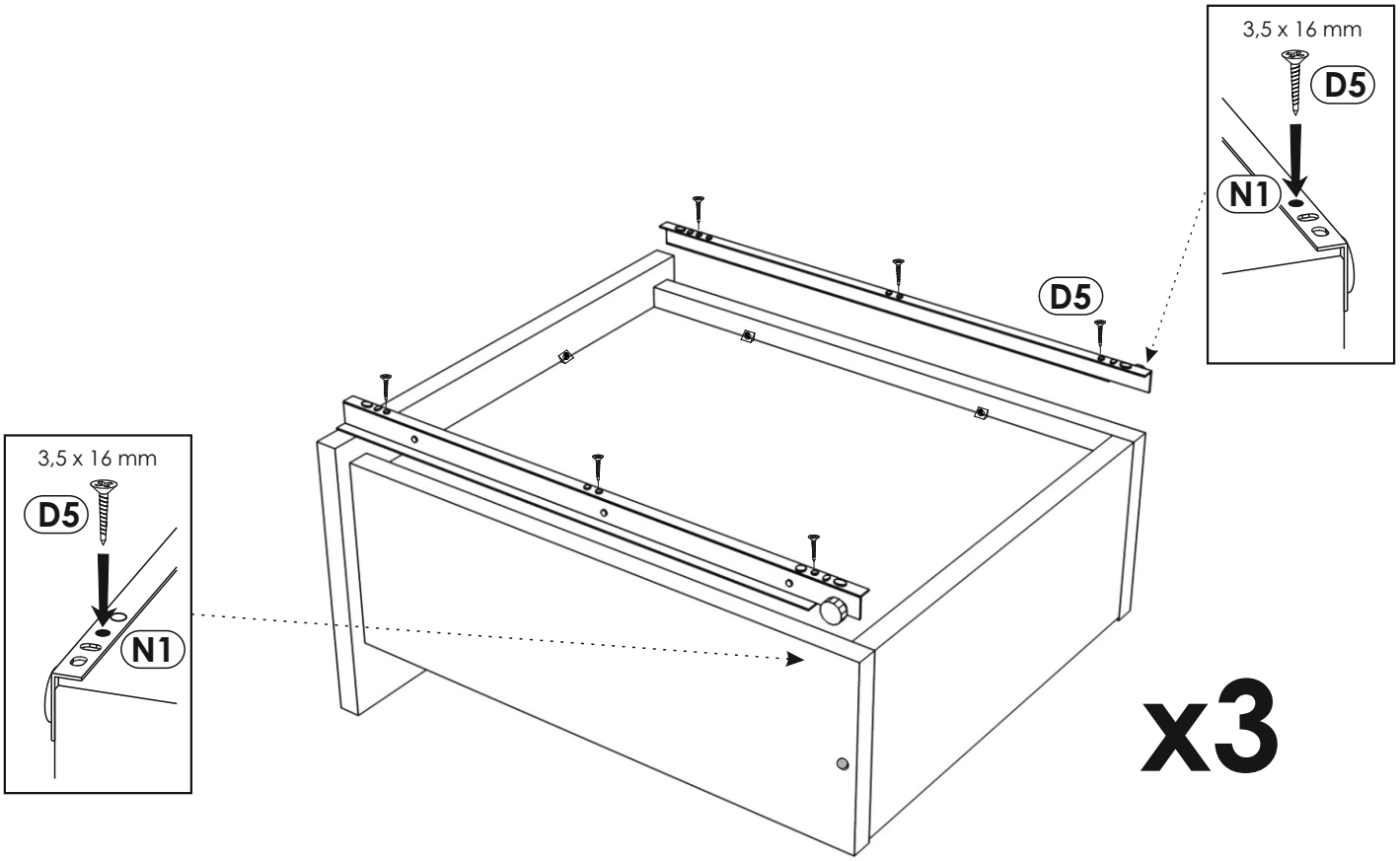

19
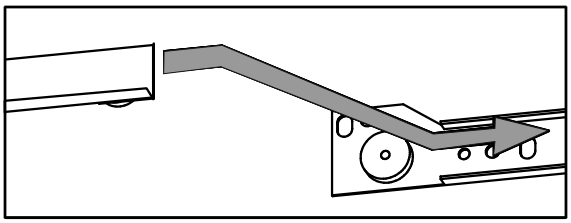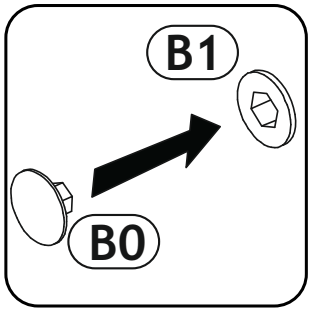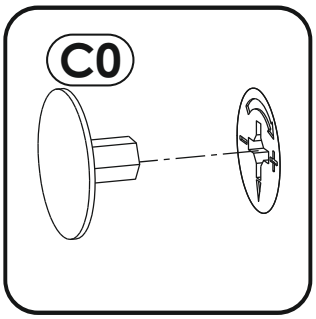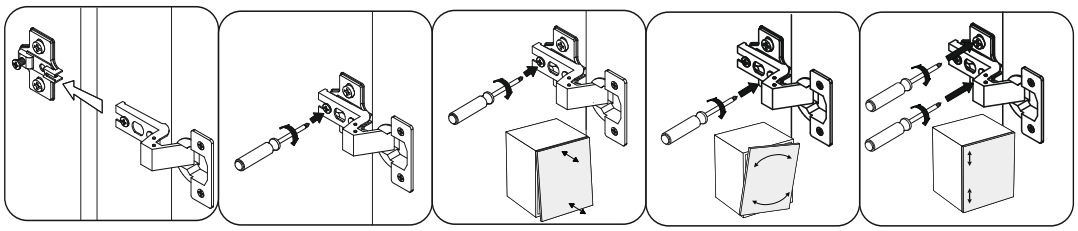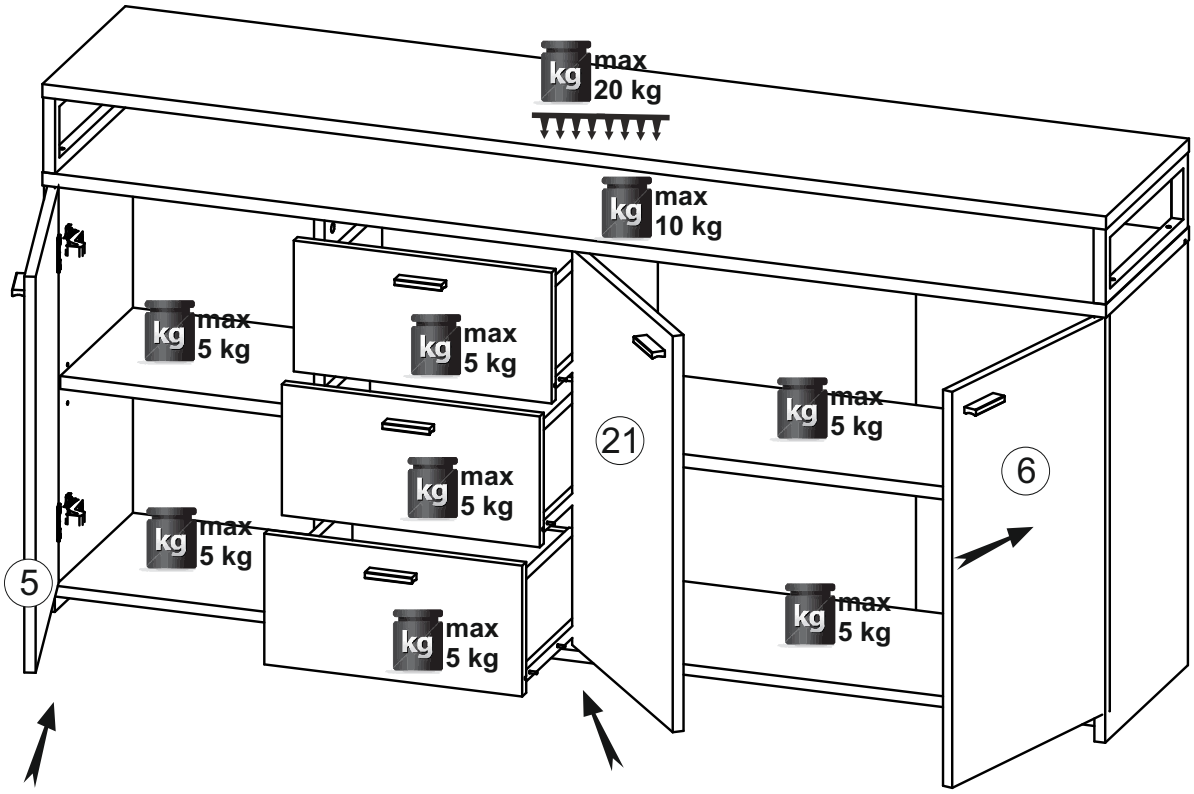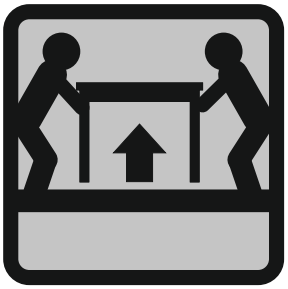
B0 x8	C0 x12