FRONT VIEW

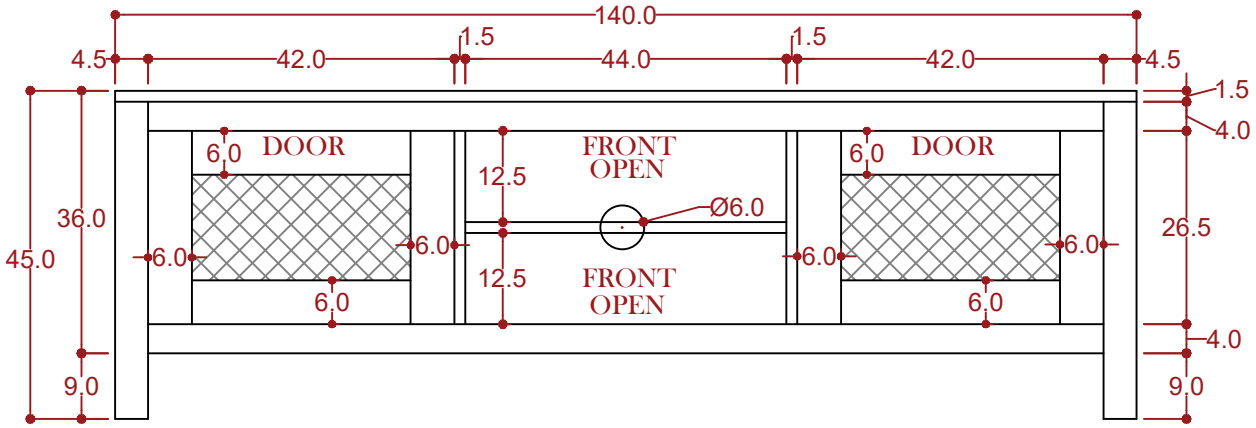

SIDE VIEW

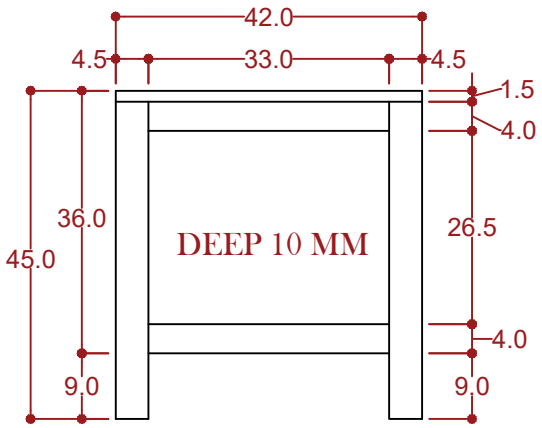

TOP VIEW

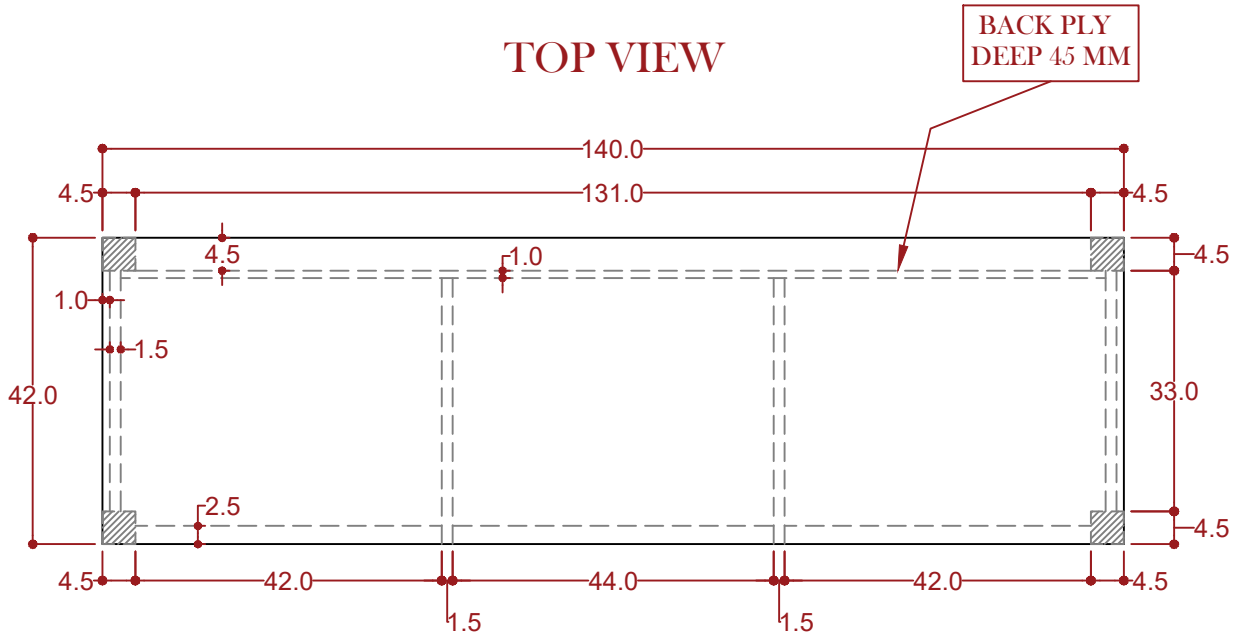

BACK IN PLY.

JC ANTIQUES & CRAFTS

G-165,167 SITAPURA INDUSTRIAL AREA, JAIPUR (RAJ)

TV CABINET	COLLECTION	
	MATERIAL	ACACIA WOOD
SIZE :-140x42x45 cm.	PROPOSED BY	Kuldeep Sharma
CODE NO.- JC-99232	DRAWING NO.	1 Sheet Of 1
SCALE :- 1:1	REVISION	1.0
	DATE	28-Sep-2020