B20064LO / 37230033-05
B20065LO / 37230033-06

Collett's Monde

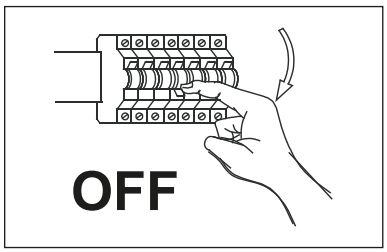

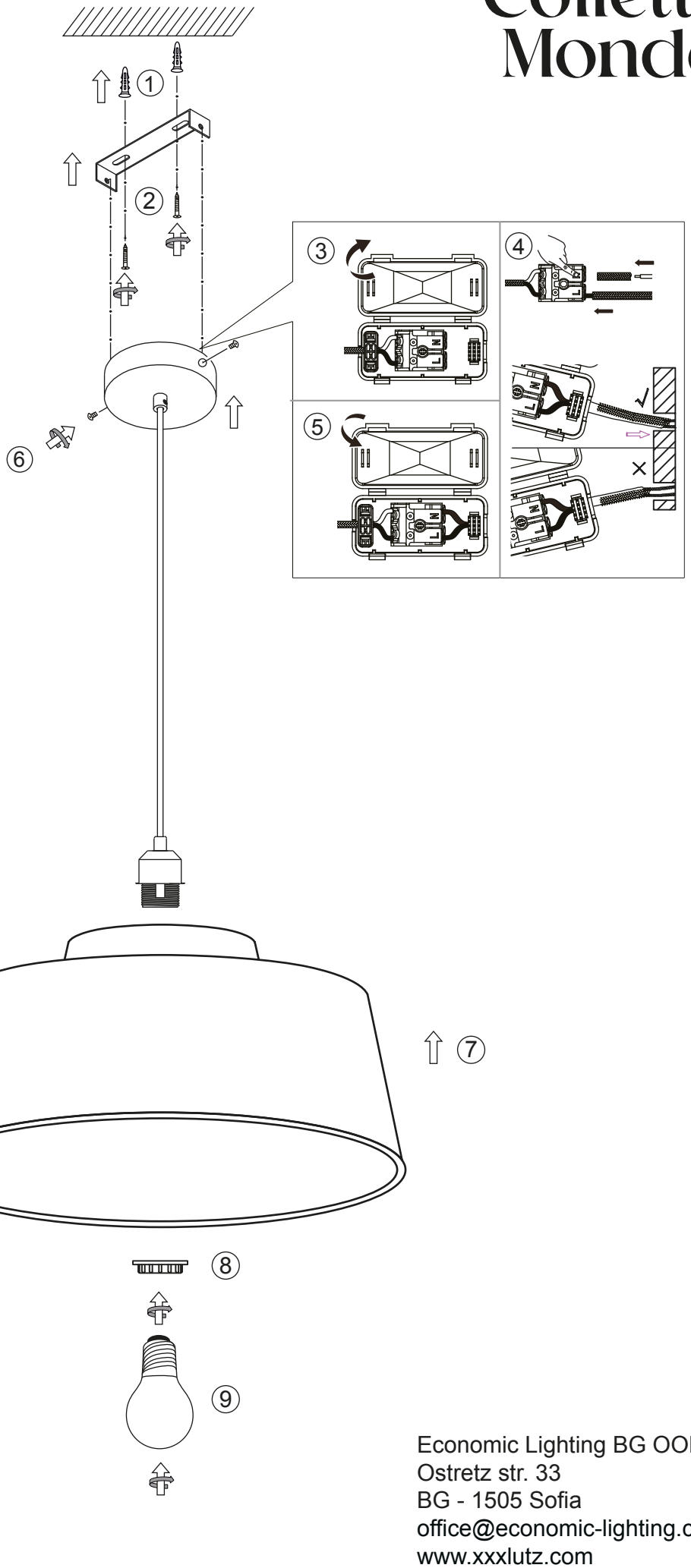

excl. 1x E27 max 25W
AC 220-240V~50/60Hz

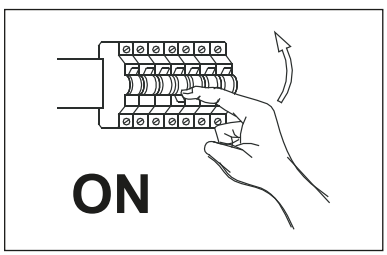

Economic Lighting BG OOD
Ostretz str. 33
BG - 1505 Sofia
office@economic-lighting.com
www.xxxlutz.com