# LIZA

**05860001 / 03**
**05860001 / 04**
**05860001 / 05**

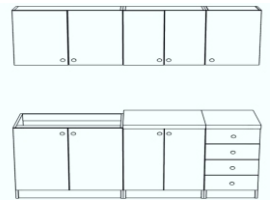

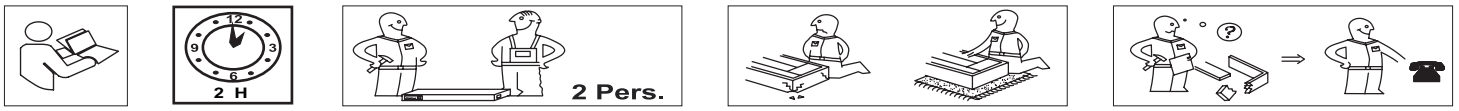


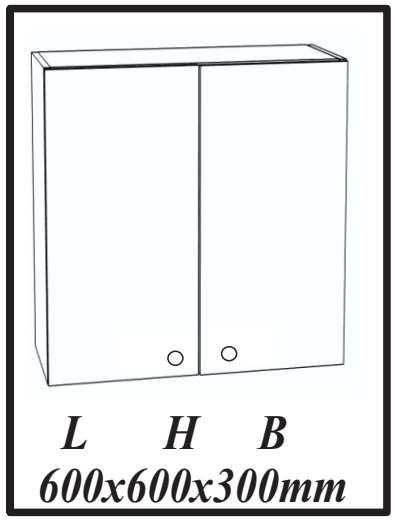


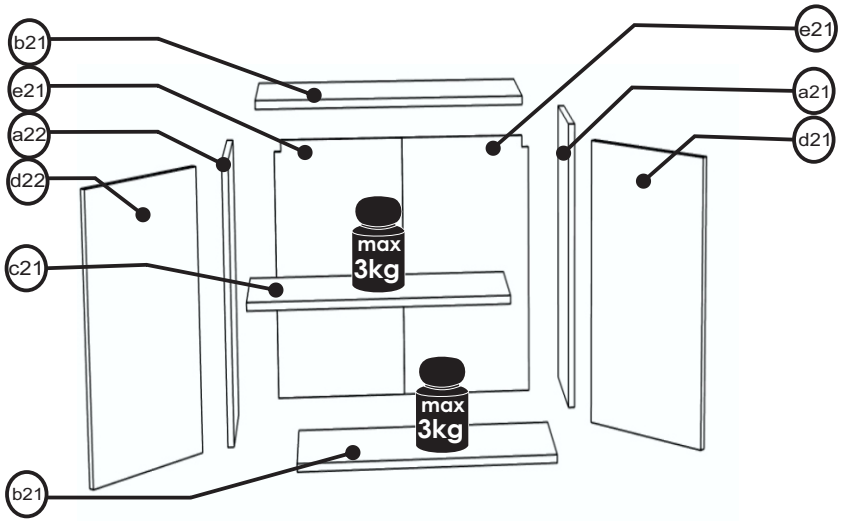


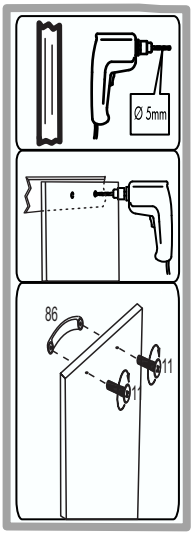


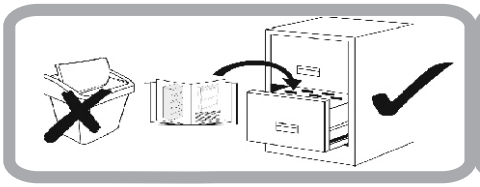

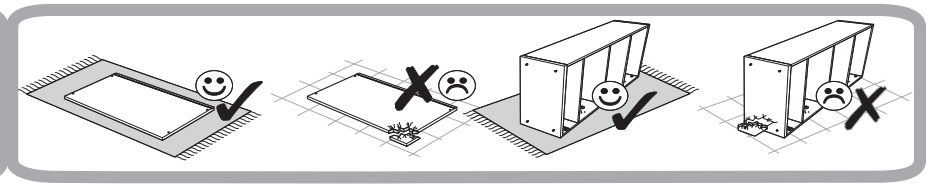

| | | | pcs. | box |
|---|---|---|---|---|
| 1 | a21 | 600mm x 270mm x 16mm | 1 | 5/7 |
| 2 | a22 | 600mm x 270mm x 16mm | 1 | 5/7 |
| 3 | b21 | 568mm x 270mm x 16mm | 2 | 5/7 |
| 4 | c21 | 568mm x200mm x 16mm | 1 | 5/7 |
| 5 | d21 | 596mm x 296mm x 16mm | 1 | 5/7 |
| 6 | d22 | 596mm x 296mm x 16mm | 1 | 5/7 |
| 7 | e21 | 582mm x 582mm x 3.2mm | 1 | 5/7 |

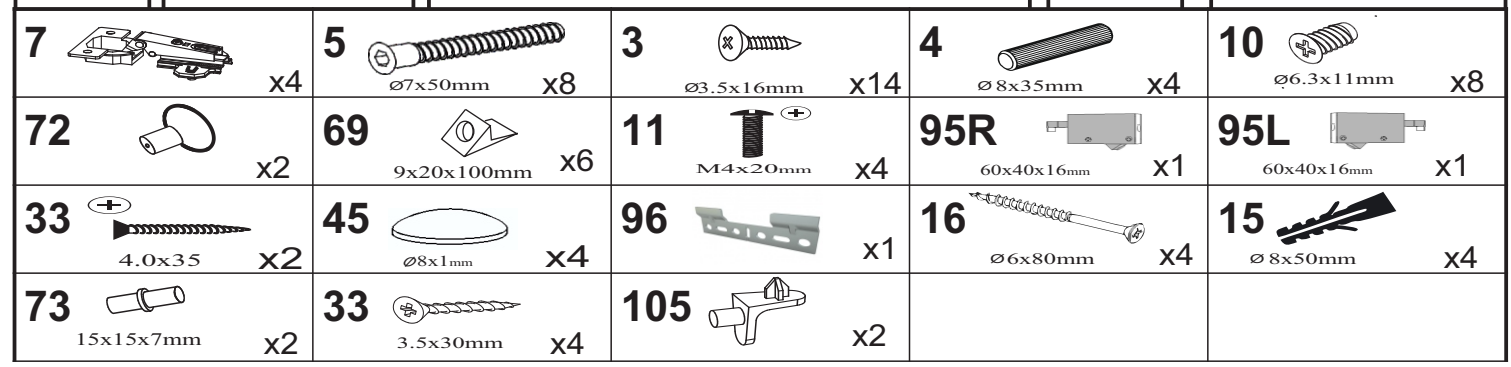


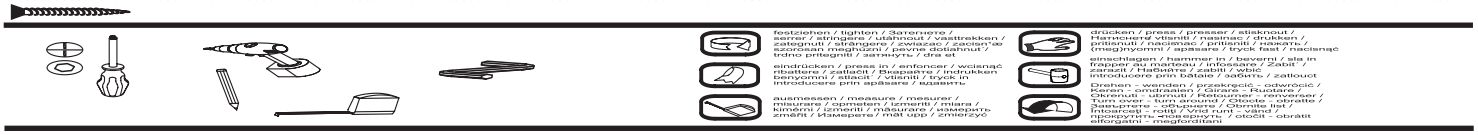

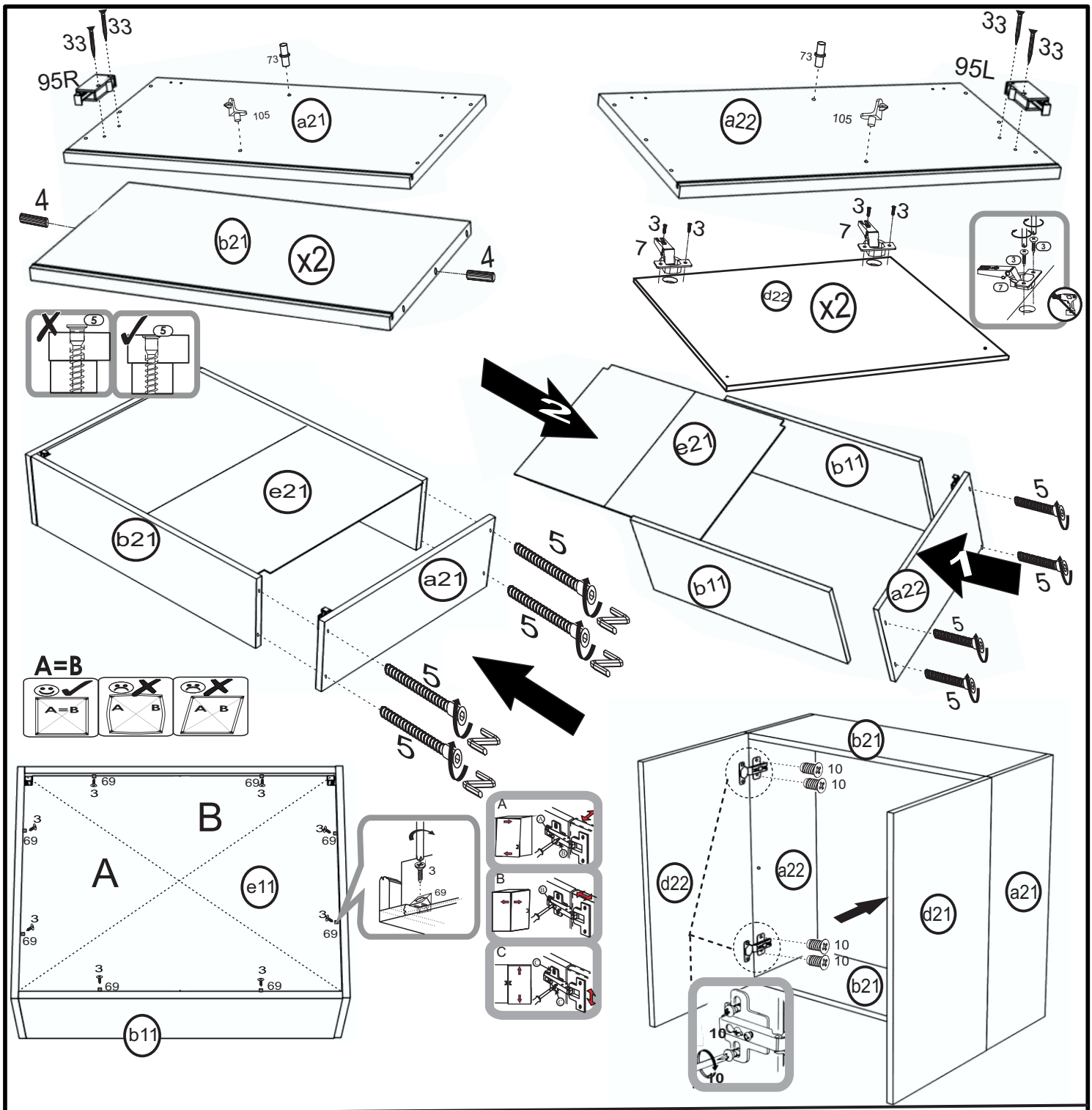
33
33
95R
73
105
a21
4
b21
x2
4
33
33
95L
73
105
a22
3
3
7
3
3
7
d22
x2
5
5
e21
b21
a21
5
5
5
5
e21
b11
b11
5
5
a22
5
5
A=B
A=B
A
B
A
B
69
3
e11
3
69
A
B
C
b11
b21
10
10
d22
a22
d21
a21
10
10
b21
10
10

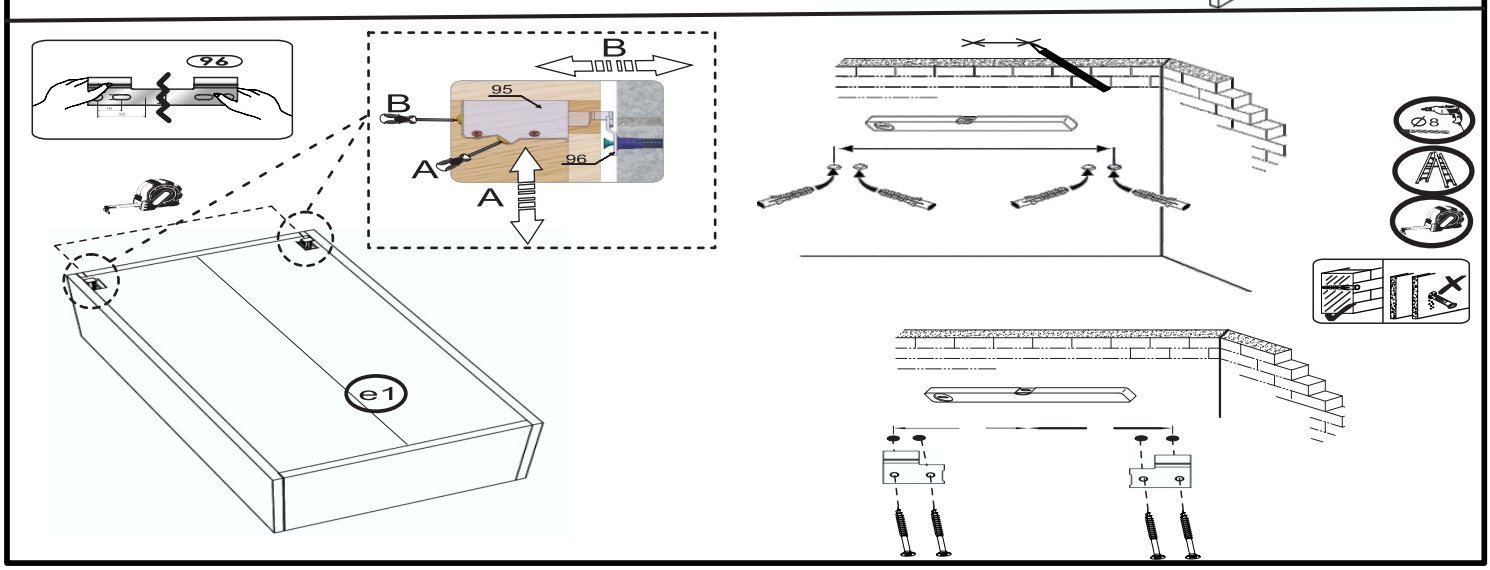
96
B
95
B
A
96
A
e1
Ø8