EASY - TYP 303

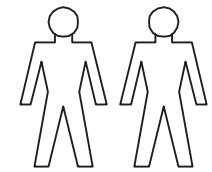

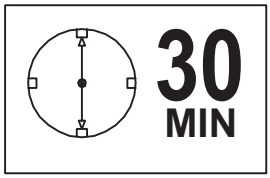

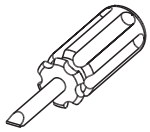

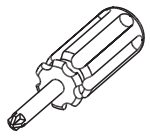

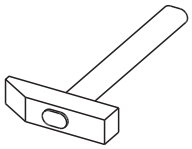

Ø8

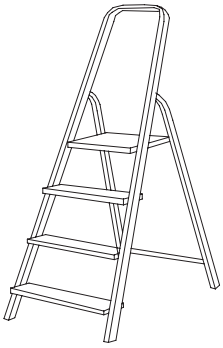

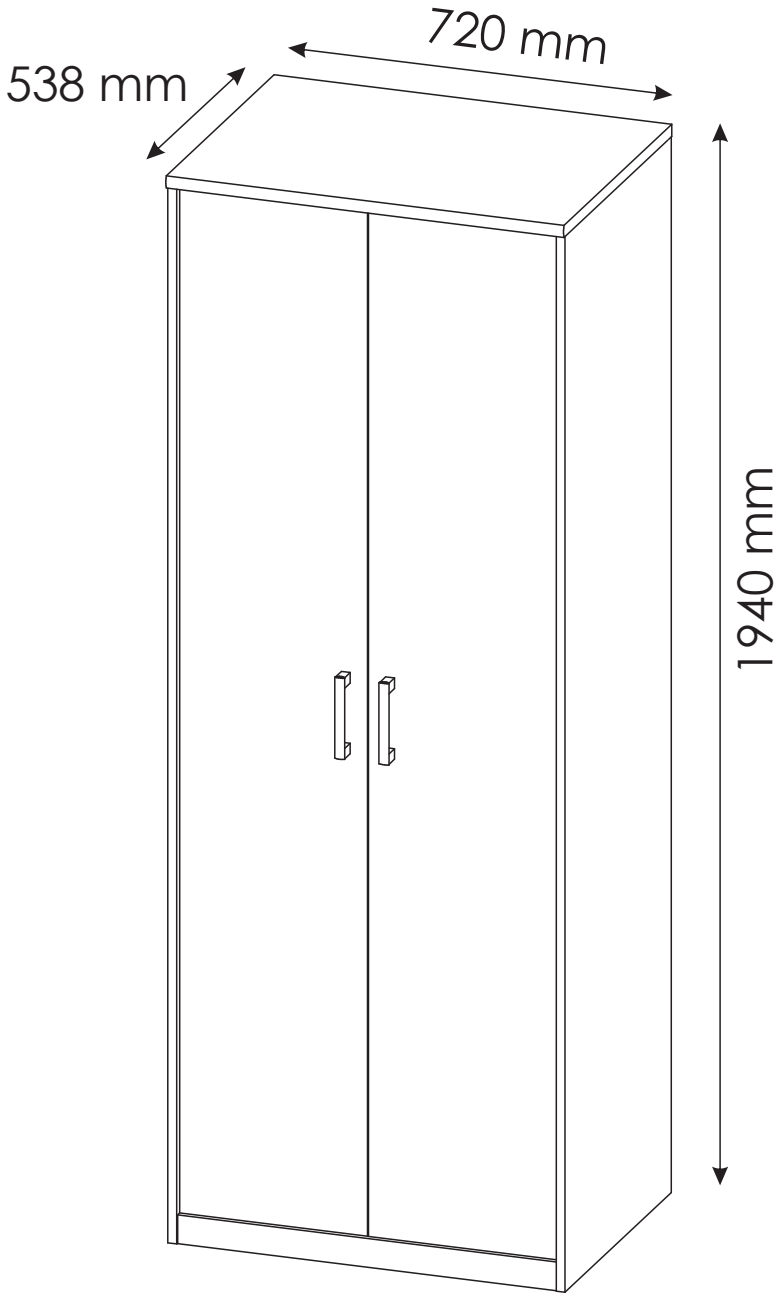

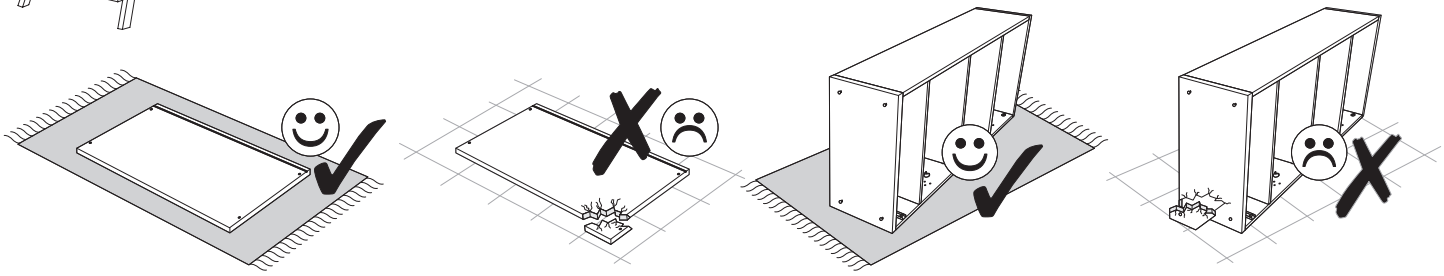

EASY - TYP 303

A0 8 x 30mm	x10	
C0	x4	
C2	x8	
C7 16mm	x8	
C10 6.3 x 20 mm	x4	
D0 3 x 15 mm	x16	
D5 3.5 x 16 mm	x12	
D10 4 x 16 mm	x16	
D16 4,2 x 28 mm	x4	
D21 5 x 13 mm	x1	
E0 5 x 50 mm / 8 x 50 mm	x1	
J4	x8	
J6		
L5	x2	
M1	x16	
O1	x2	
P0	x1	
P20	x4	
Q4	x2	
S0 L-679	x1	
T3	x6	
U0	x2	

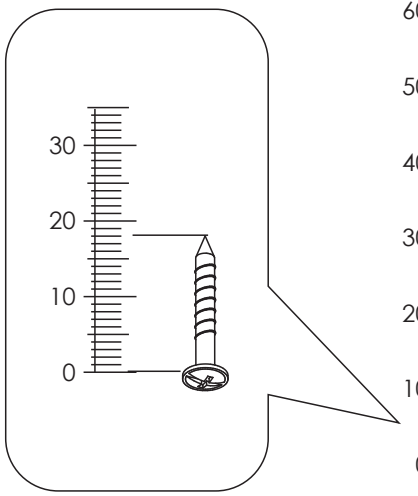

EASY - TYP 303

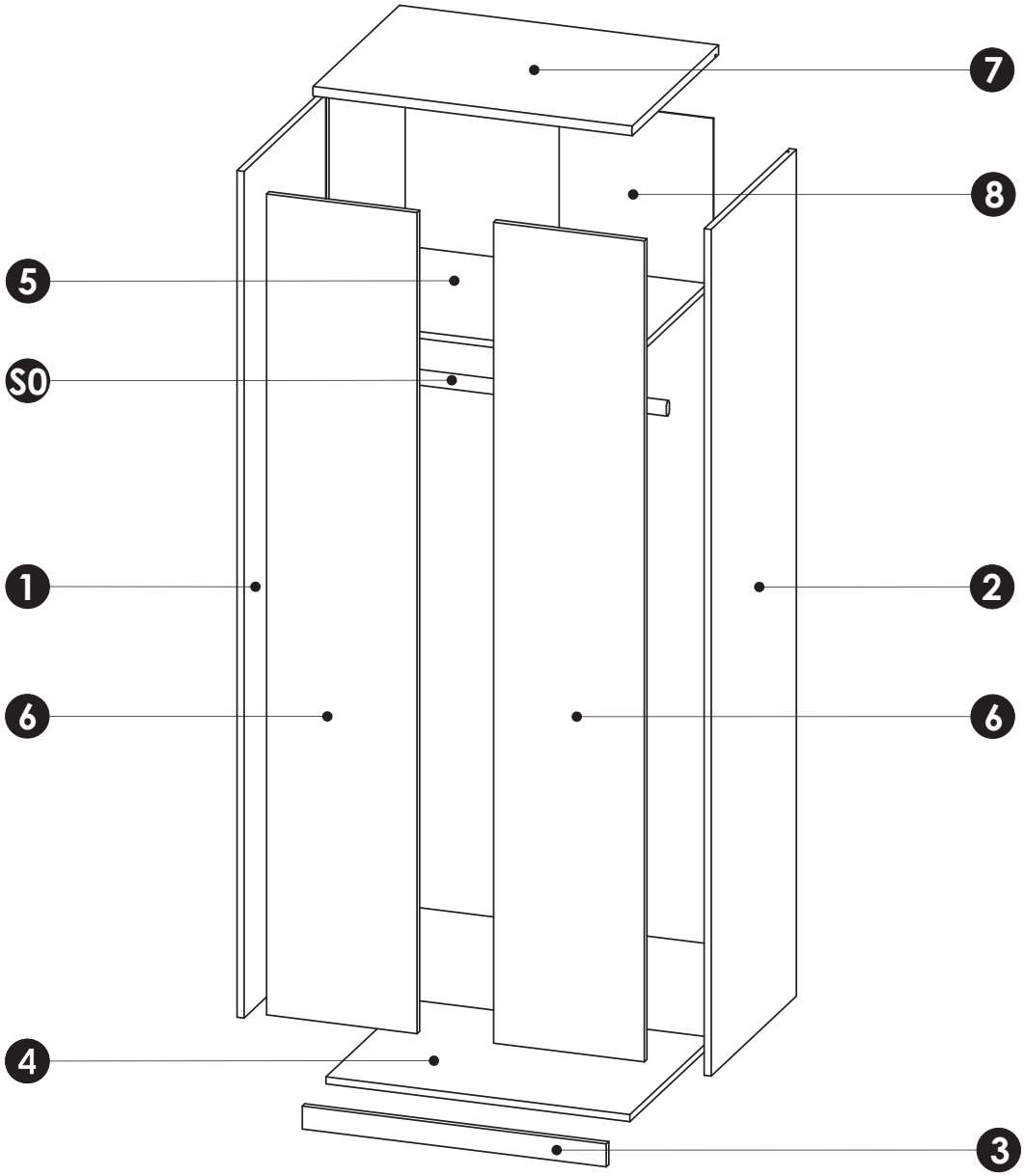

1	1912	528	16	x1	1/3
2	1912	528	16	x1	1/3
3	686	52	16	x1	3/3
4	686	510	16	x1	3/3
5	686	488	16	x1	3/3

6	1854	340	16	x2	2/3
7	720	538	22	x1	3/3
8	1860	696	2.8	x1	1/3
S0				x1	3/3
					3/3

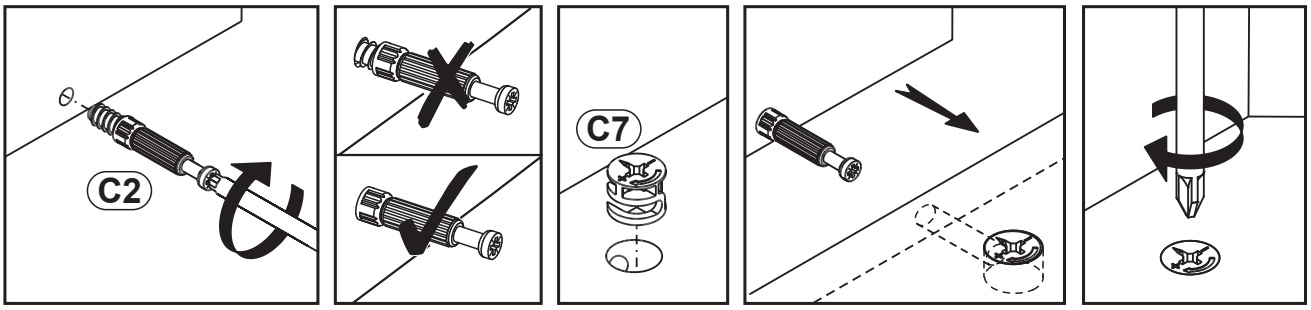

1

C2 x4	D21 5 x 13 mm x1	P0 x1
Q4 x2		

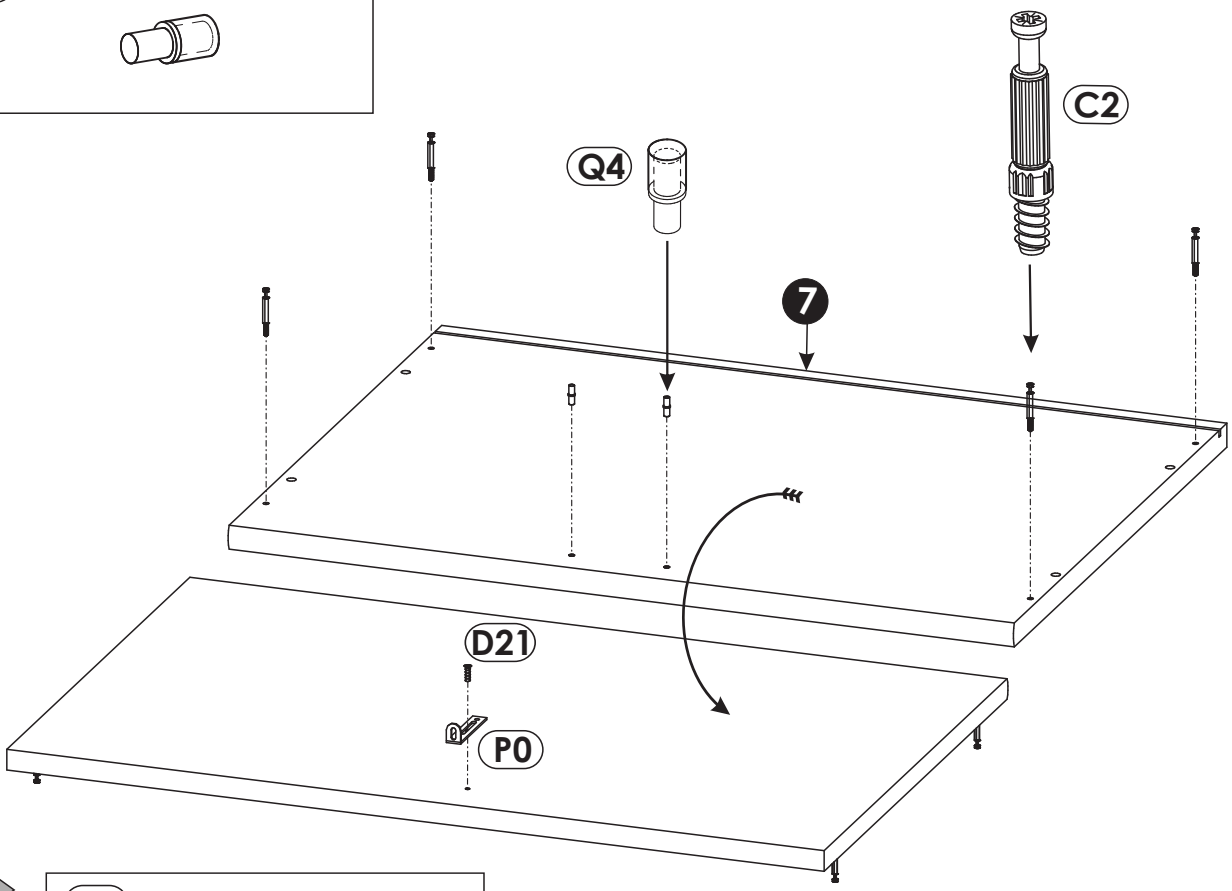

2

O1 x2

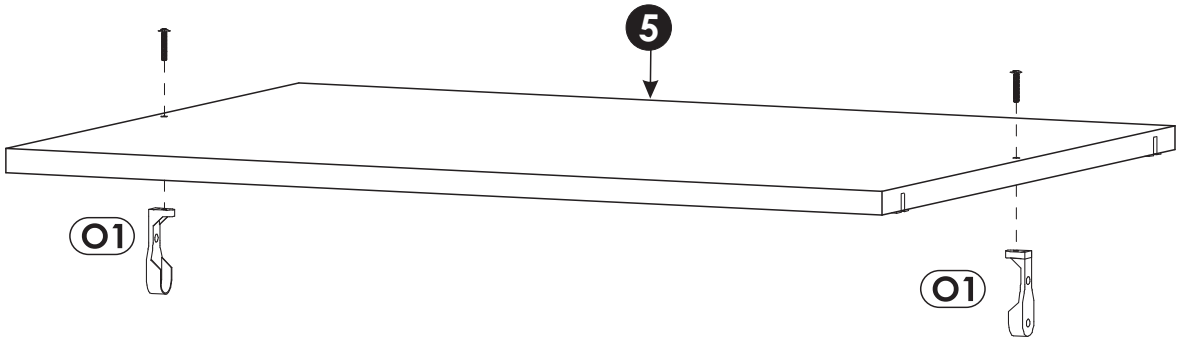

3

A0 8 x 30mm x4	C7 16mm x4

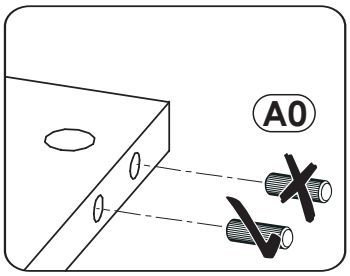

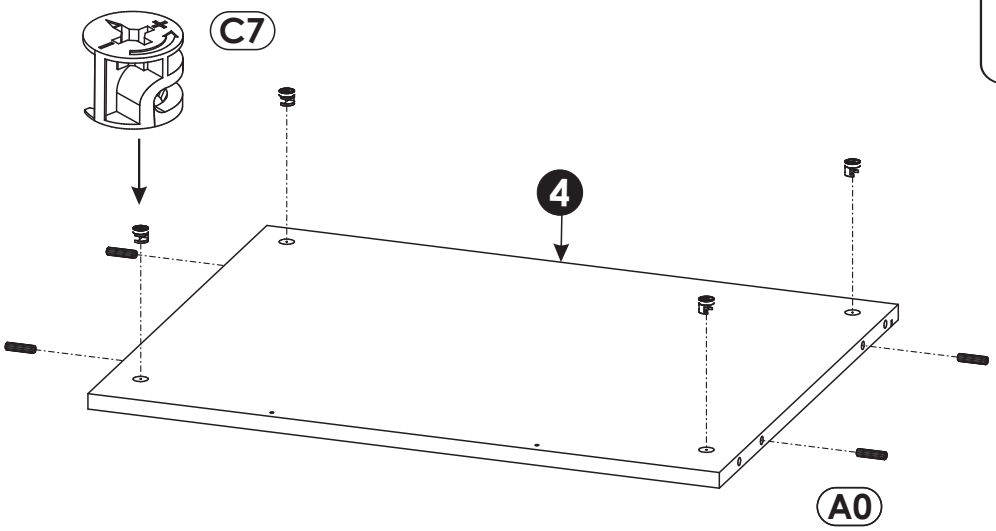

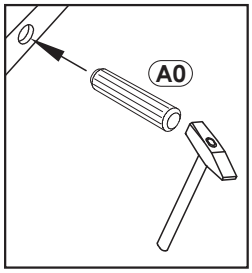

4

A0 8 x 30mm x2	D5 3.5 x 16 mm 4	P20 x4
T3 x2		

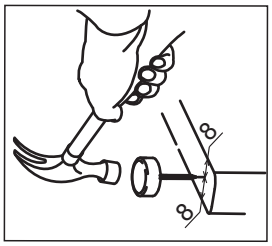

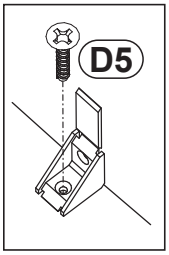

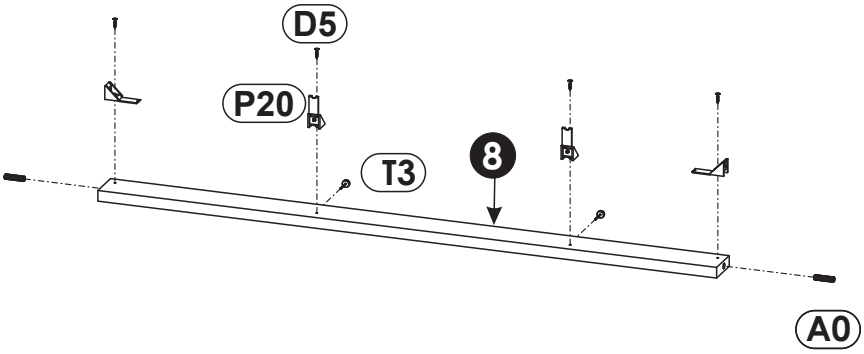

5

A0 8 x 30mm	x4	
C2	x4	
C7 16mm	x4	
C10 6.3 x 20 mm	x4	
J6	x8	
T3	x4	

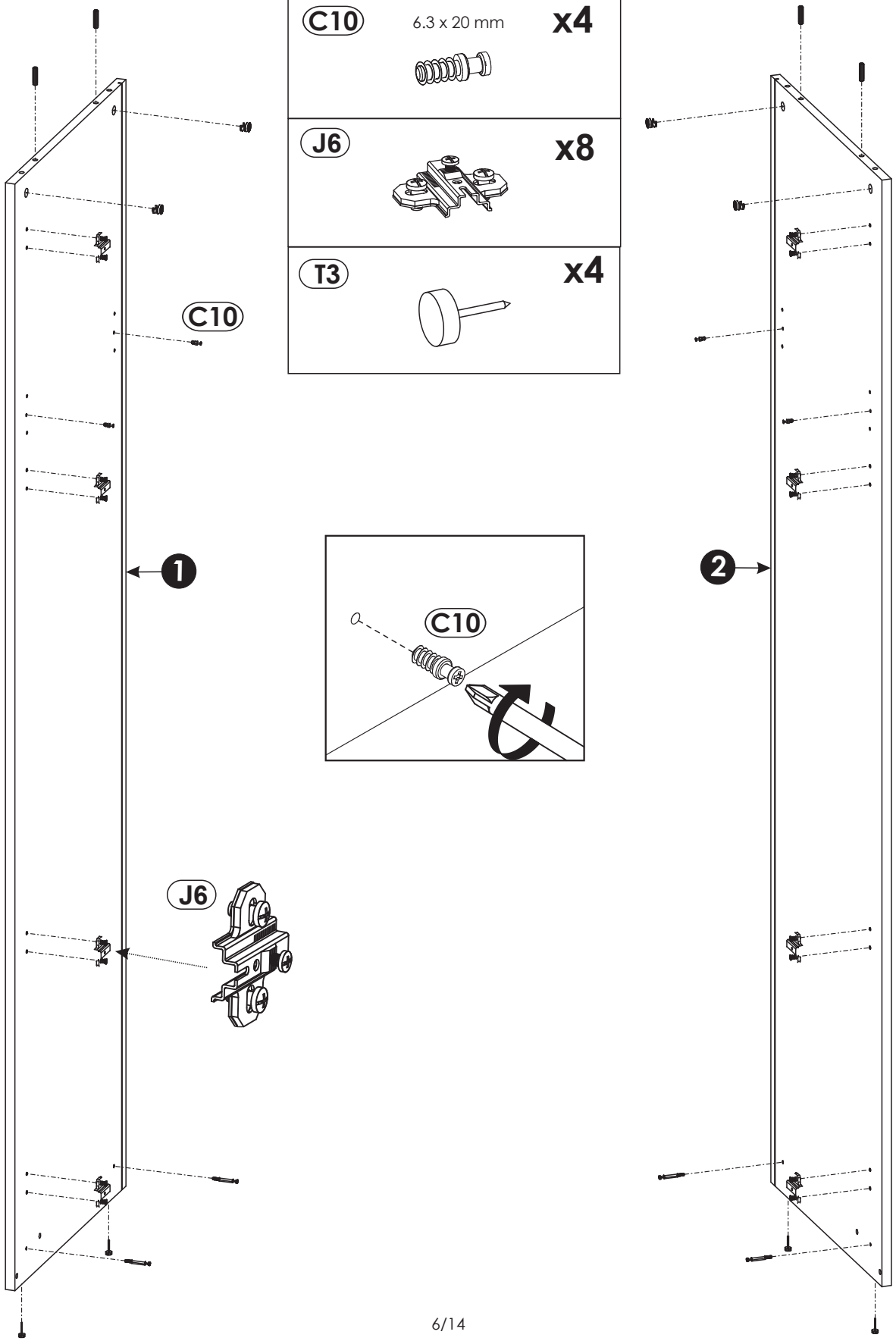

6

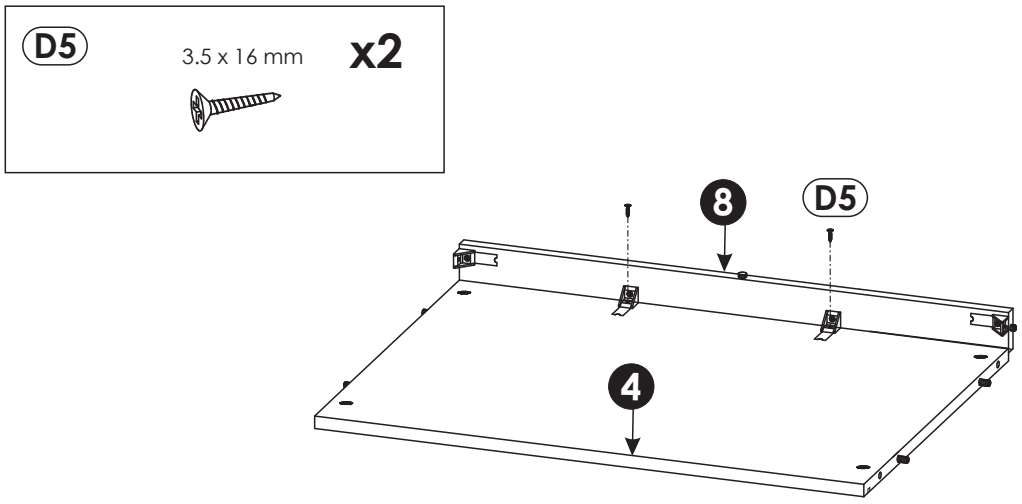

7

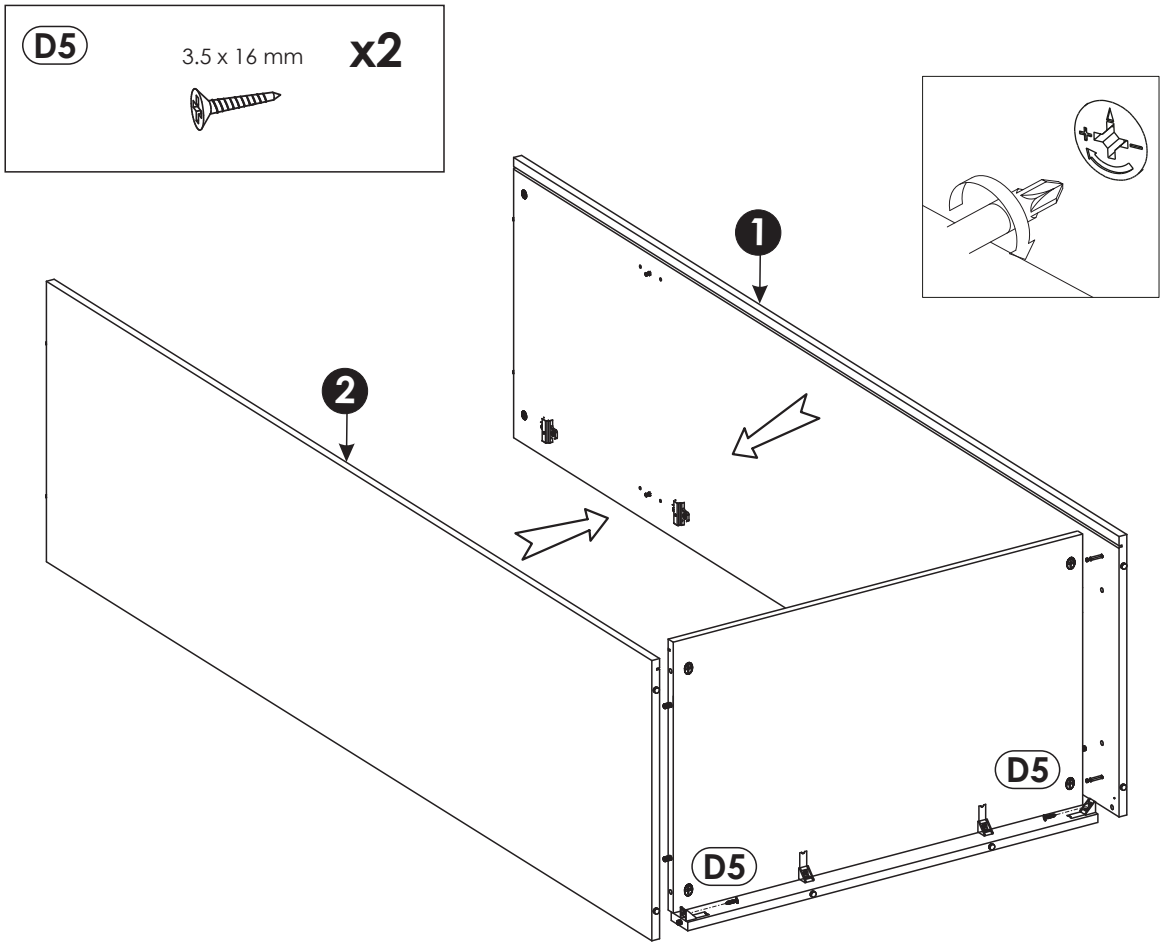

8

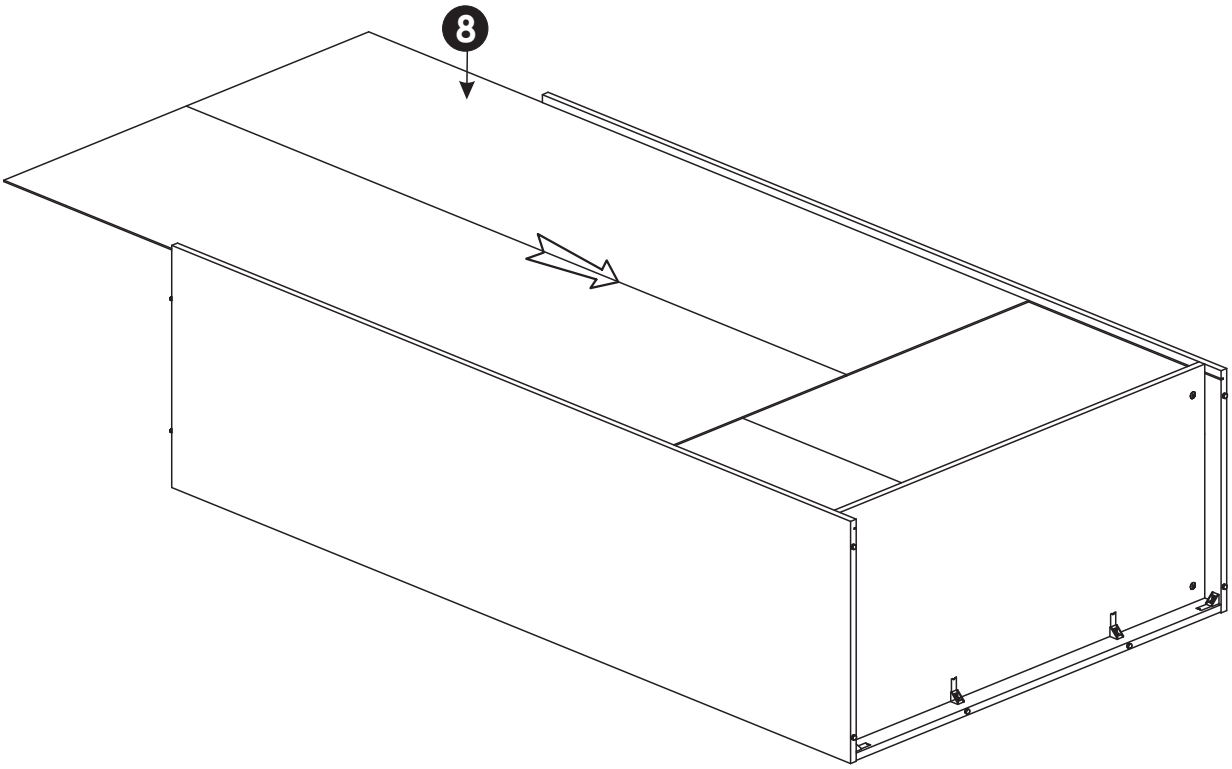

9

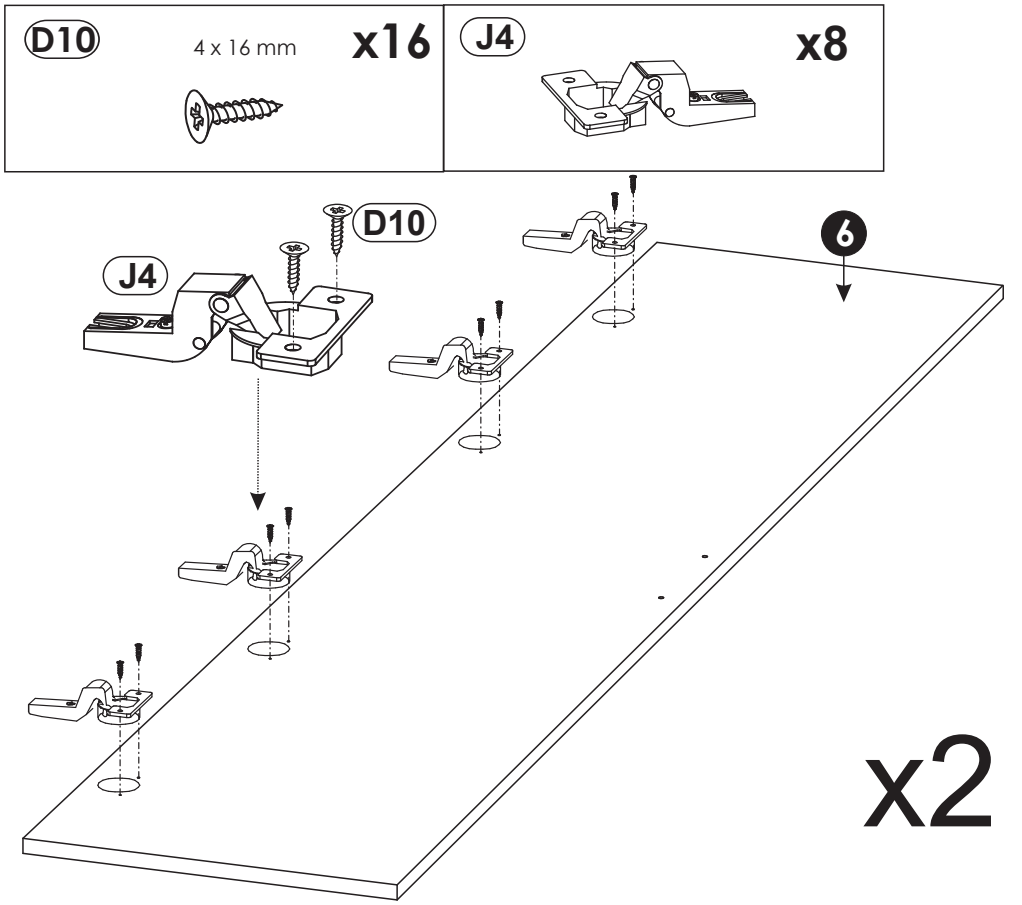

10

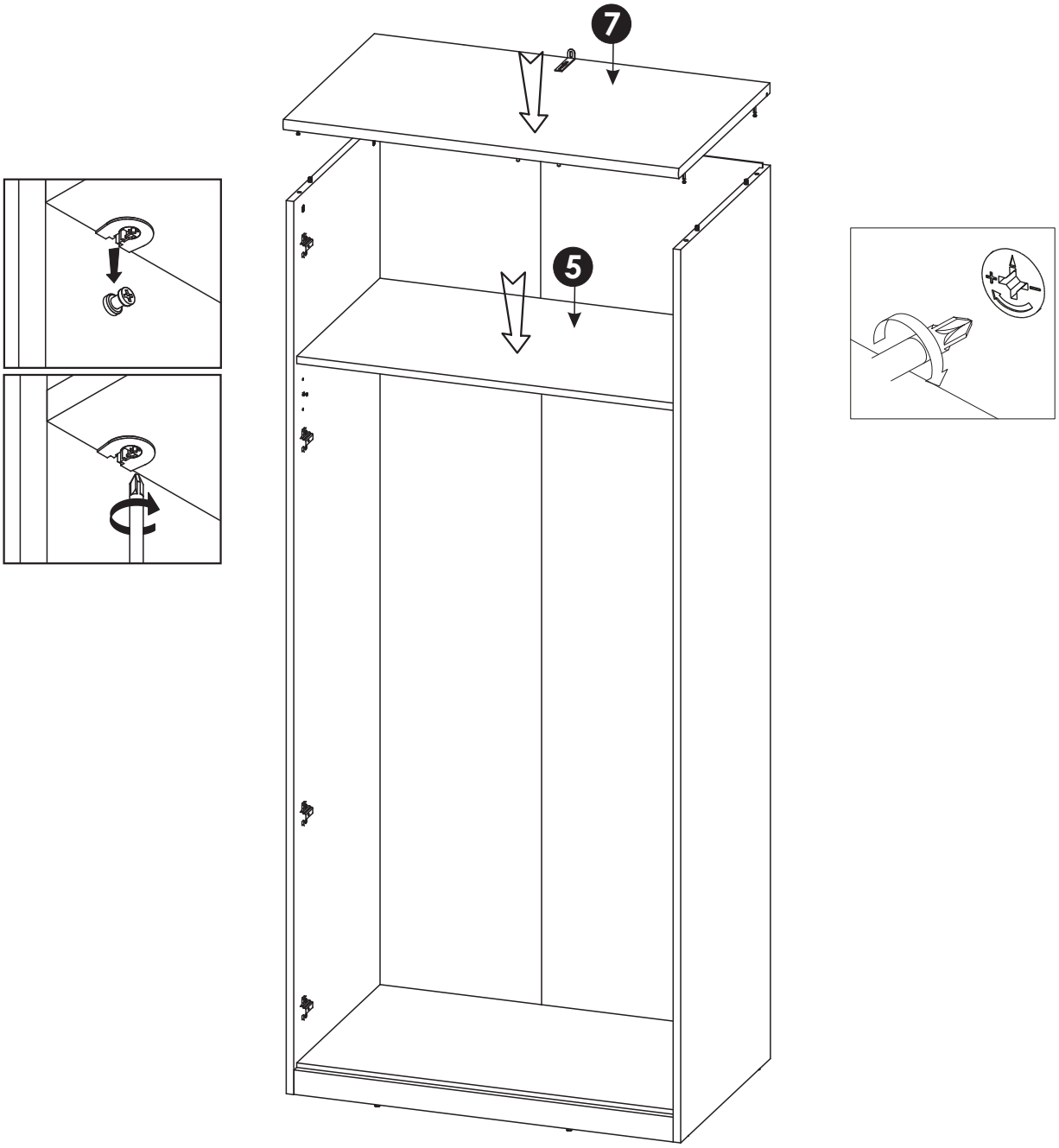

11

D0	M1
3 x 15 mm x16	x16

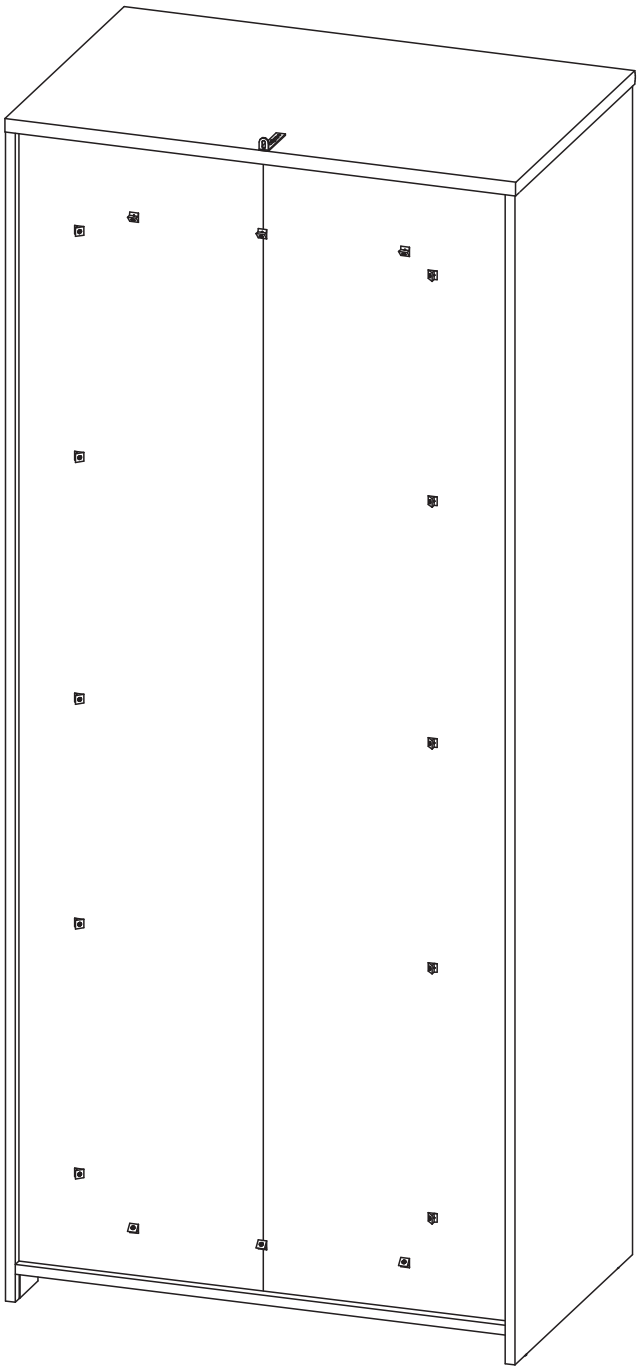

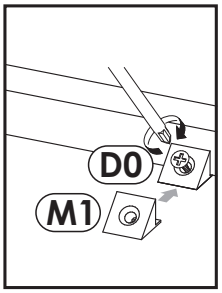

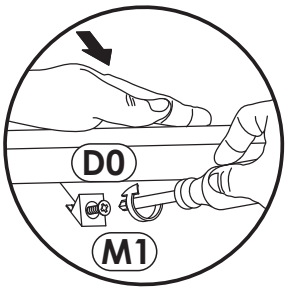

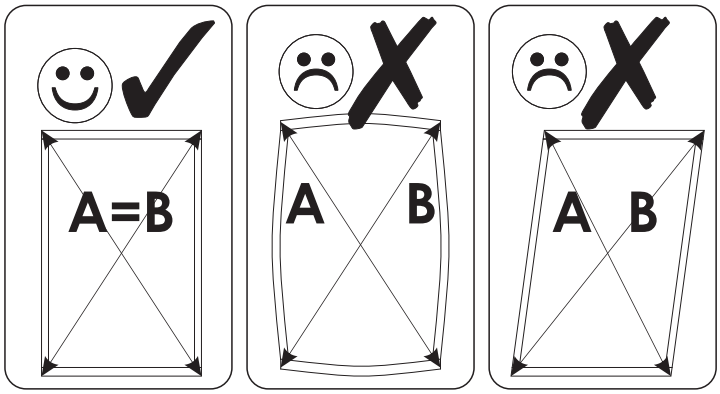

12

D5 3.5 x 16 mm x4	S0 L-679 x1

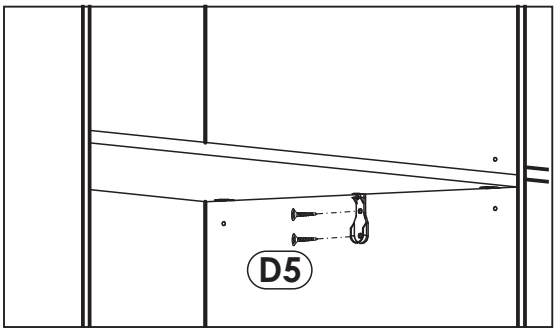

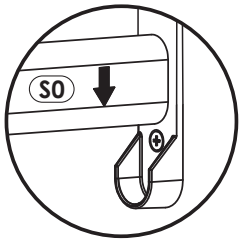

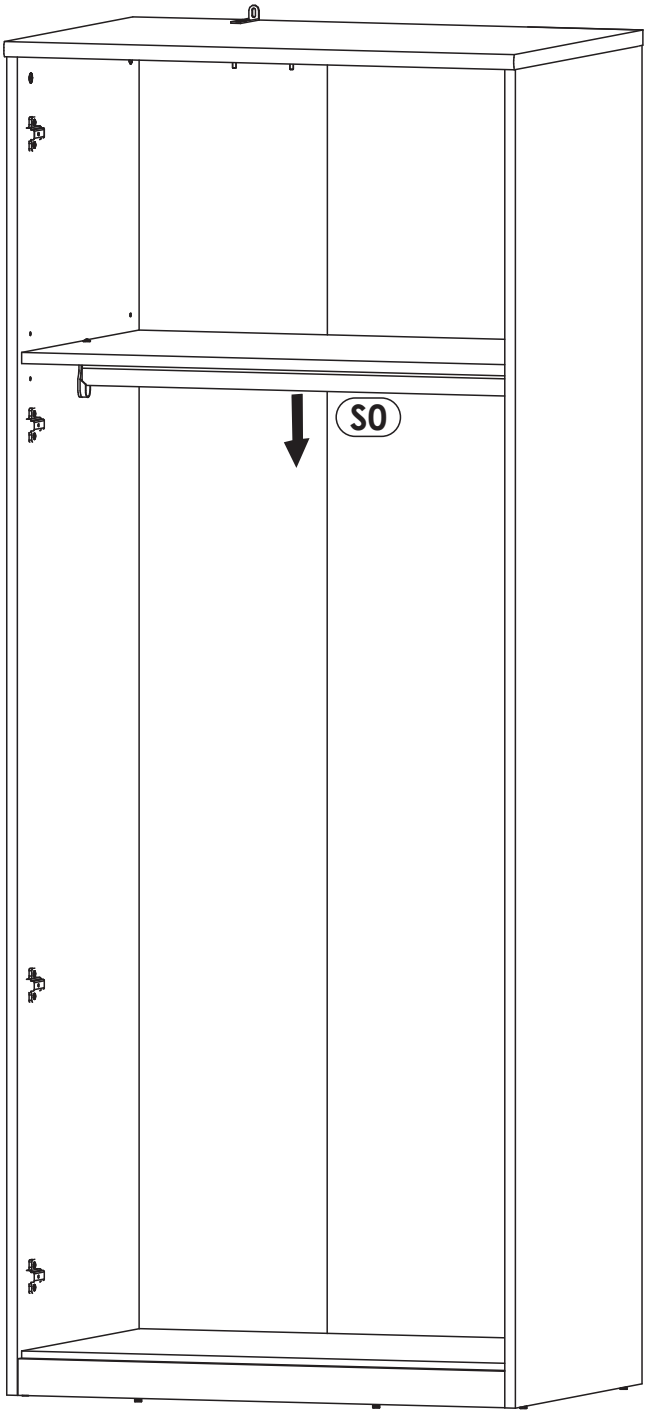

13

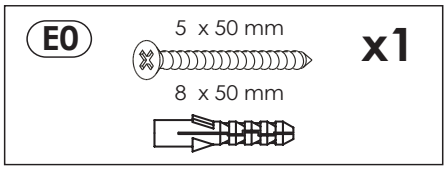

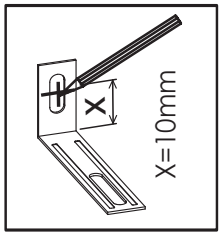

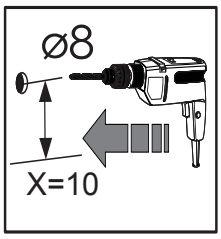

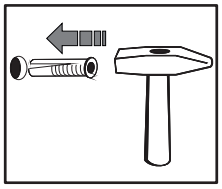

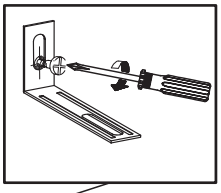

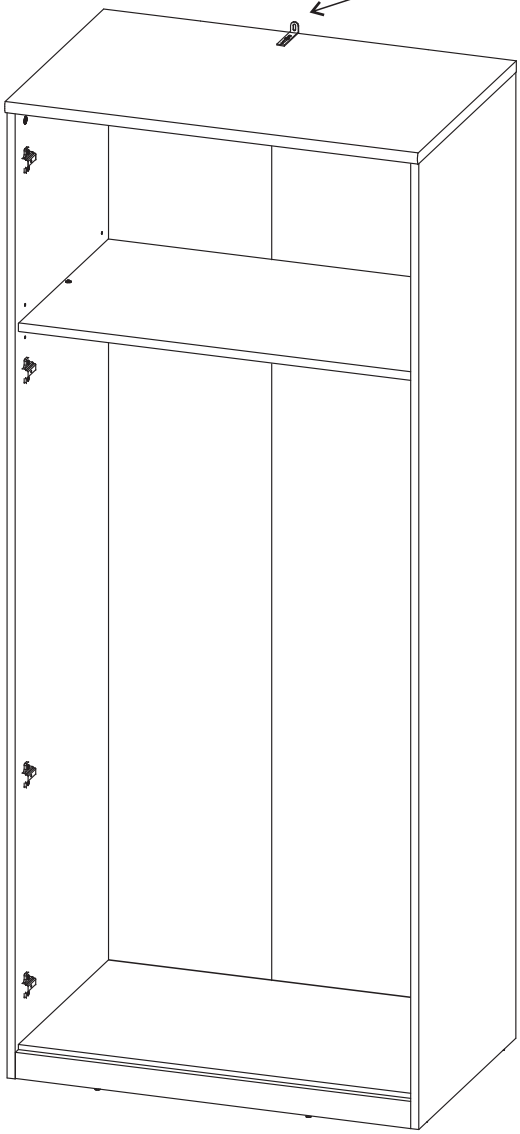

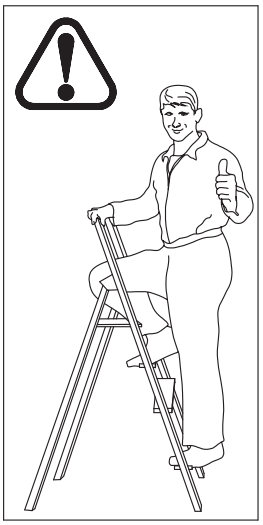

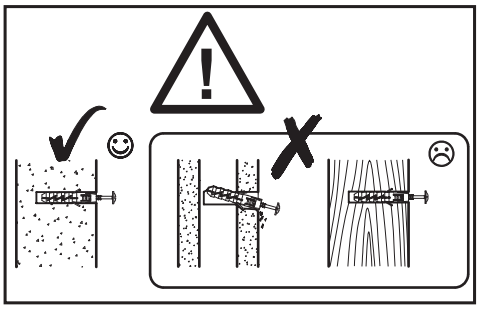

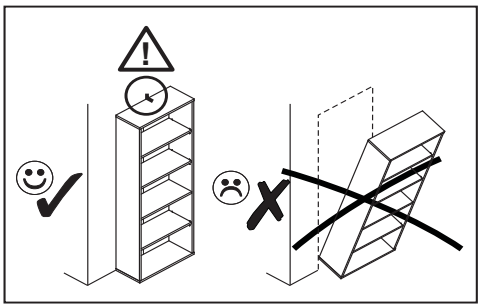

14

D16 4,2 x 28 mm 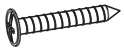 x4	L5 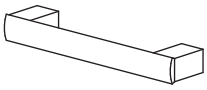 x2	U0 x2

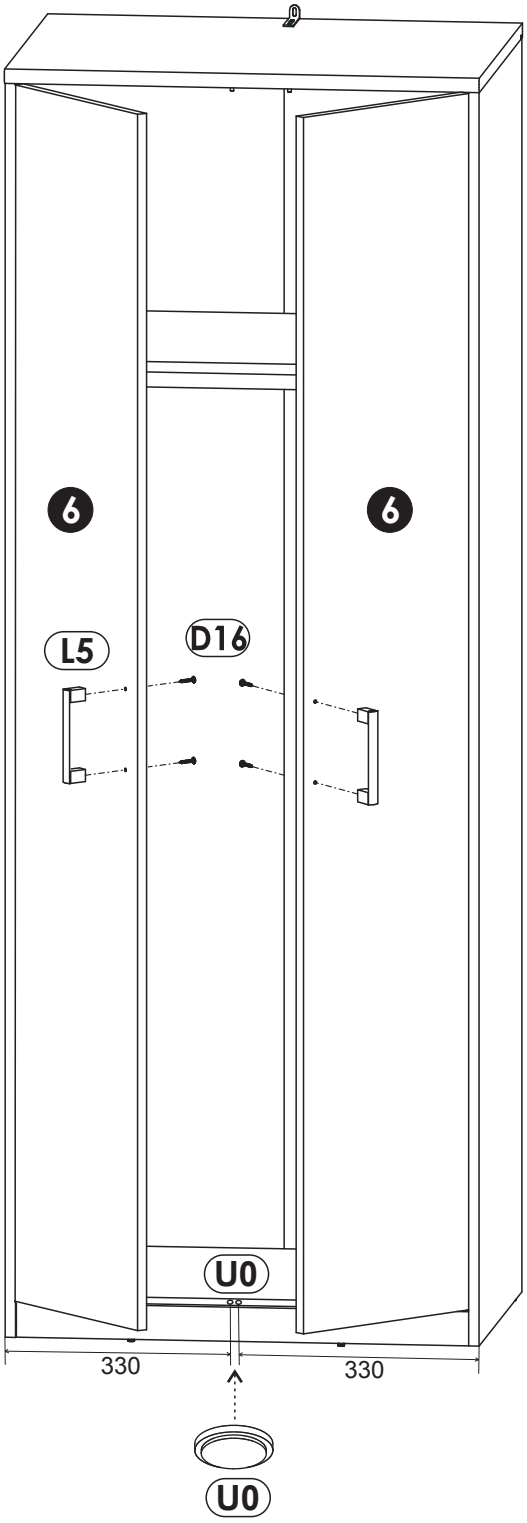

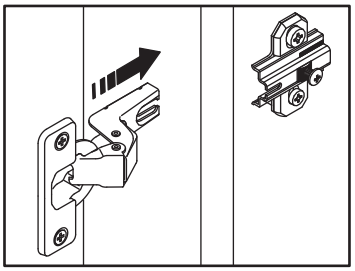

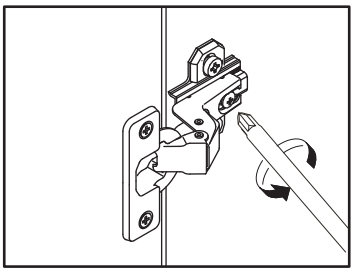
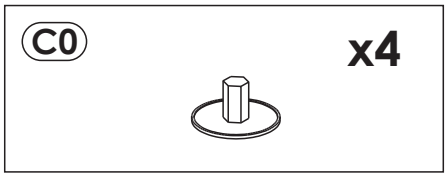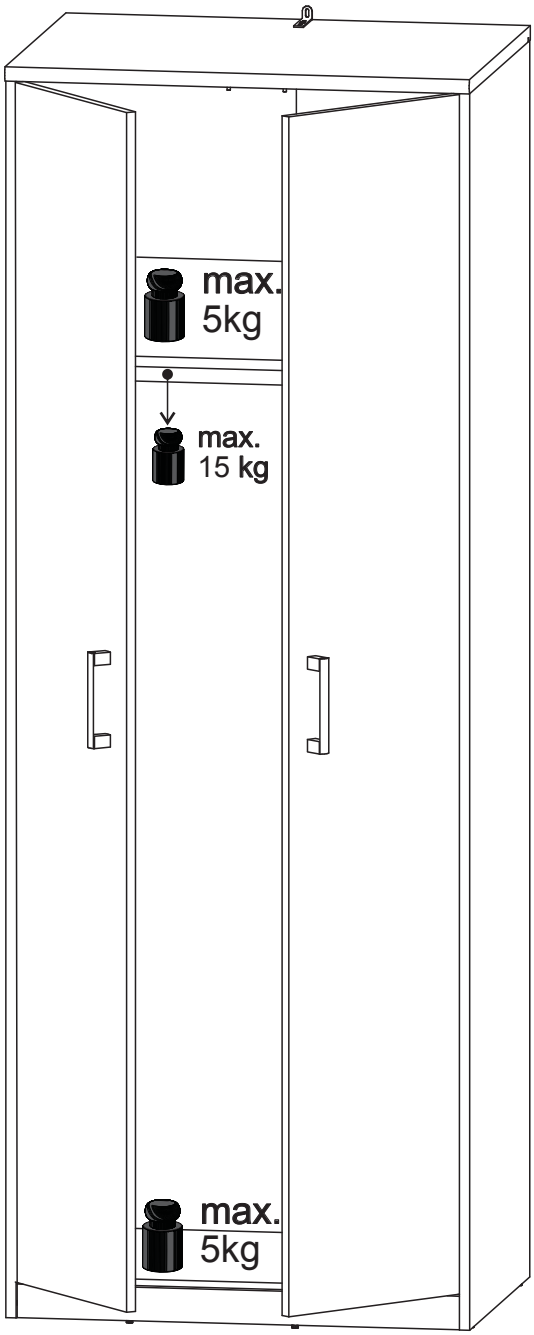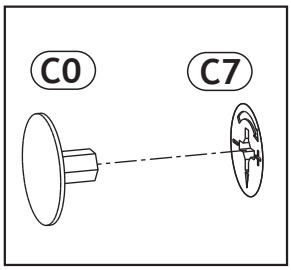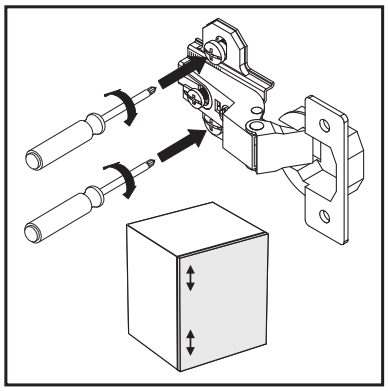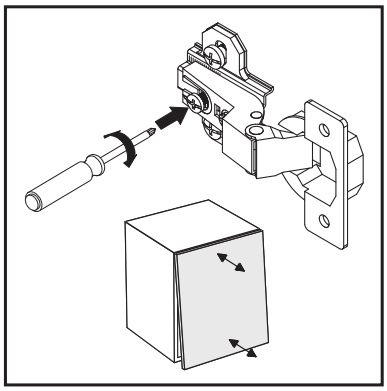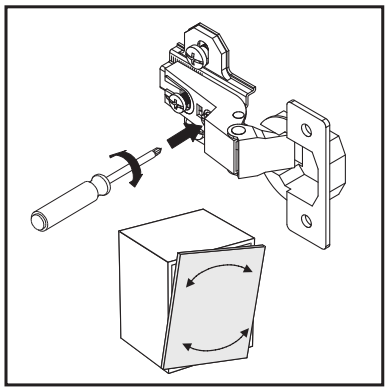
15