17390053/01

BDSK Handels GmbH & Co. KG
Mergentheimer Straße 59
DE-97084 Würzburg

CARRYHOME



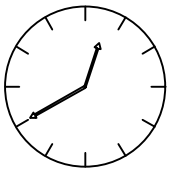

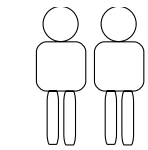

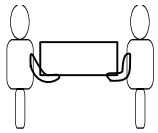

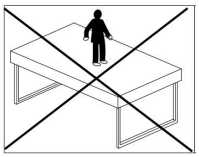

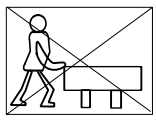





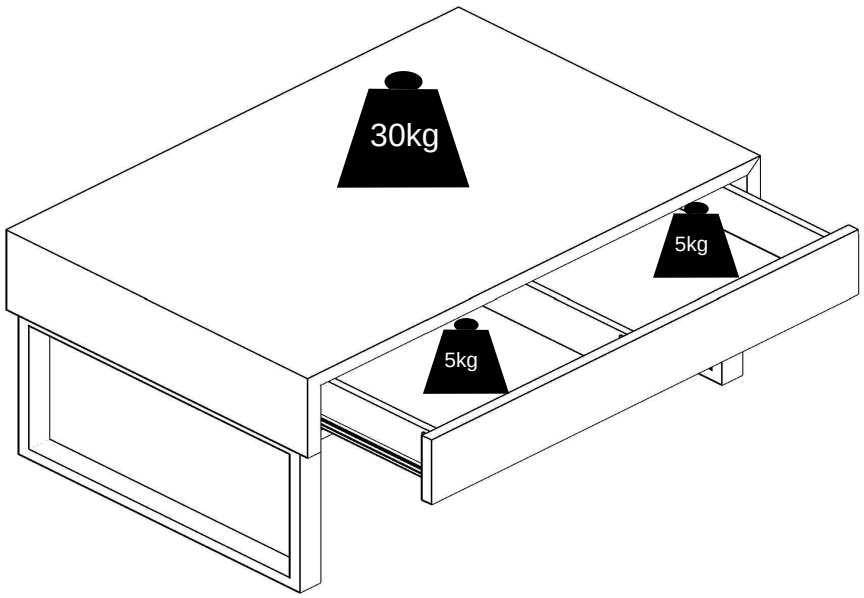

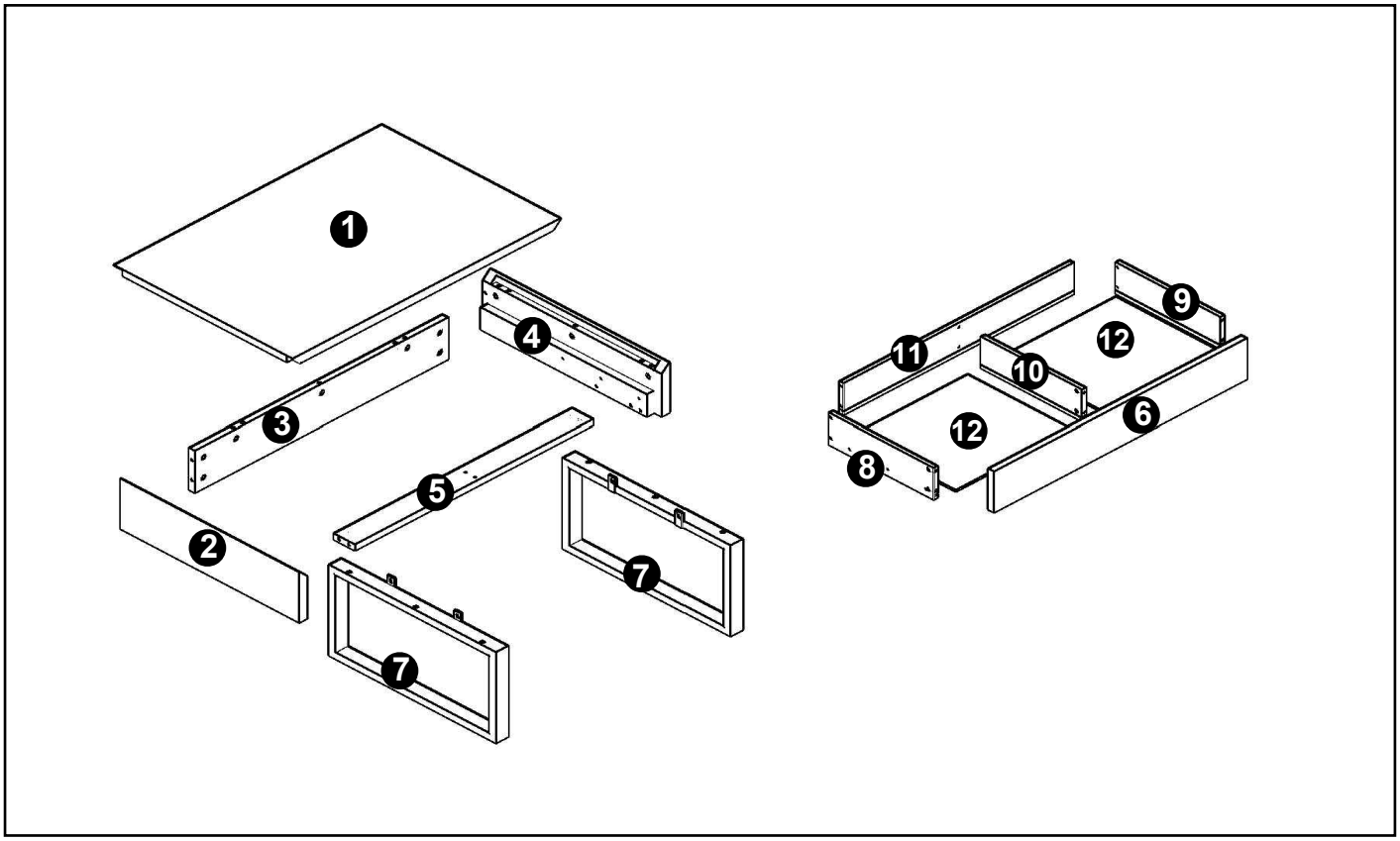

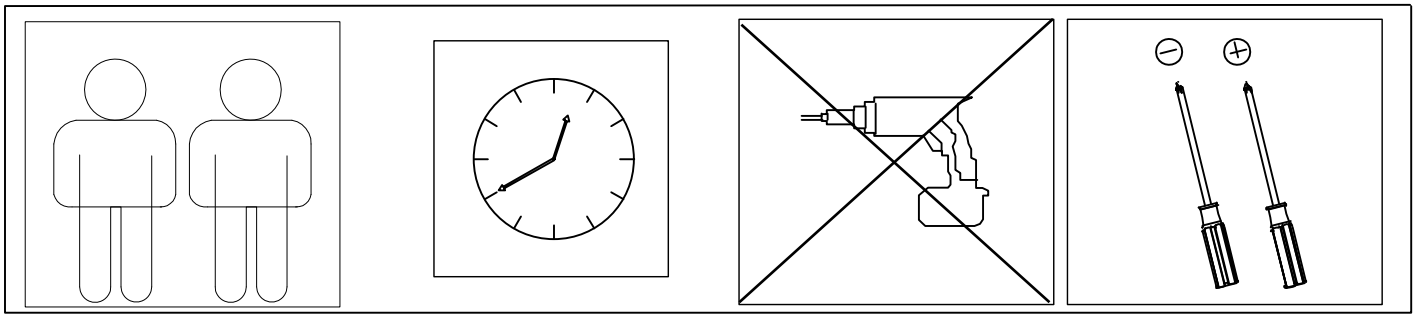



A	x8
Ø8x30mm	

B	x6
M4.2*25mm	

C	x2
	

D	x15
	
Ø15x12mm	

E	x15
	
Ø6x35mm	

F	x4
	
M6x20mm	

G	x6
	
M6x35mm	

H	x1
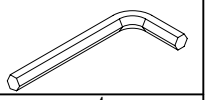	
M4	

I	x14
	
Ø3.5x12mm	

J	x1
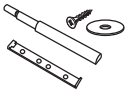	

K	x6
	
Ø10x9mm	

L	x6
Ø6x25mm	

M	x10
	
M6*18mm	

N	x2
	
Ø20	

1

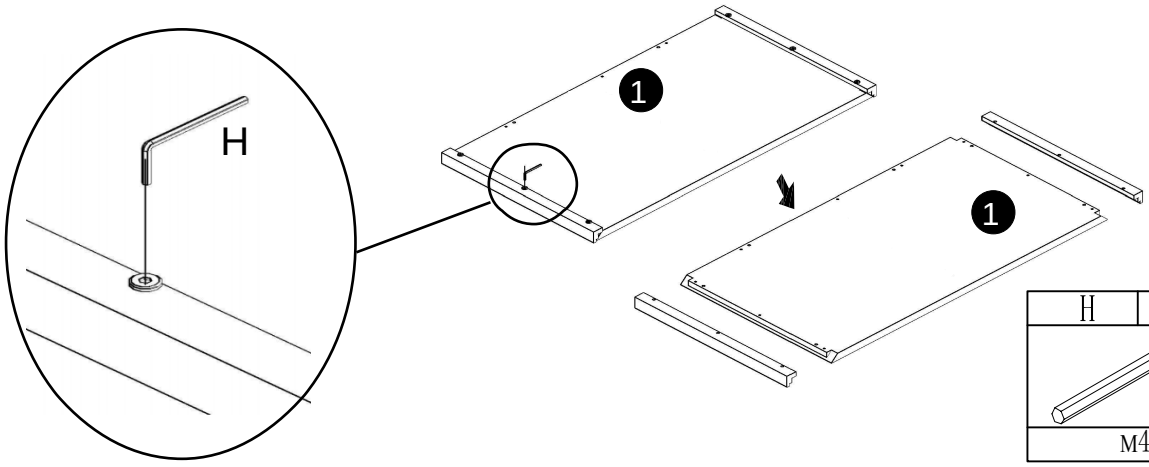

H	x1
M4	

2

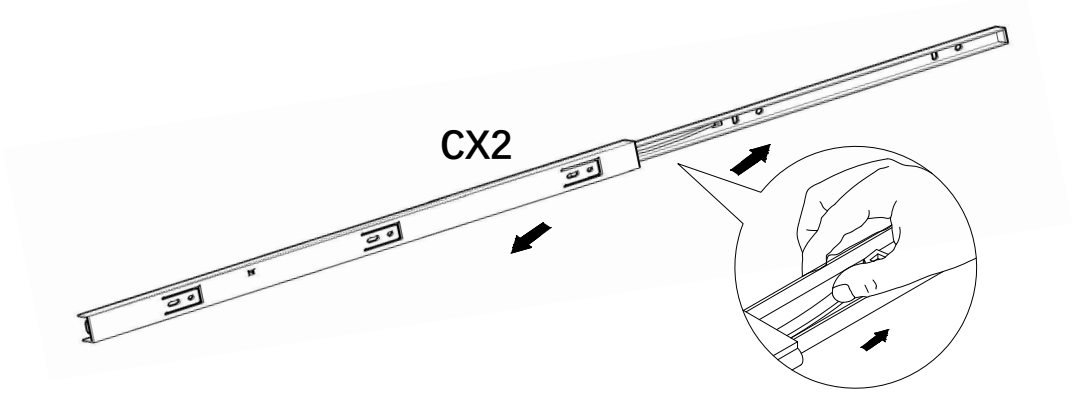

C	x2

3

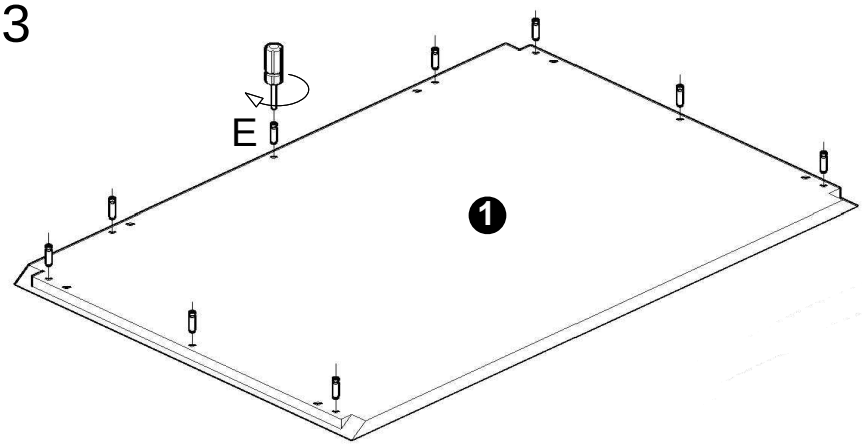

E	x9
Ø6x35mm	

4

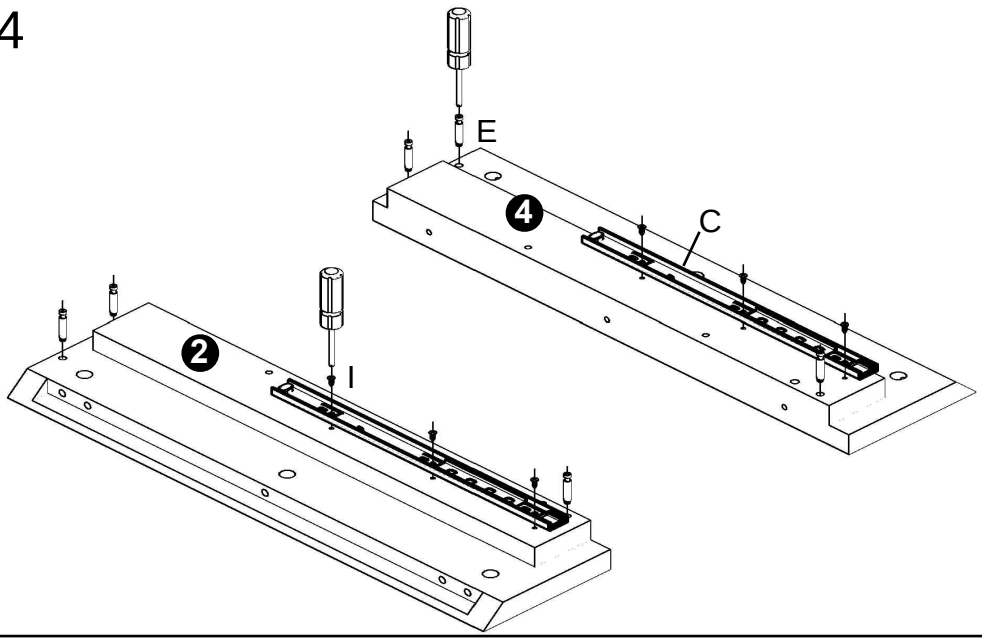

C	x2

E	x6
Ø6x35mm	

I	x6
Ø3.5x12mm	

5

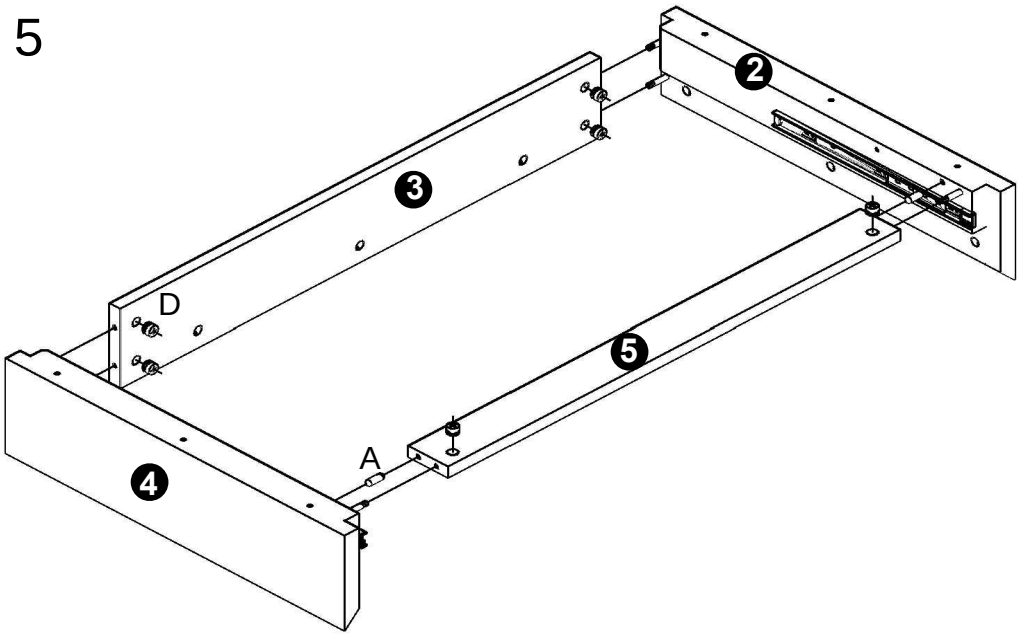

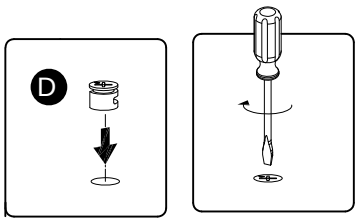

D	x6
Ø15x12mm	

A	x2
Ø8x30mm	

6

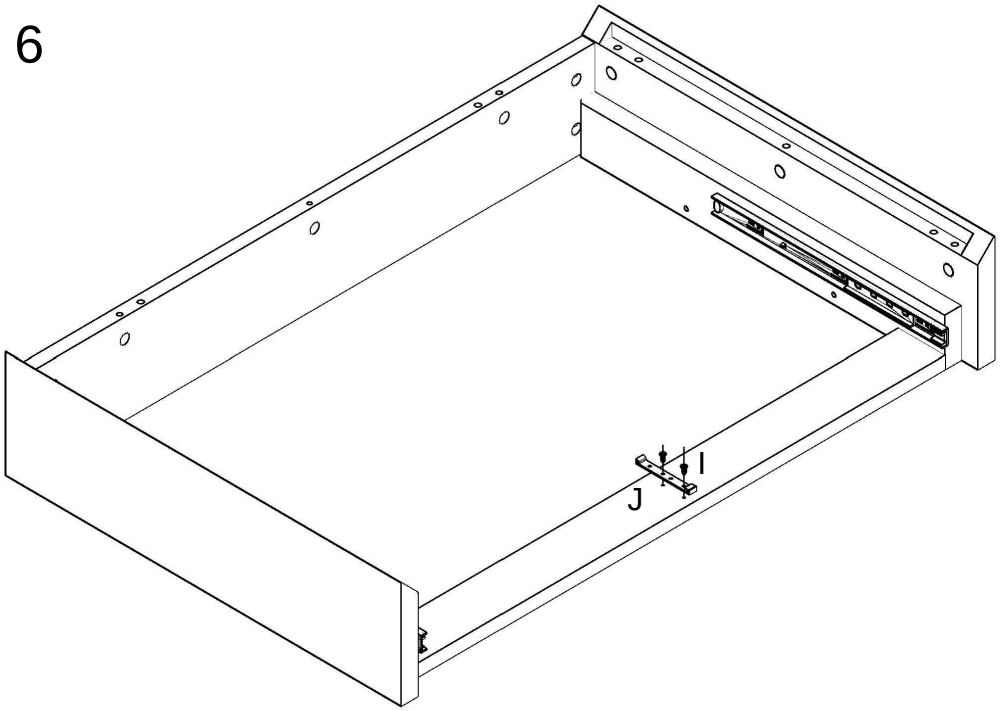

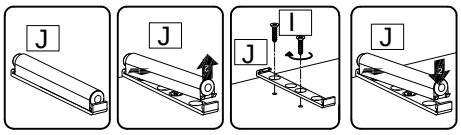

I	x2
Ø3.5x12mm	

J	x1

7

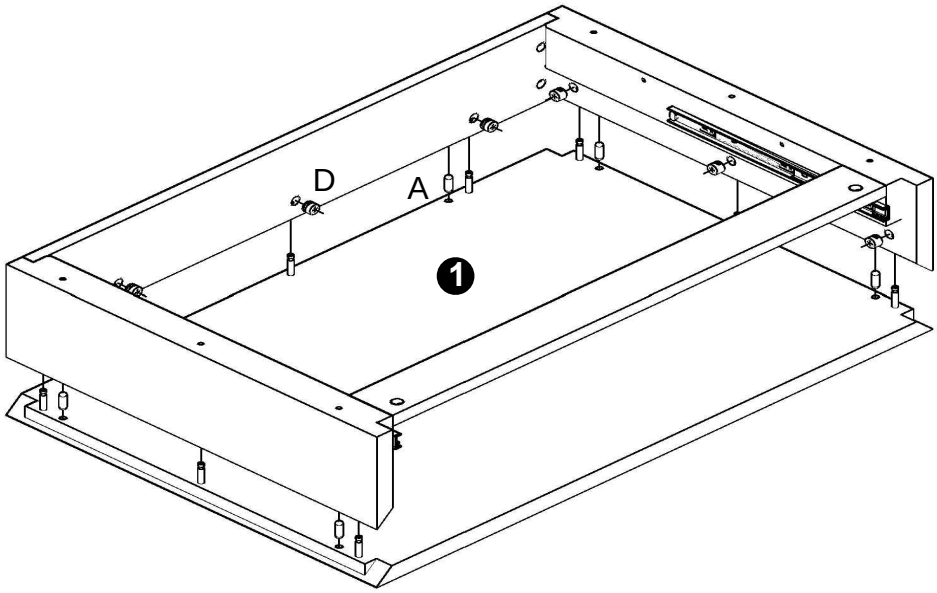

D	x9
Ø15x12mm	

A	x6
Ø8x30mm	

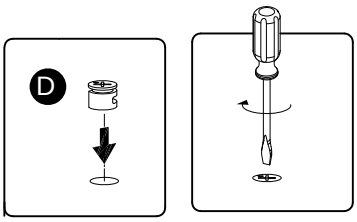

8

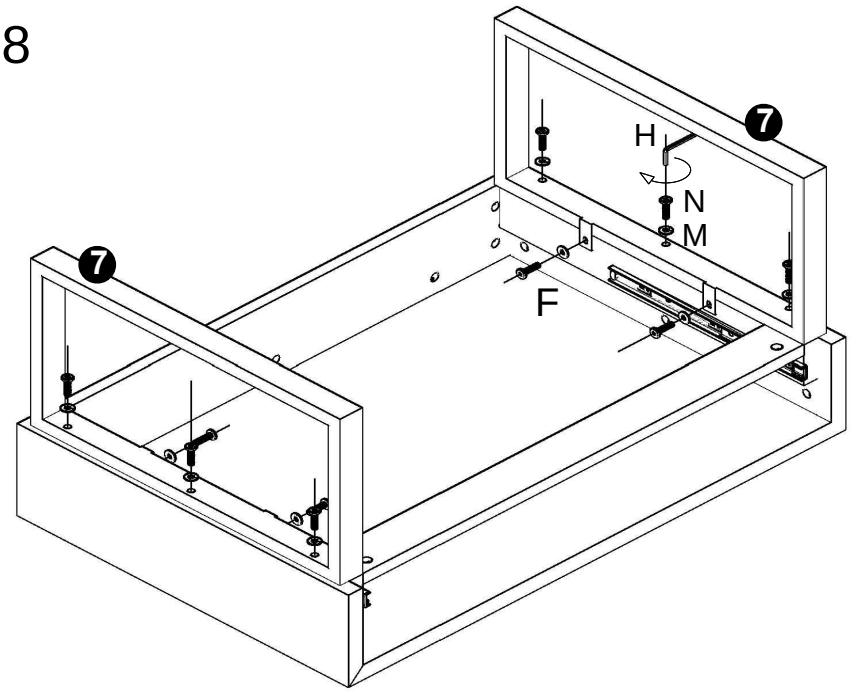

F	x4
	
M6x20㎜	

H	x1
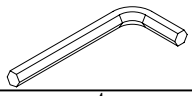	
M4	

M	x10
	
M6*18mm	

G	x6
	
M6x35㎜	

9

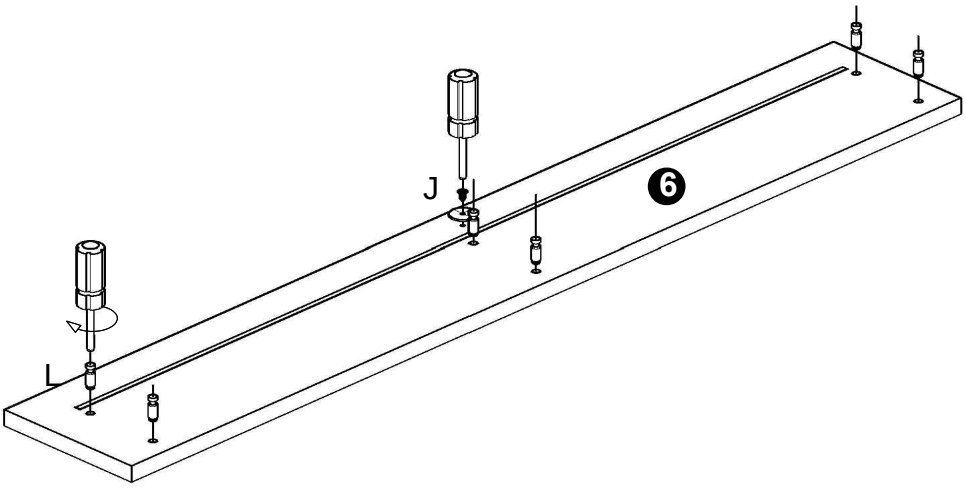

J	x1
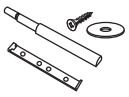	

L	x6
	
Ø6x25㎜	

10

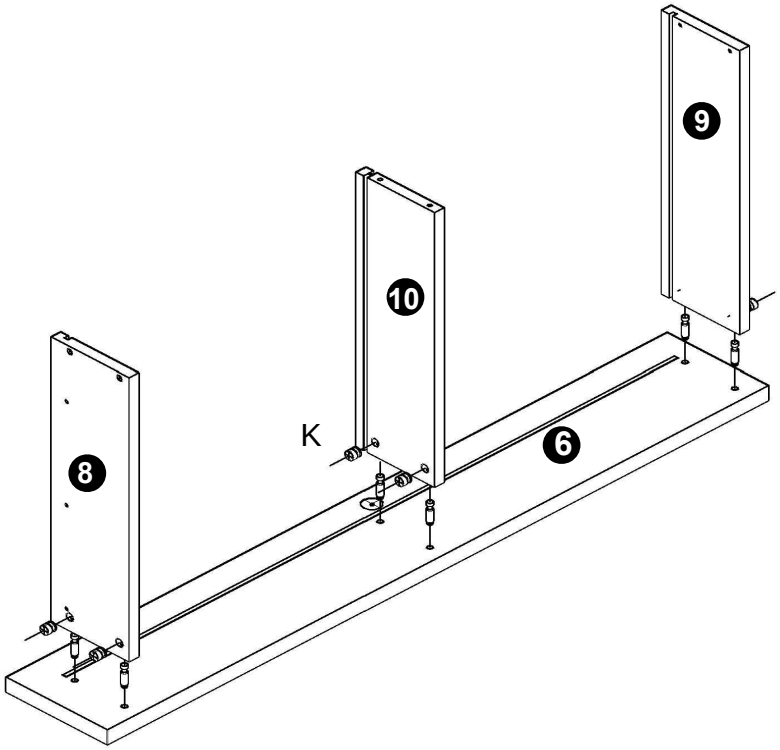

K	x6
	
Ø10x9㎜	

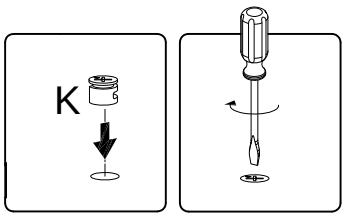

11

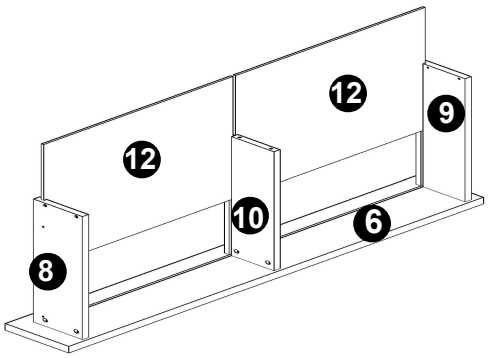

12

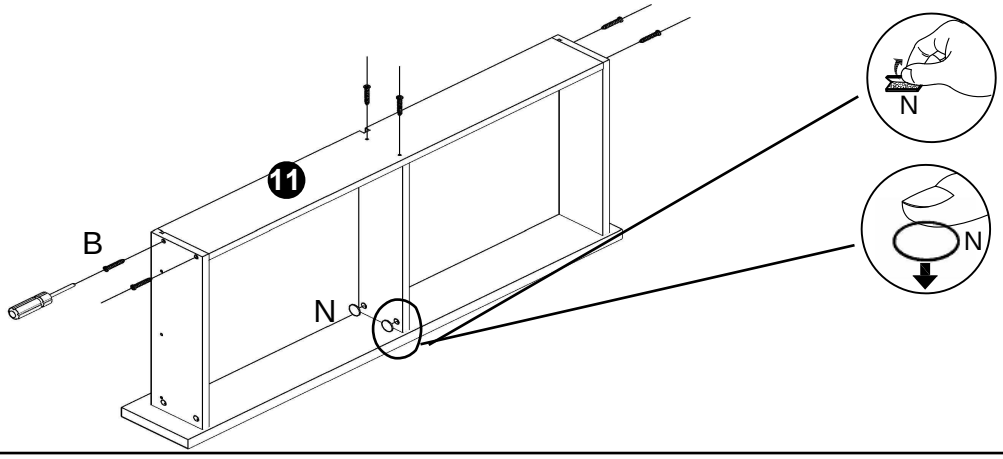

B	x6
M4.2*25mm	

N	x2
Ø20	

13

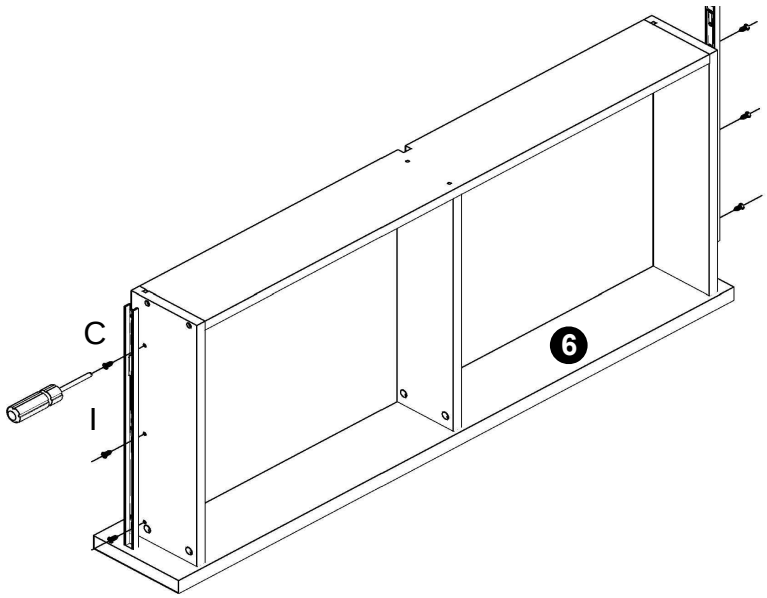

C	x2

I	x6
Ø3.5x12mm	

14

