Assembly Instructions
BRIGHTON COMPACT CHAIR

Leg		Front Apron		Back Apron		Backrest		Seat		Bolt - M6*43		Allen Key		
A	2 pcs	B	1 pc	C	1 pc	D	1 pc	E	1 pc	F	8 pcs	G	1 pc	

1

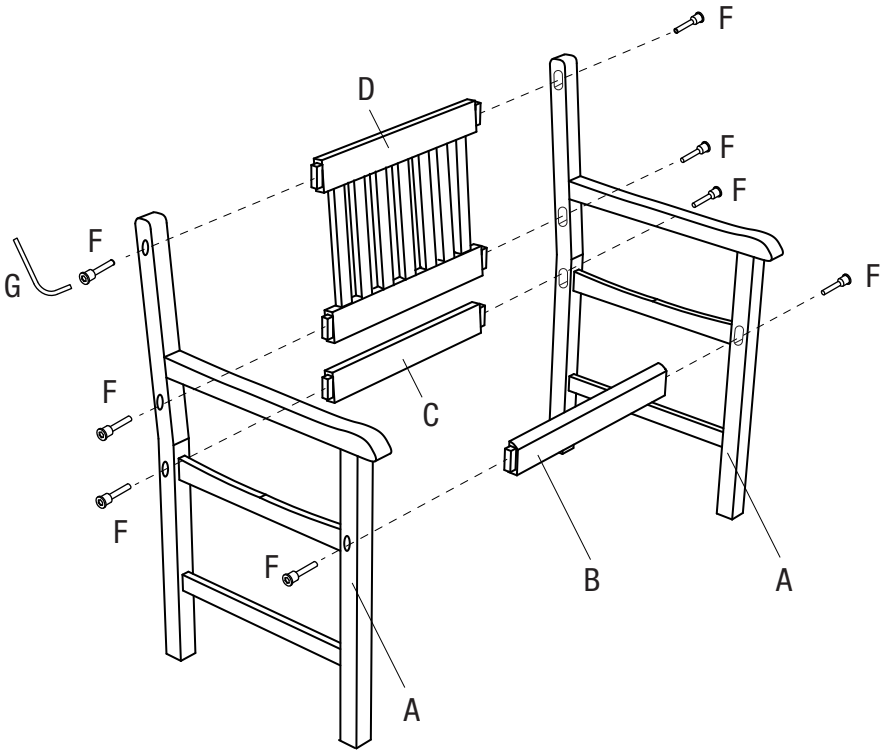

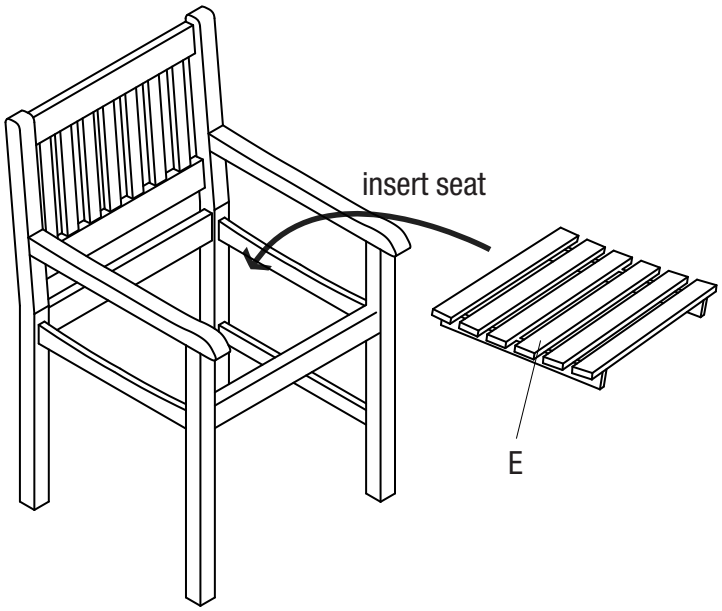

3

