Couchtisch
CAMRON/LAUREY/BENTON

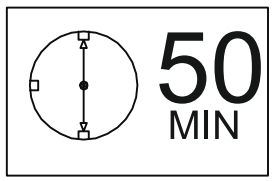

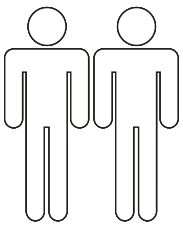

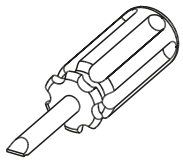

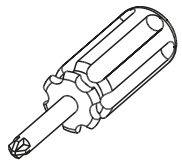

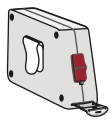

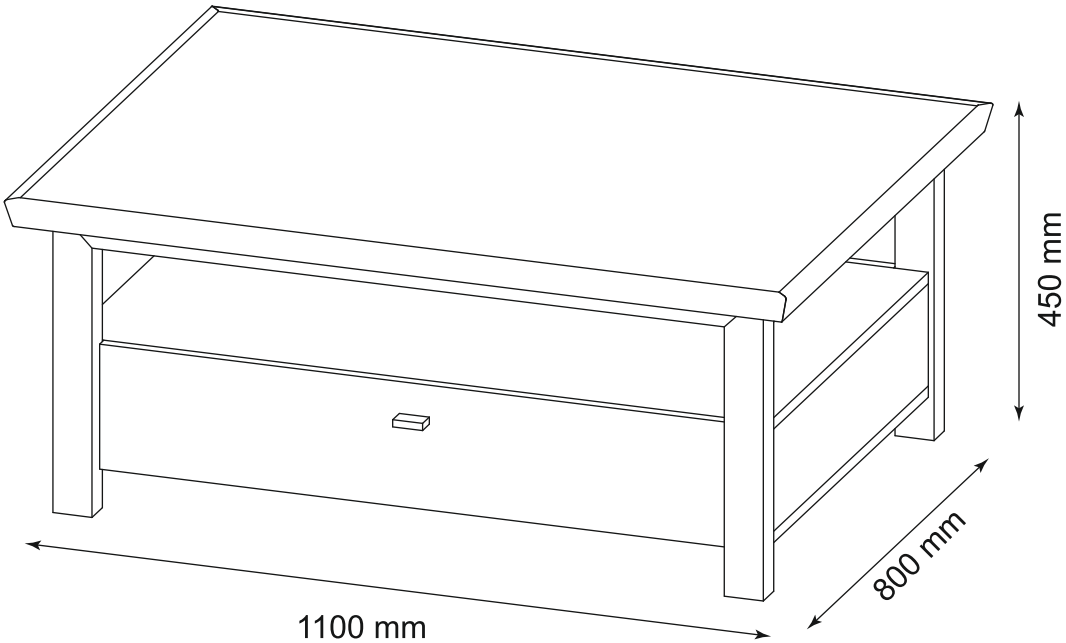

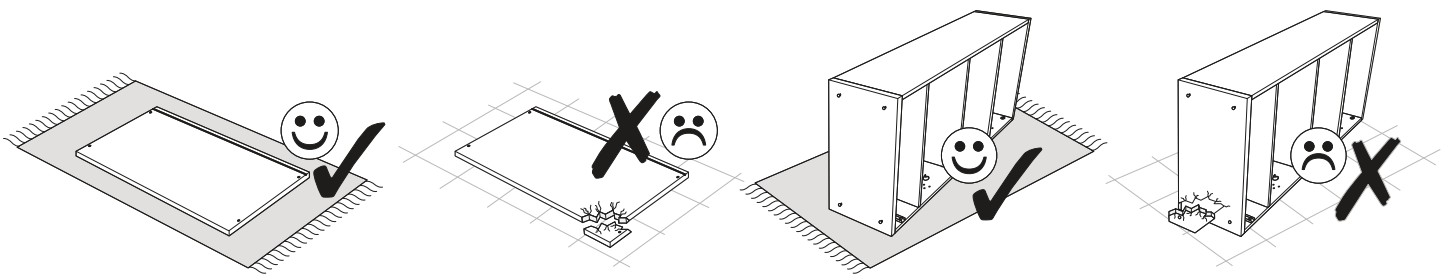

B1 6,4 x 50 mm 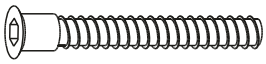 x22	C0 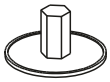 x26	C2 x46
D31 6,3 x 13 mm x16	H2 4 x 22 mm 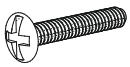 x4	L6 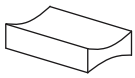 x2
K 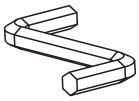 4mm x1	N13 L-300mm 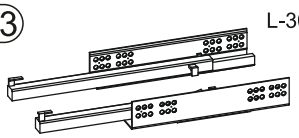 x2	U2 x4
U3 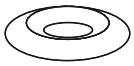 **x4**		

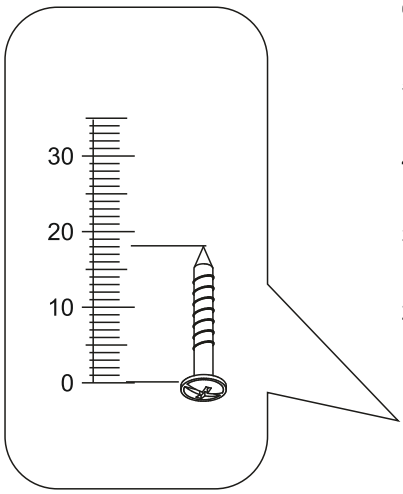

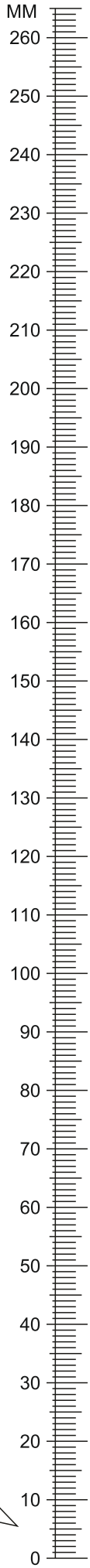

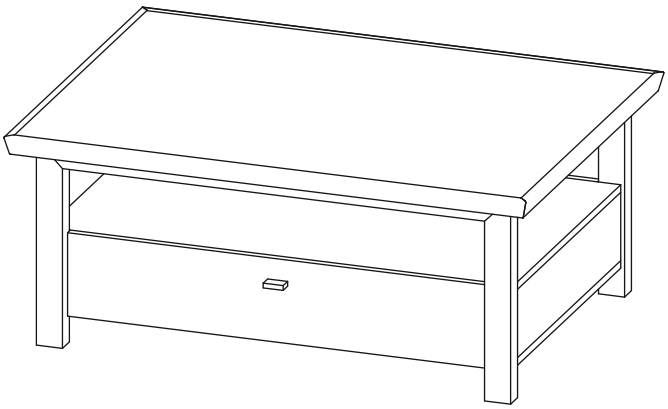

①	1100	x	800	x	25	1	2/2
②	1000	x	434	x	40	2	2/2
③	992	x	620	x	16	1	1/2
④	992	x	620	x	16	1	1/2
⑤	886	x	176	x	16	2	1/2
⑥	860	x	294	x	2,8	2	1/2
⑦	850	x	128	x	16	2	1/2
⑧	620	x	55	x	16	2	1/2
⑨	620	x	144	x	16	2	1/2
⑩	620	x	144	x	16	2	1/2
⑪	300	x	120	x	16	2	1/2
⑫	300	x	120	x	16	2	1/2
⑬	284	x	120	x	16	2	1/2

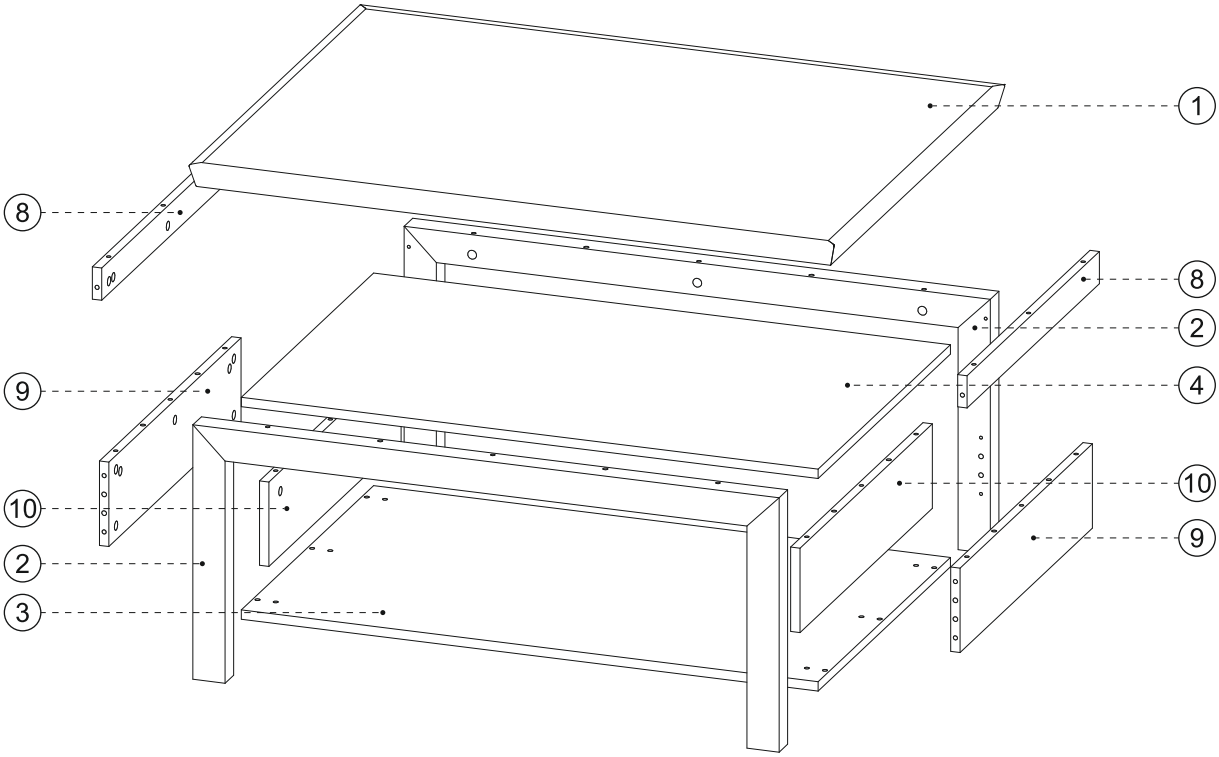

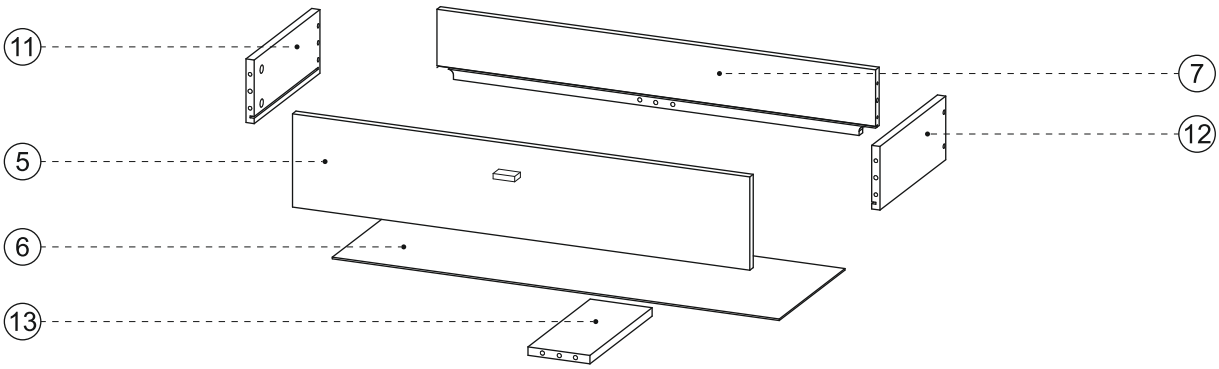

1

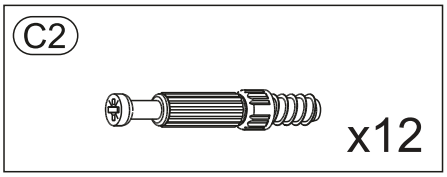
C2
x12

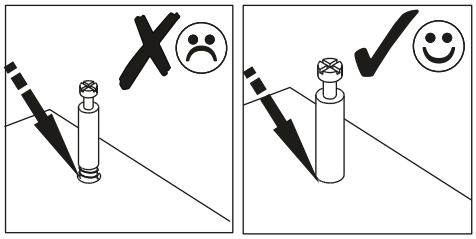

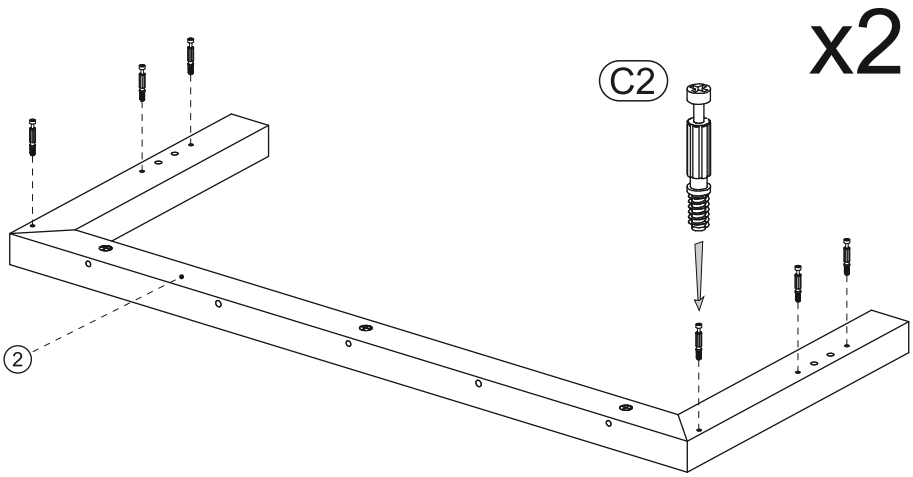
C2
x2
2

2

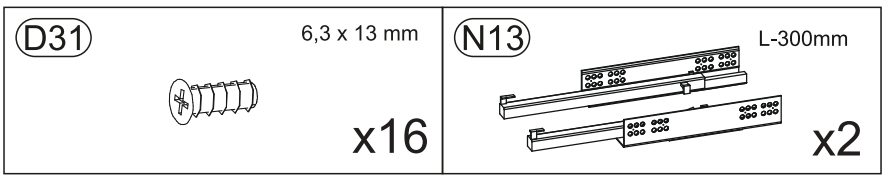
D31
6,3 x 13 mm
x16
N13
L-300mm
x2

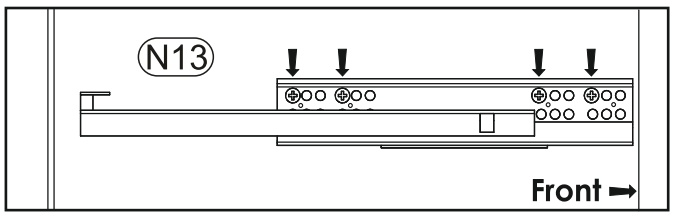
N13
Front

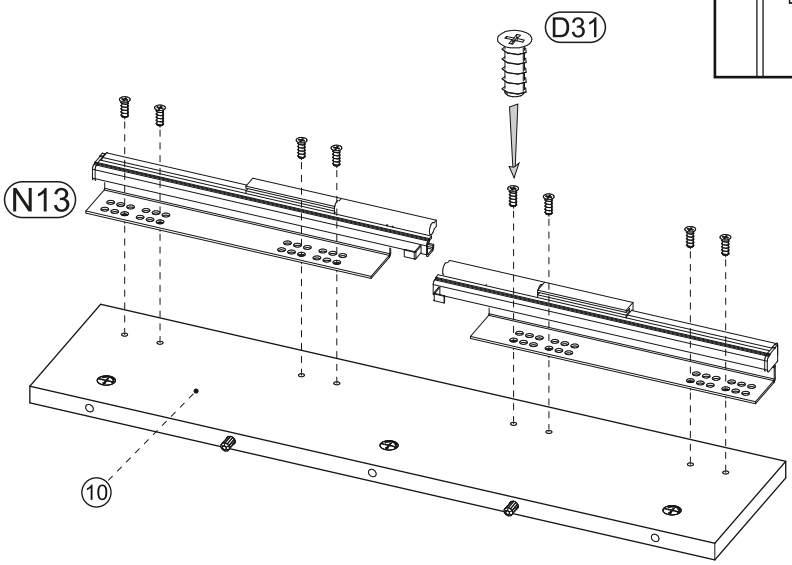
D31
N13
10

x2

3

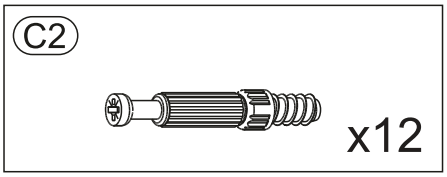

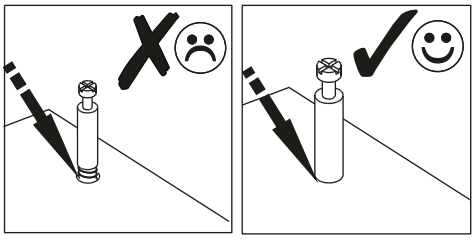

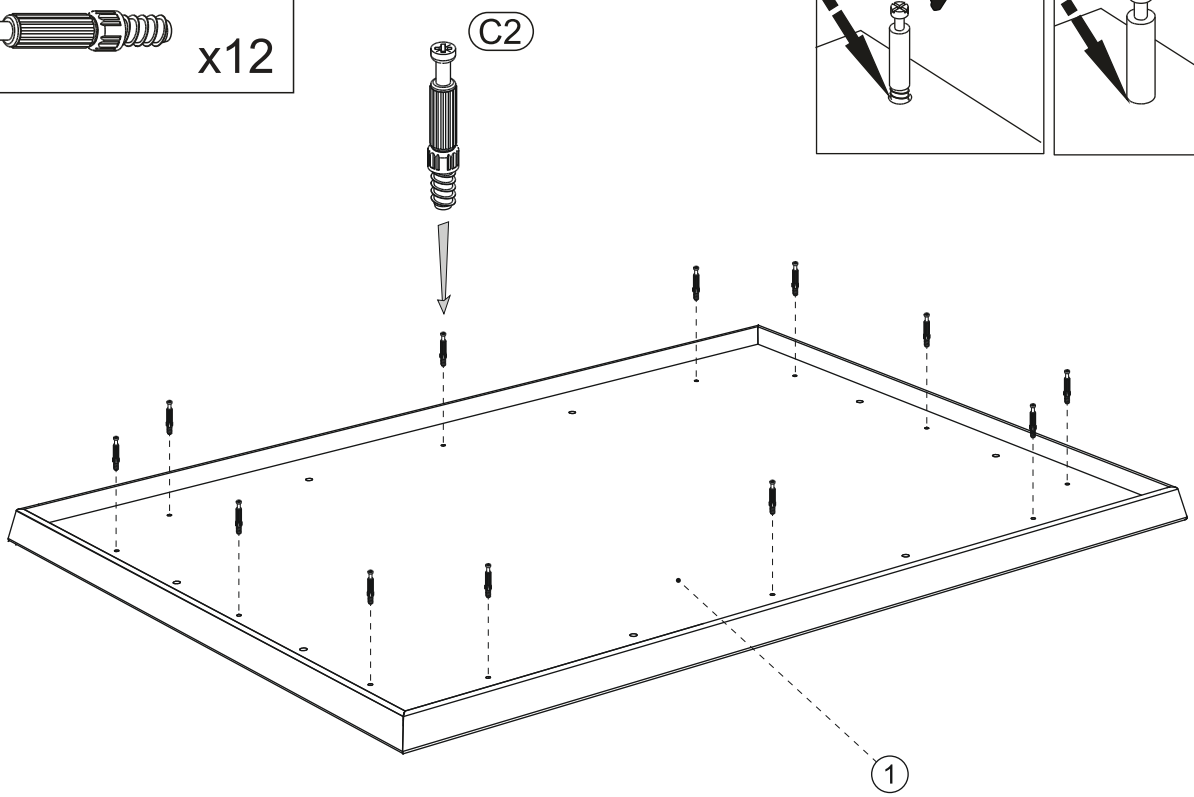

4

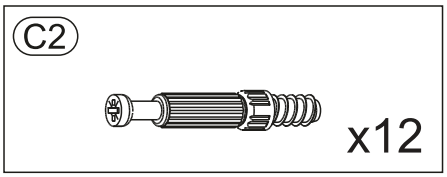

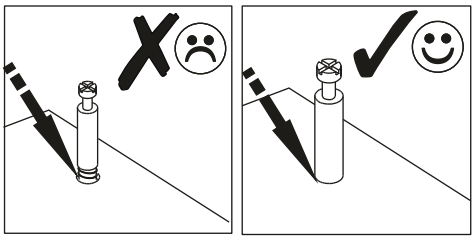

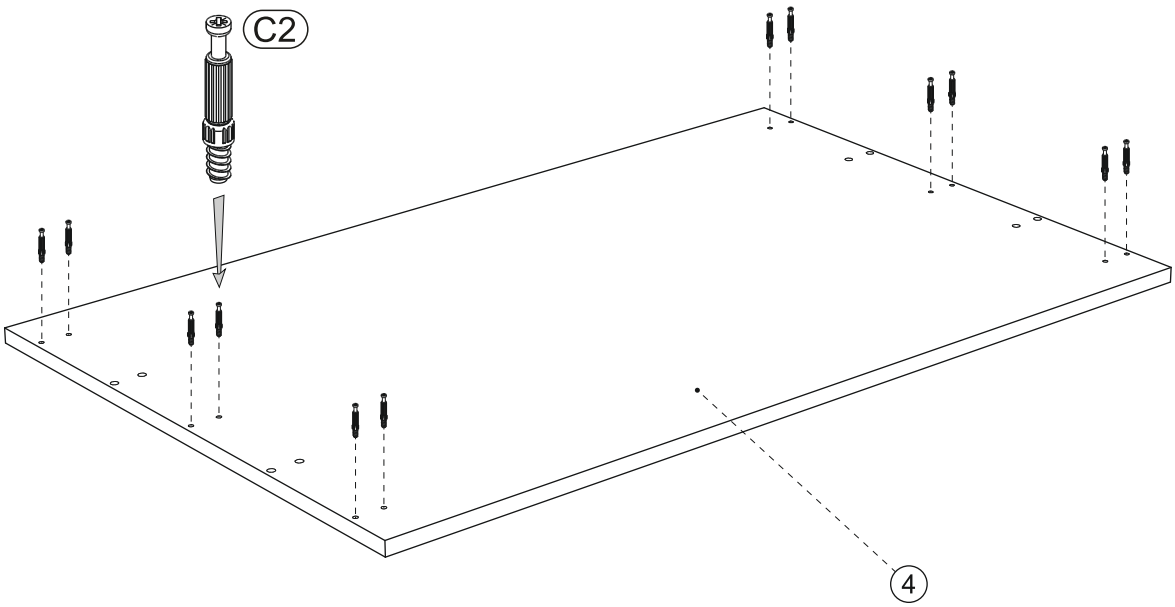

5

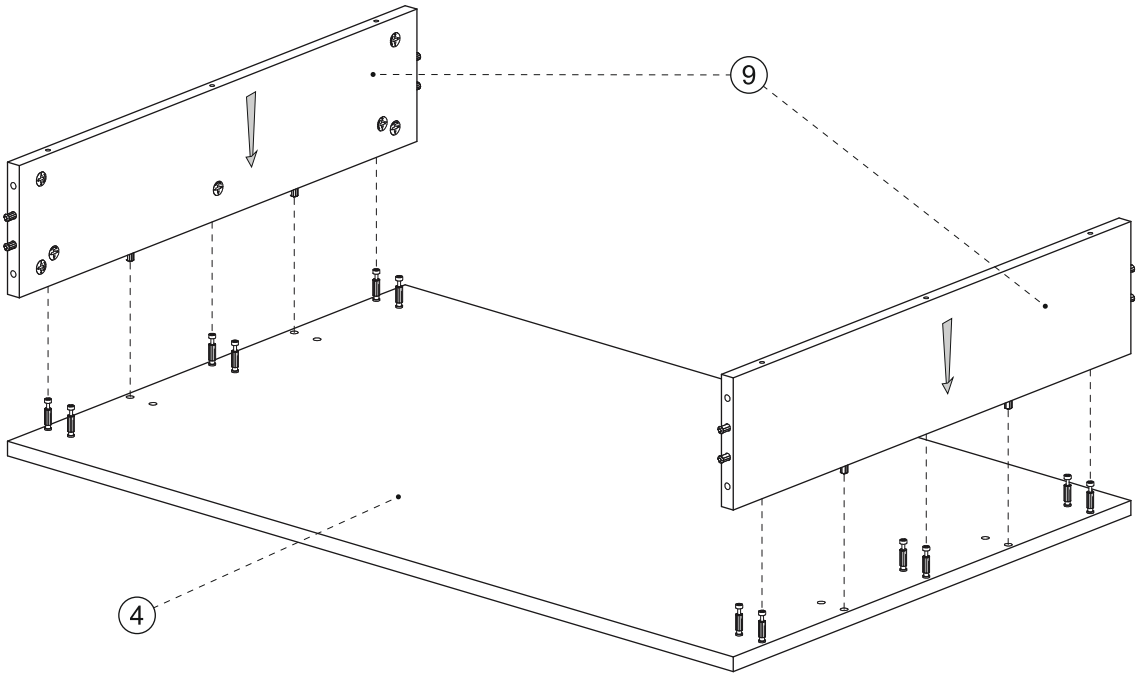

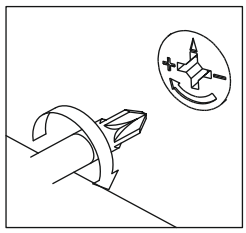

6

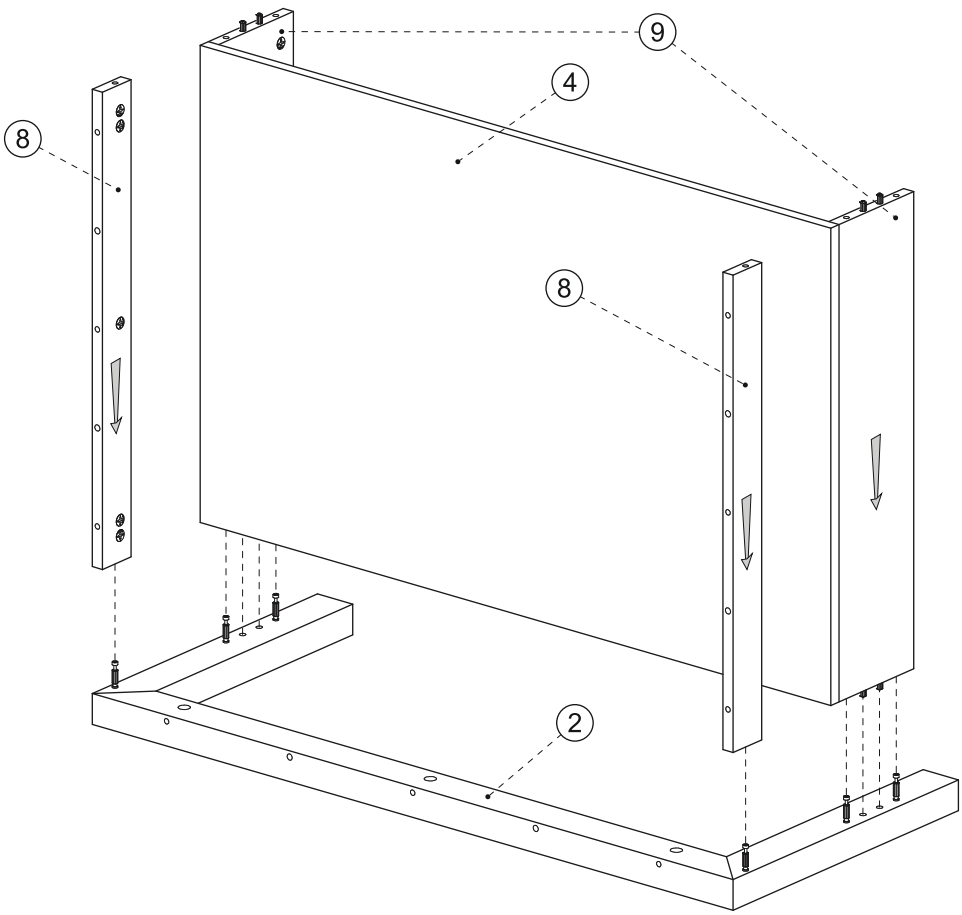

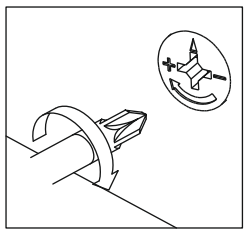

7

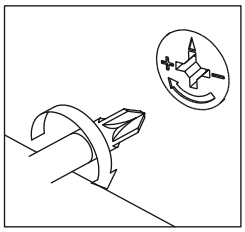

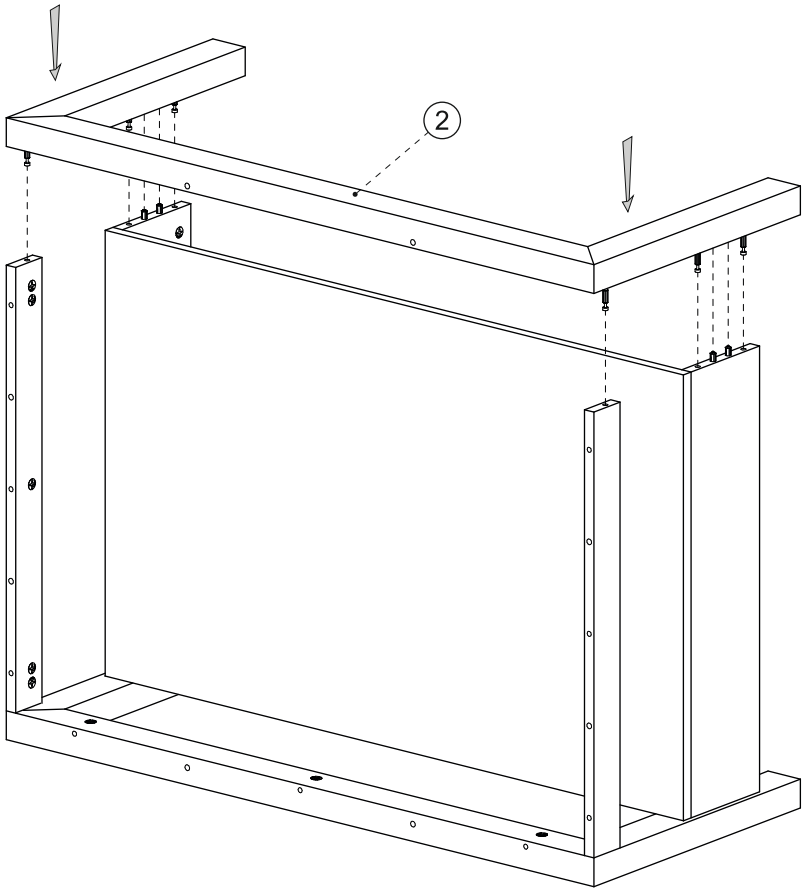

8

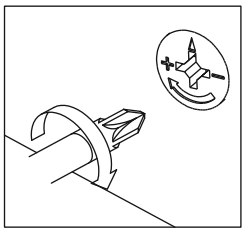

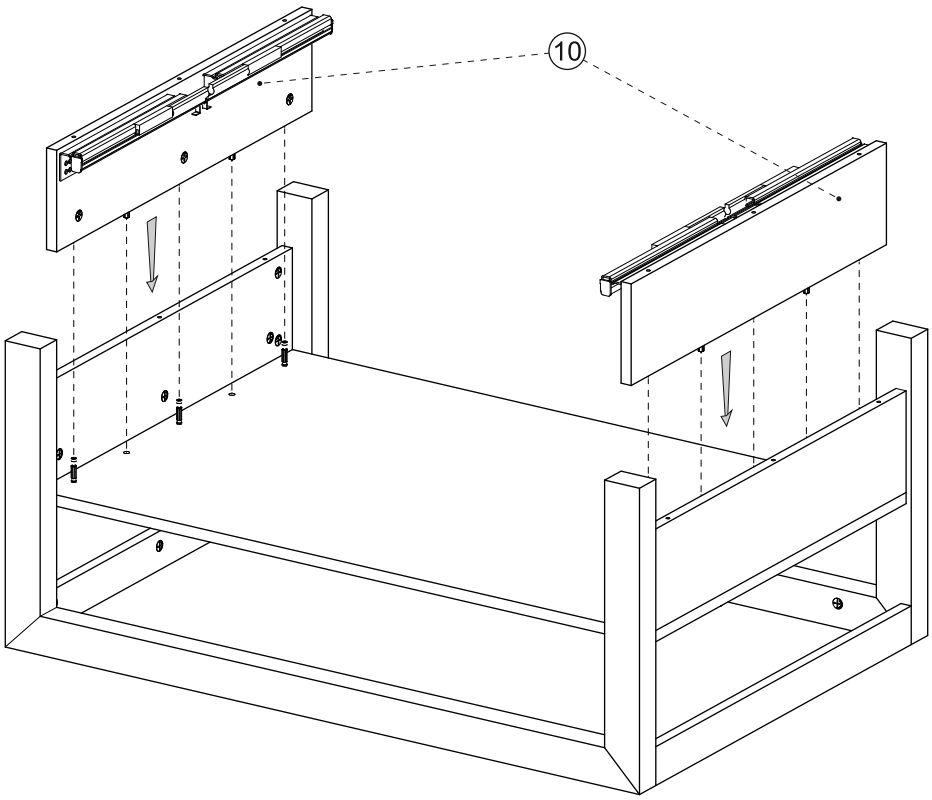

9

B1 6,4 x 50 mm	K	U2
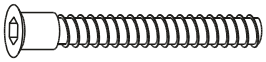 x12	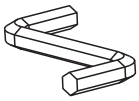 x1	x4

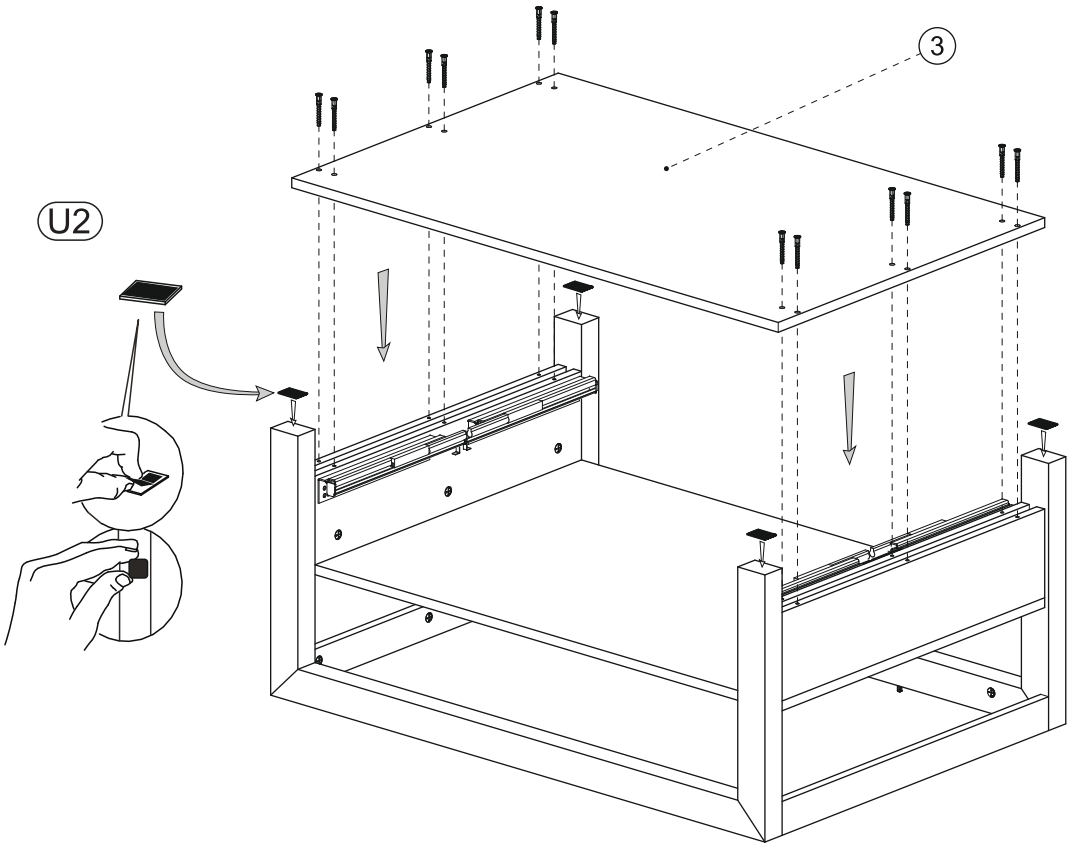

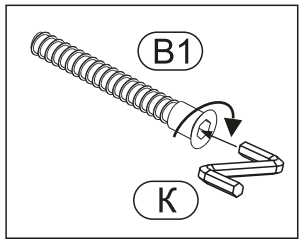

10

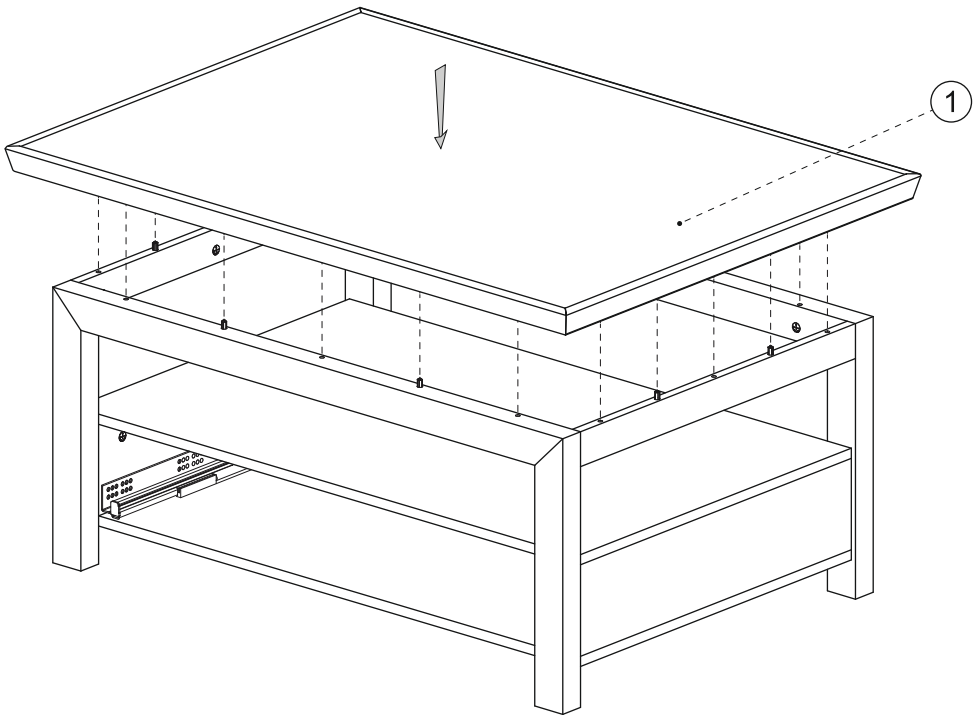

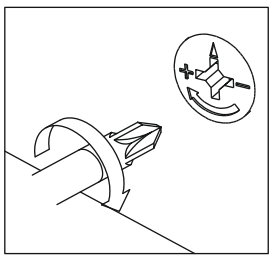

11

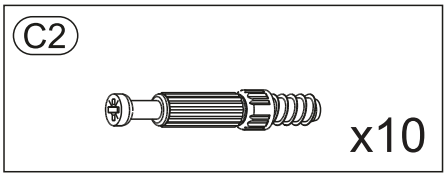

x2

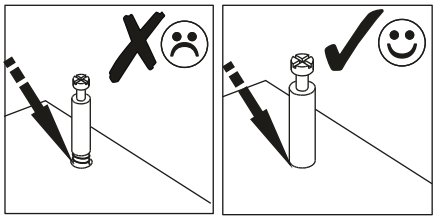

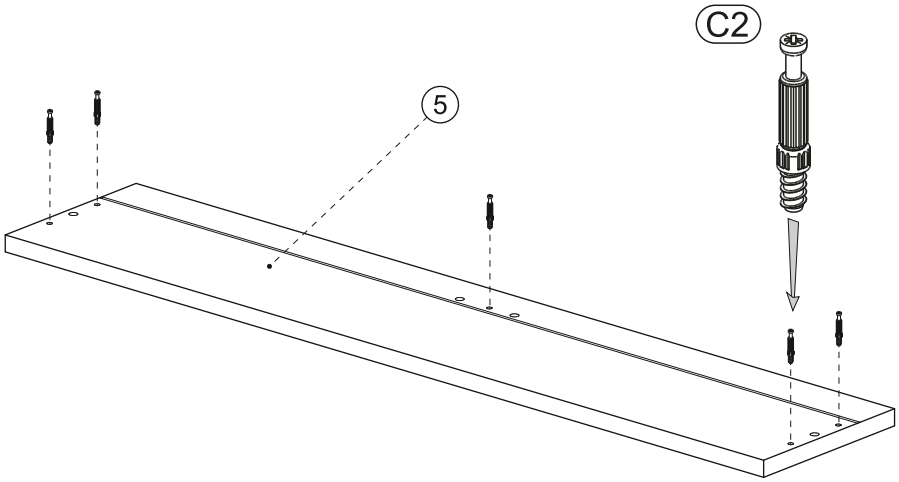

12

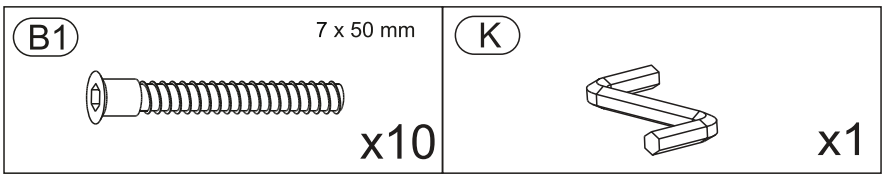

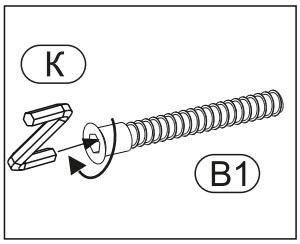

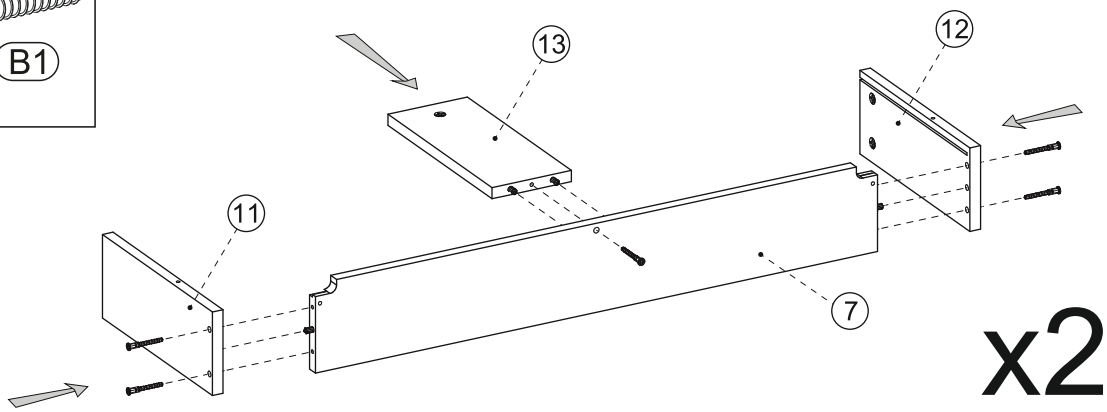

13

H2 4 x 22 mm	L6	U3
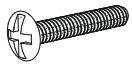 x4	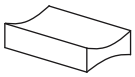 x2	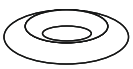 x4

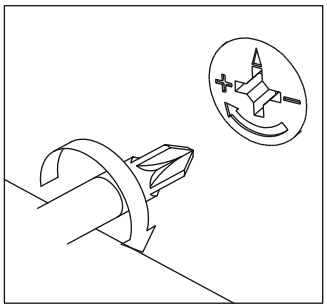

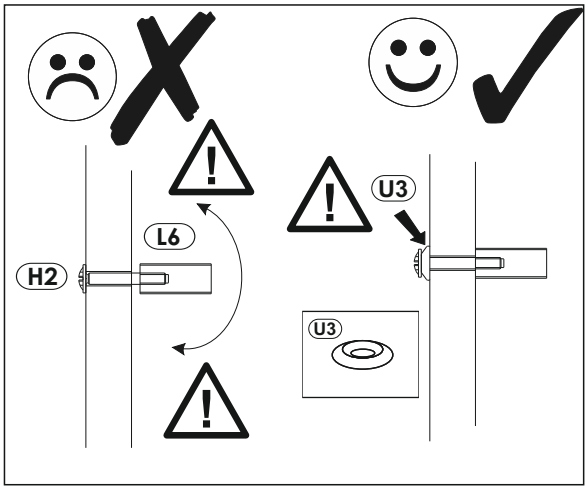

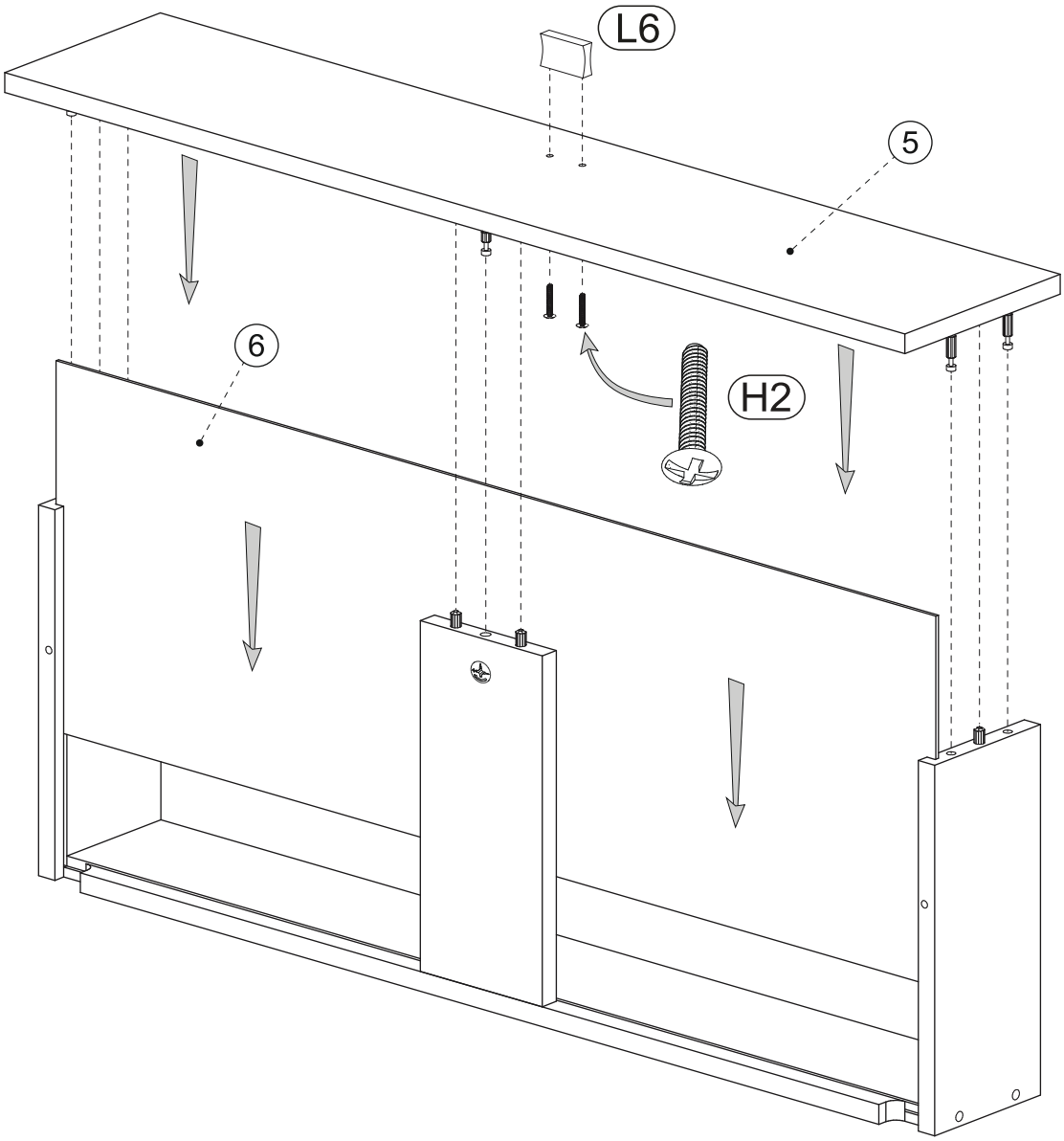

x2

14

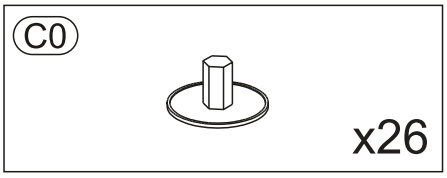

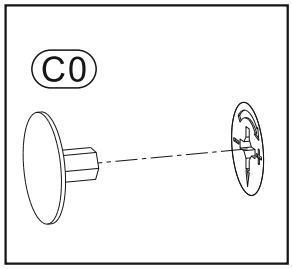

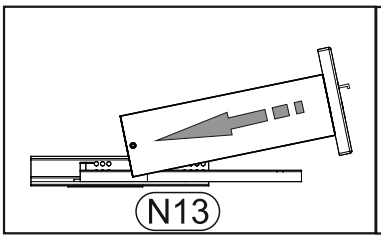

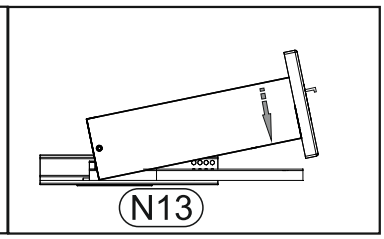

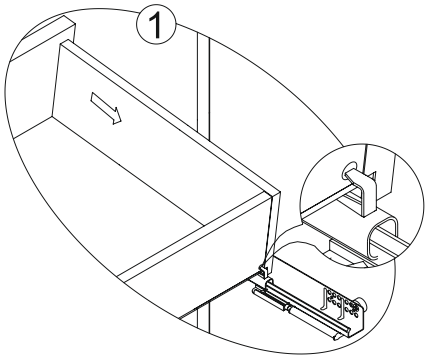

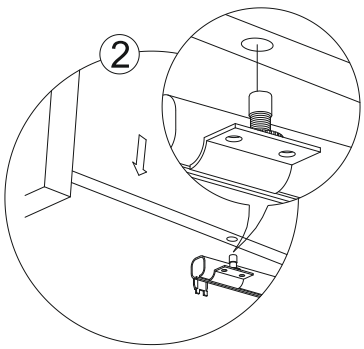

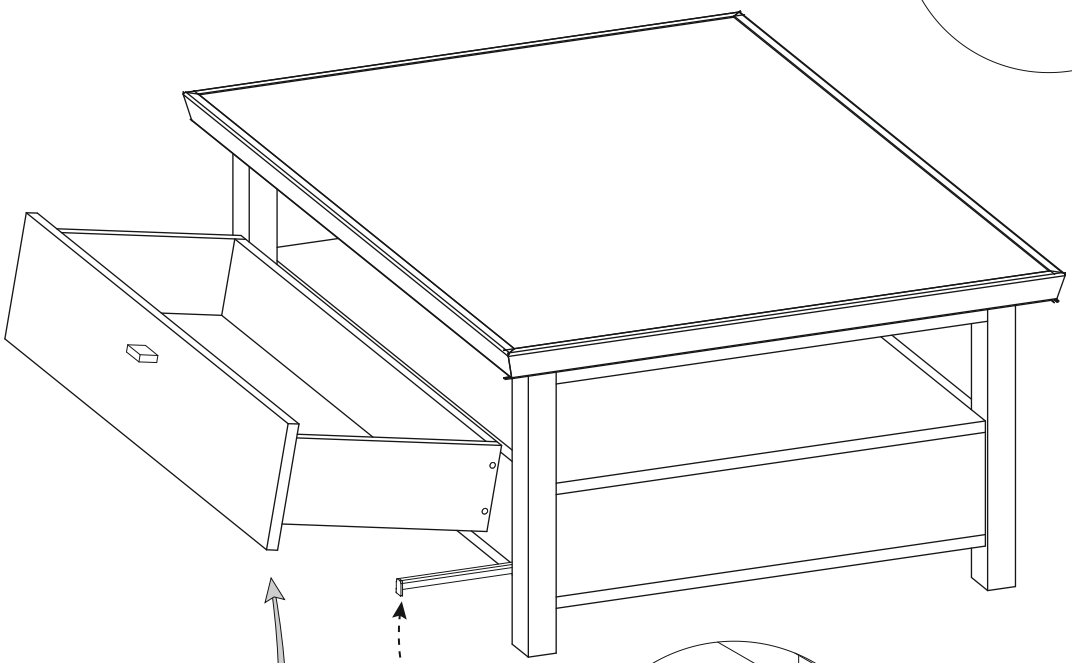

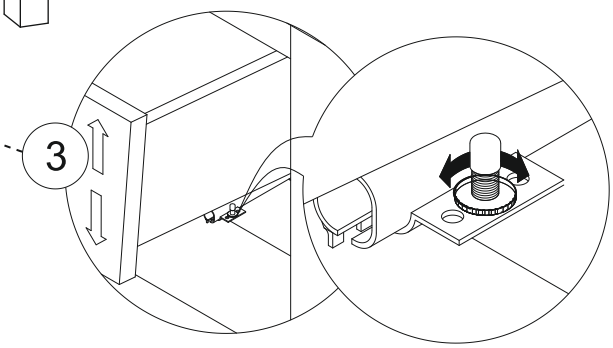

x2
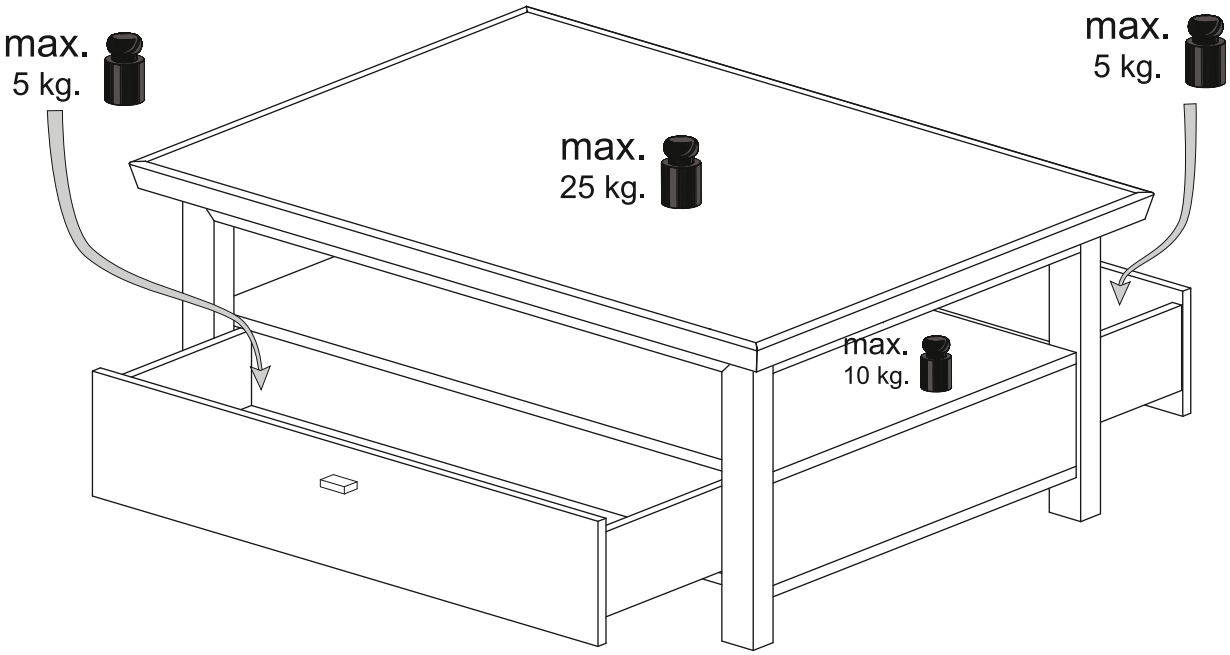
15