17130169-01
SIDEBOARD

BDSK Handels GmbH & Co.KG
Mergentheimer Straße 59
DE-97084 Würzburg
E-Mail:Info@xxxlutz.at

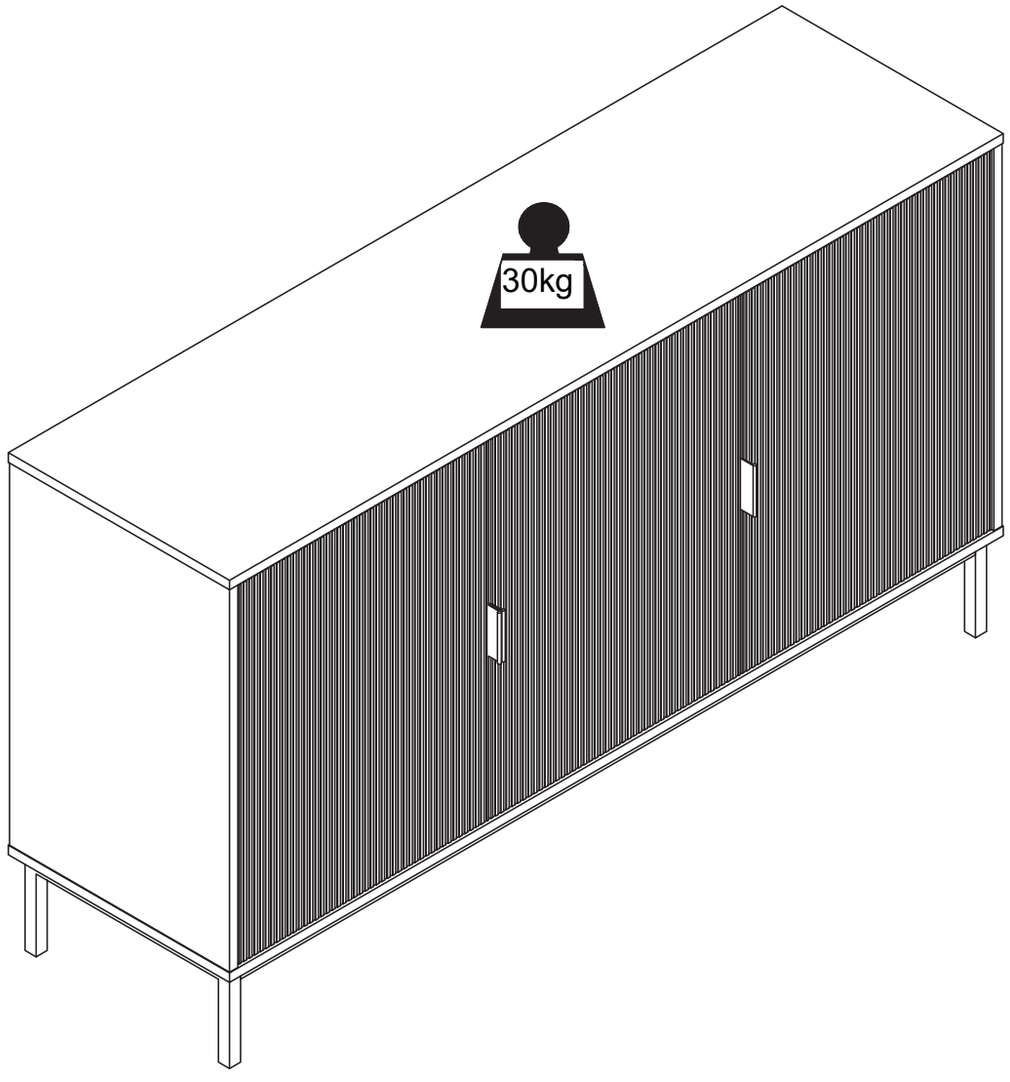

22
PAP



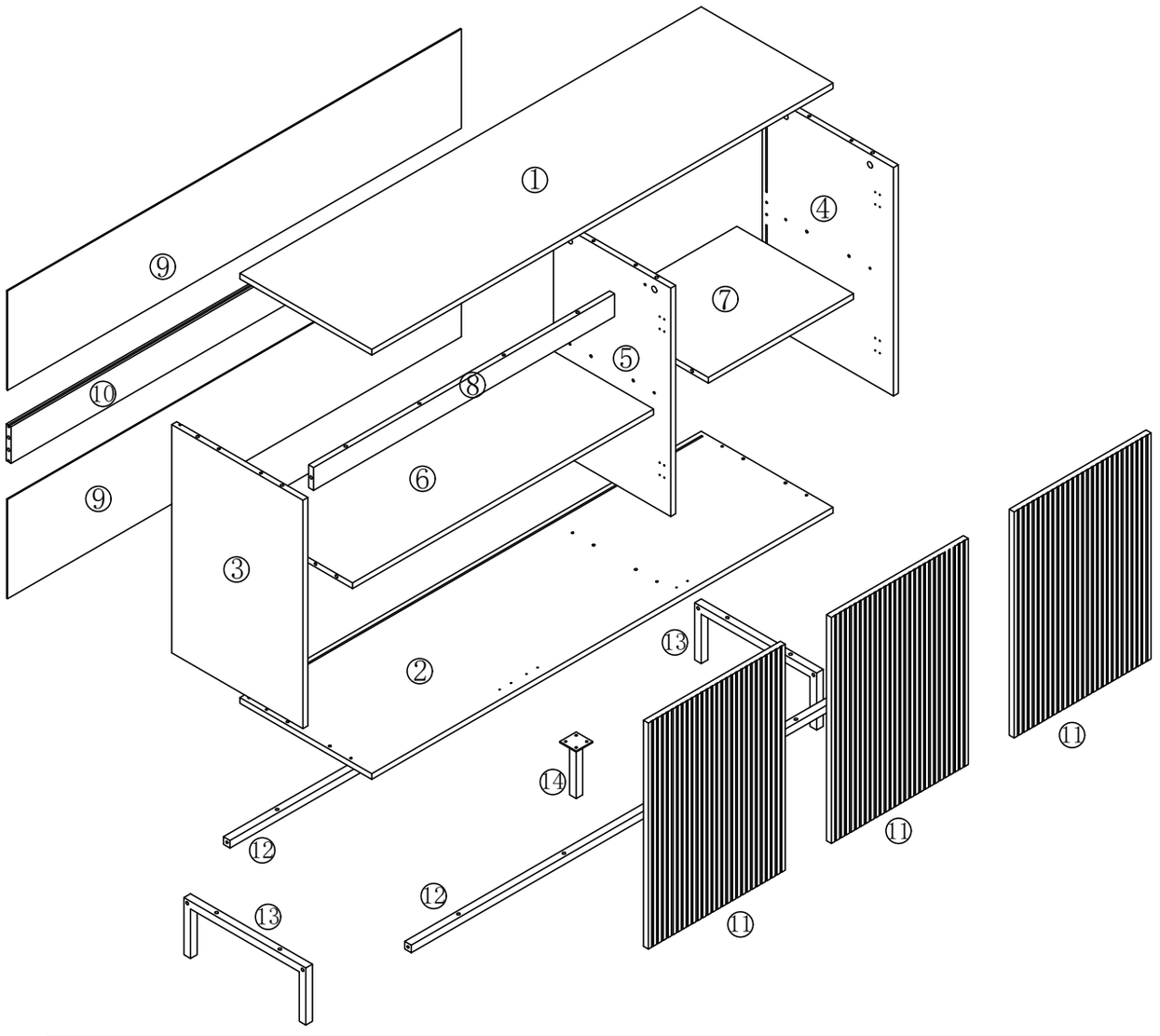

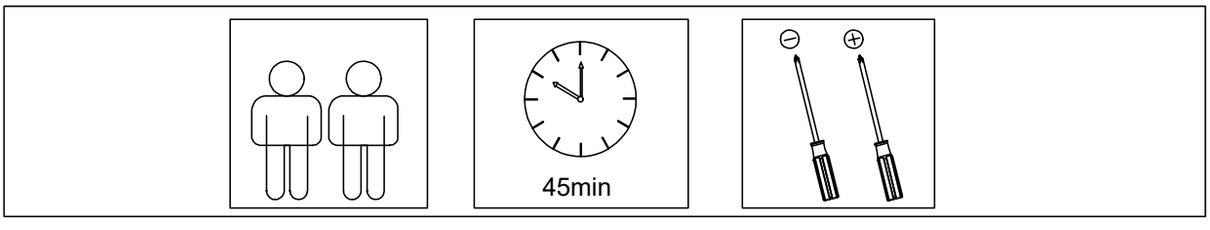

A ×22	B ×22	C ×18	D ×10	E ×20	F ×12	G ×4
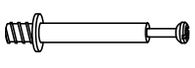		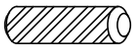				
M6x35MM	φ15x9	Φ6x30	M4x40MM	M3x14MM	M6x30MM	M6x40MM

H ×1	I ×6	J ×3	K ×58	L ×16	M ×4	N ×2
		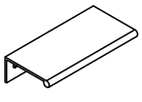		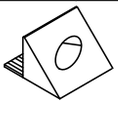		
			M3.5x14MM		M3.5x12MM	

O ×2	P ×2	Q ×6	R ×6	S ×1	U ×2	V ×2
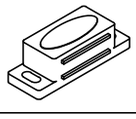		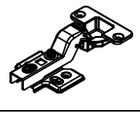		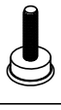	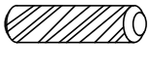	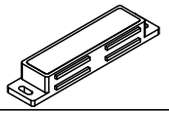
					Φ6x50	

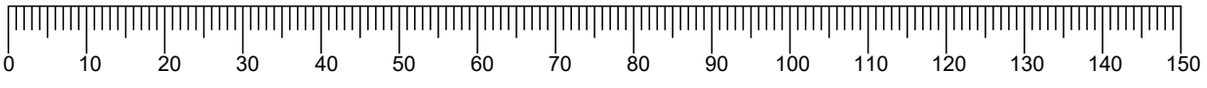

①

A	×22	E	×8
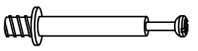			
M6x35MM		M3x14MM	
O	×2	V	×2
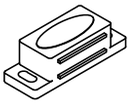		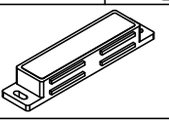	

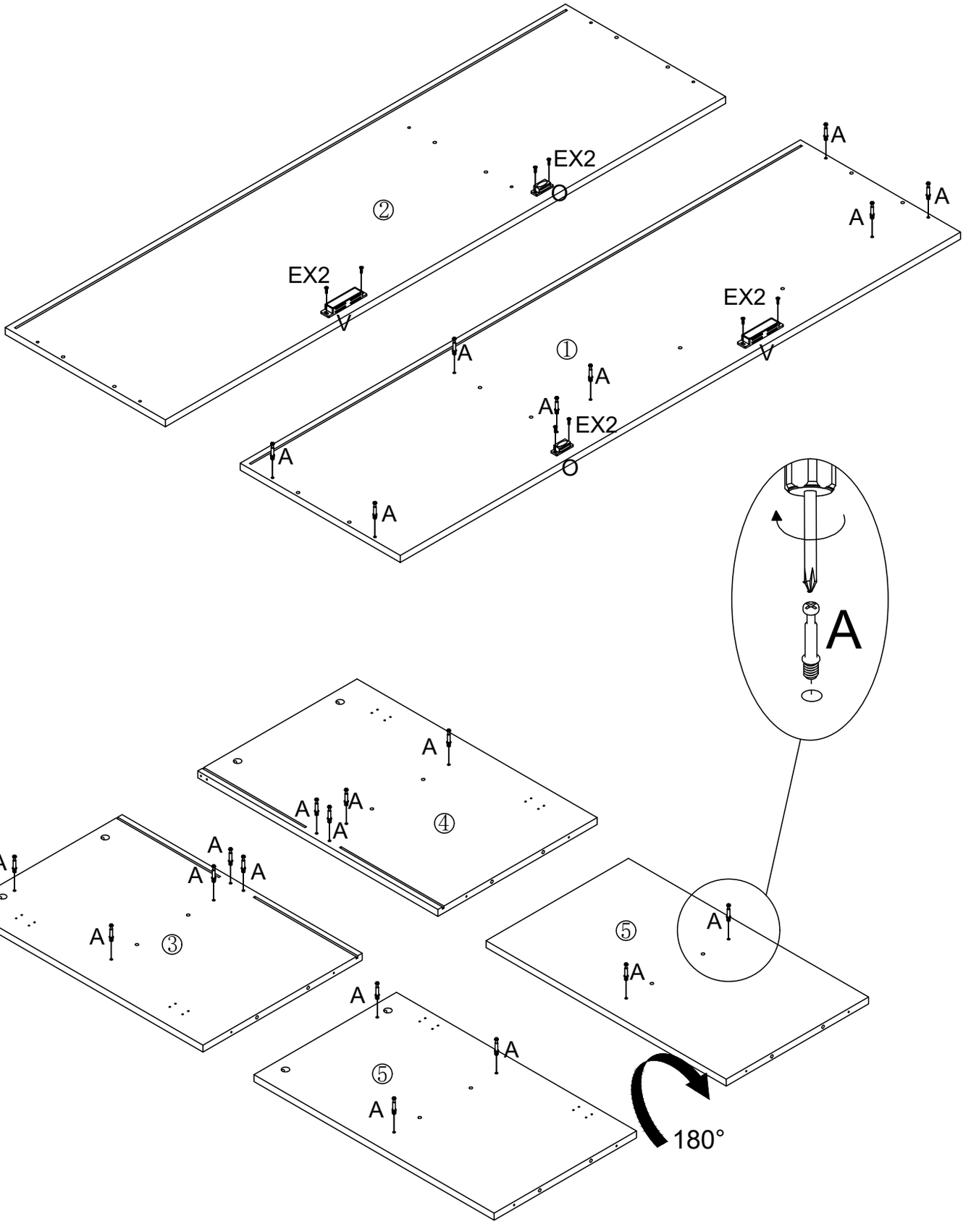

②

D	×2
M4x40MM	

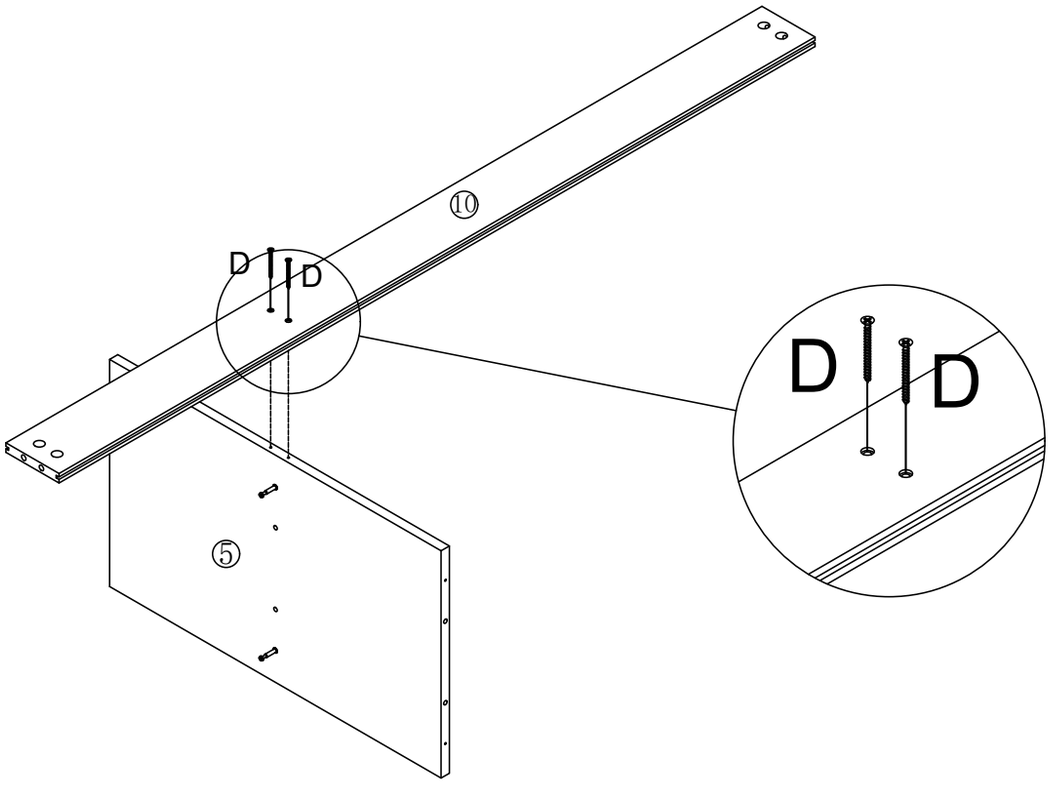

③

B	×2
φ15x9	

U	×2
φ6x50	

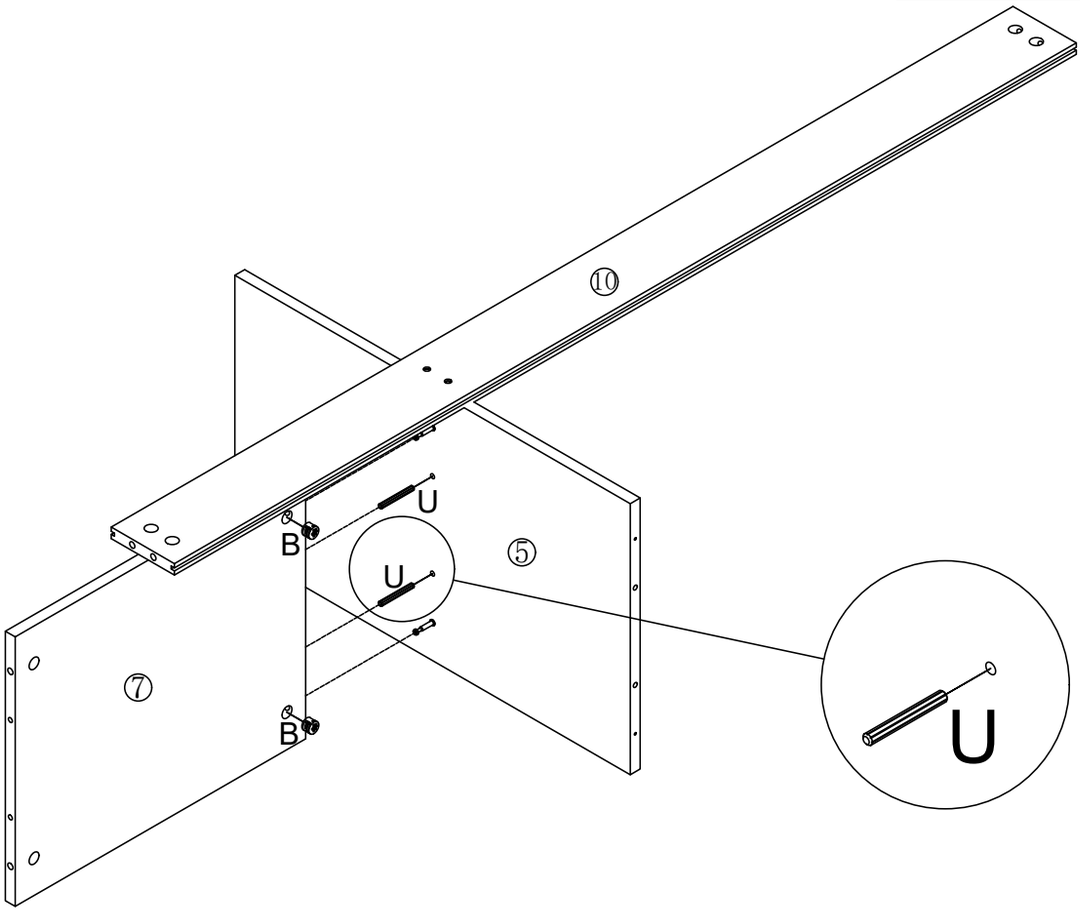

④

B	×4
φ15x9	

C	×2
φ6x30	

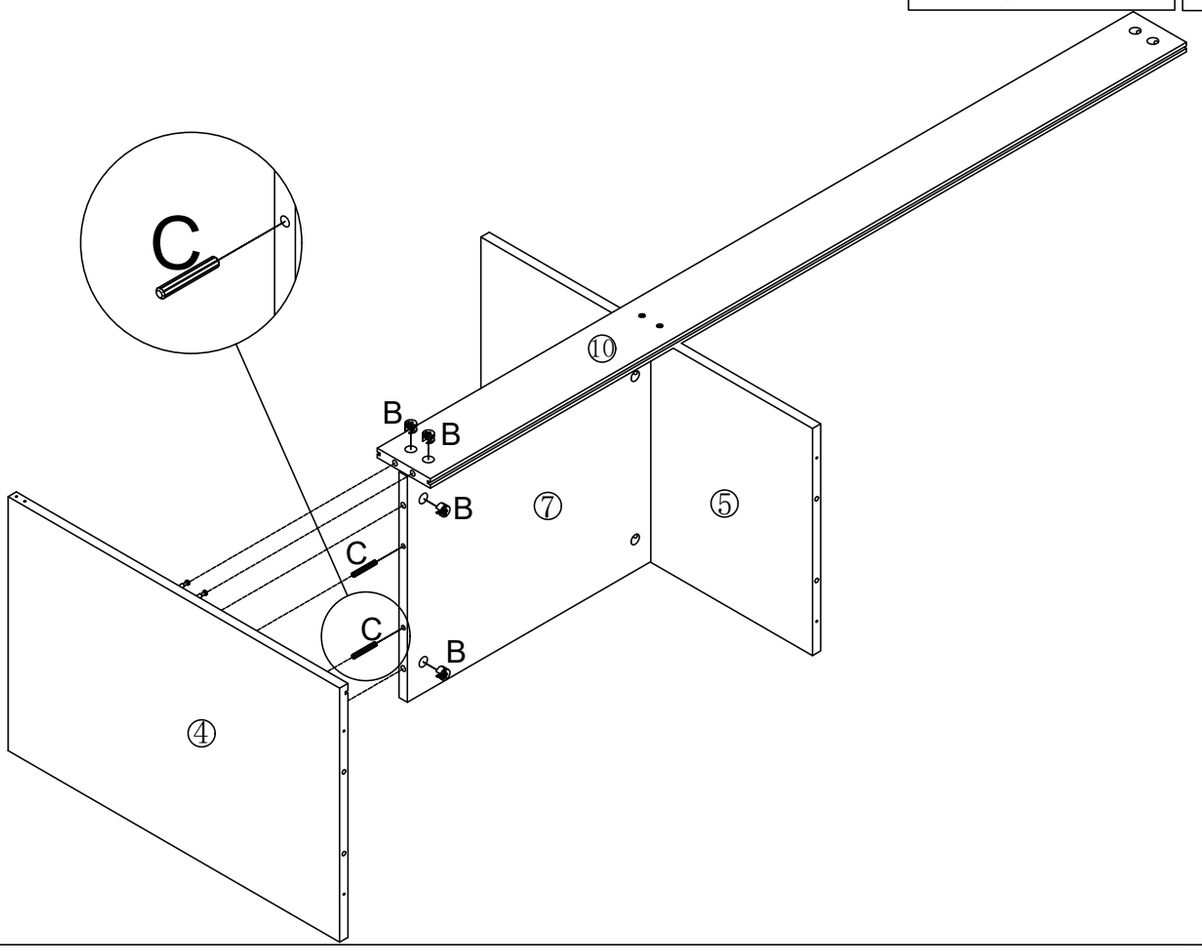

⑤

B	×3
φ15x9	

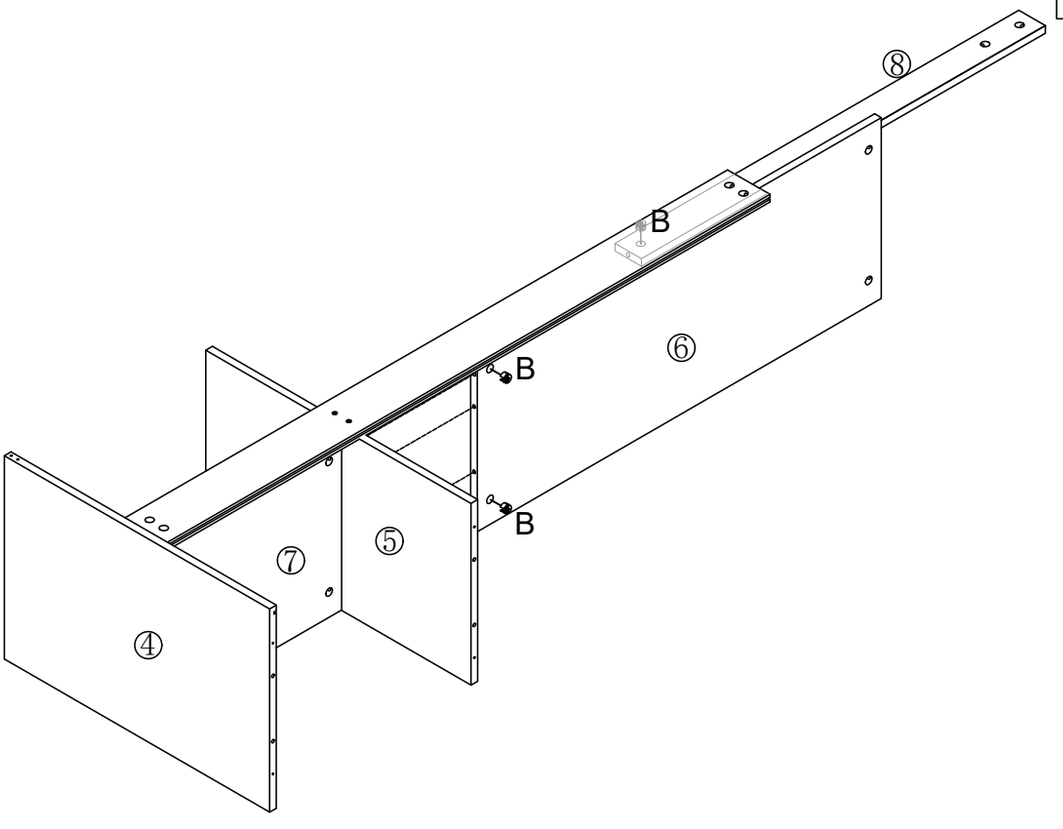

⑥

B	×5
φ15x9	

C	×2
φ6x30	

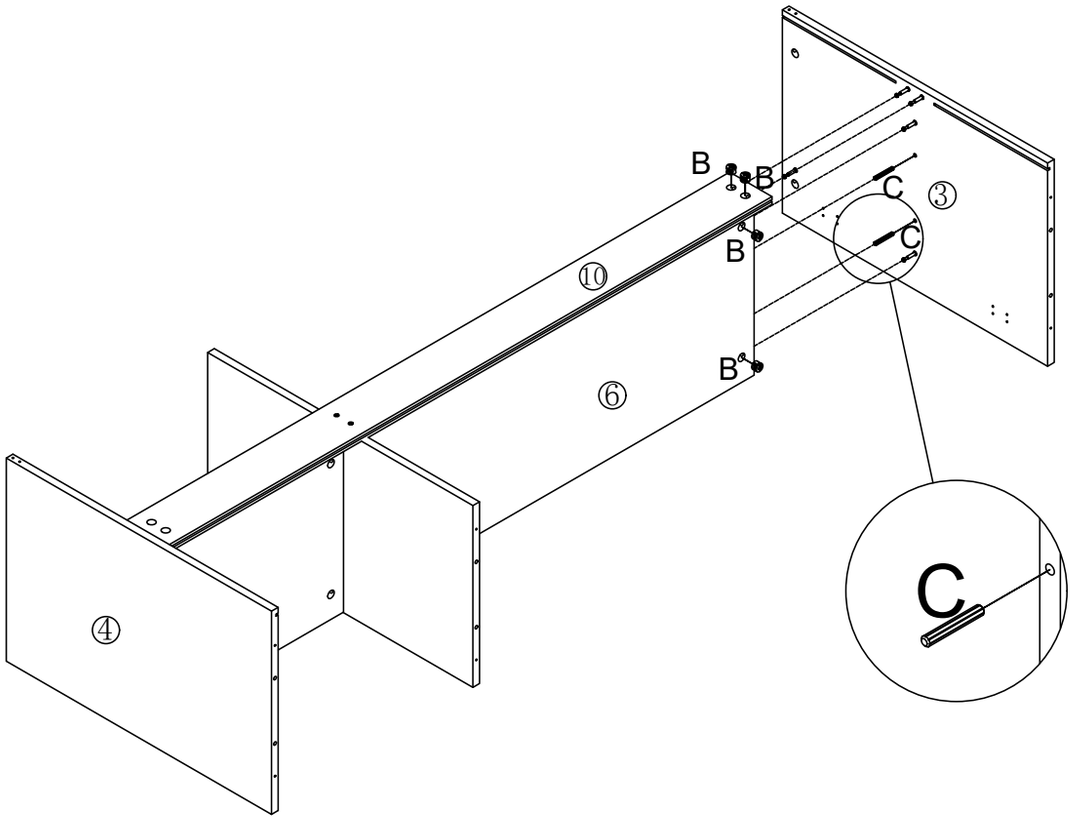

⑦

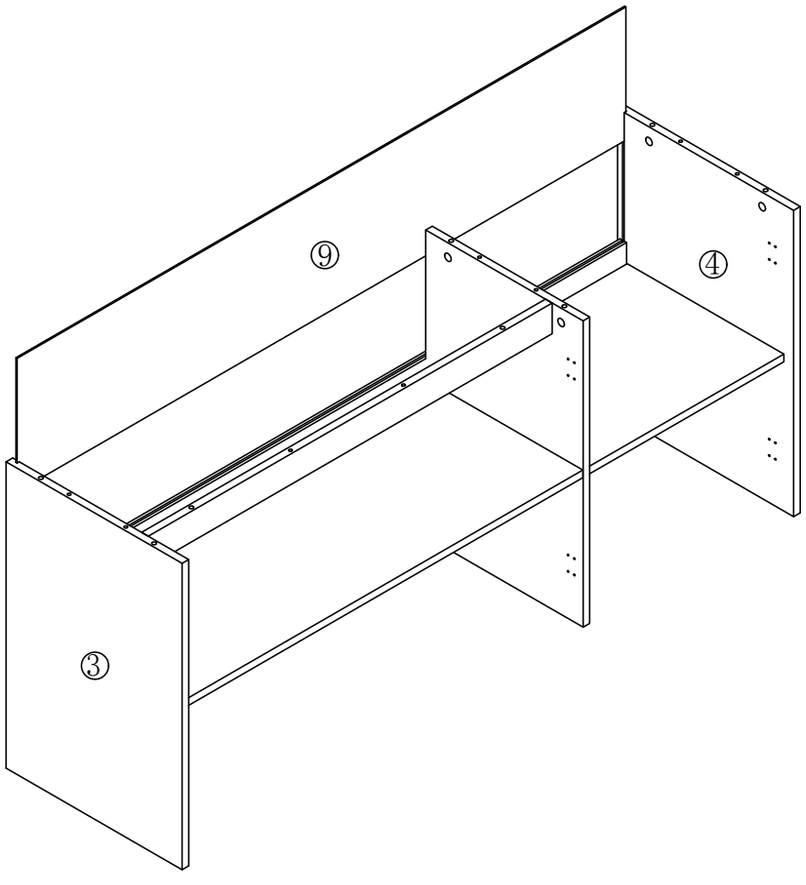

8

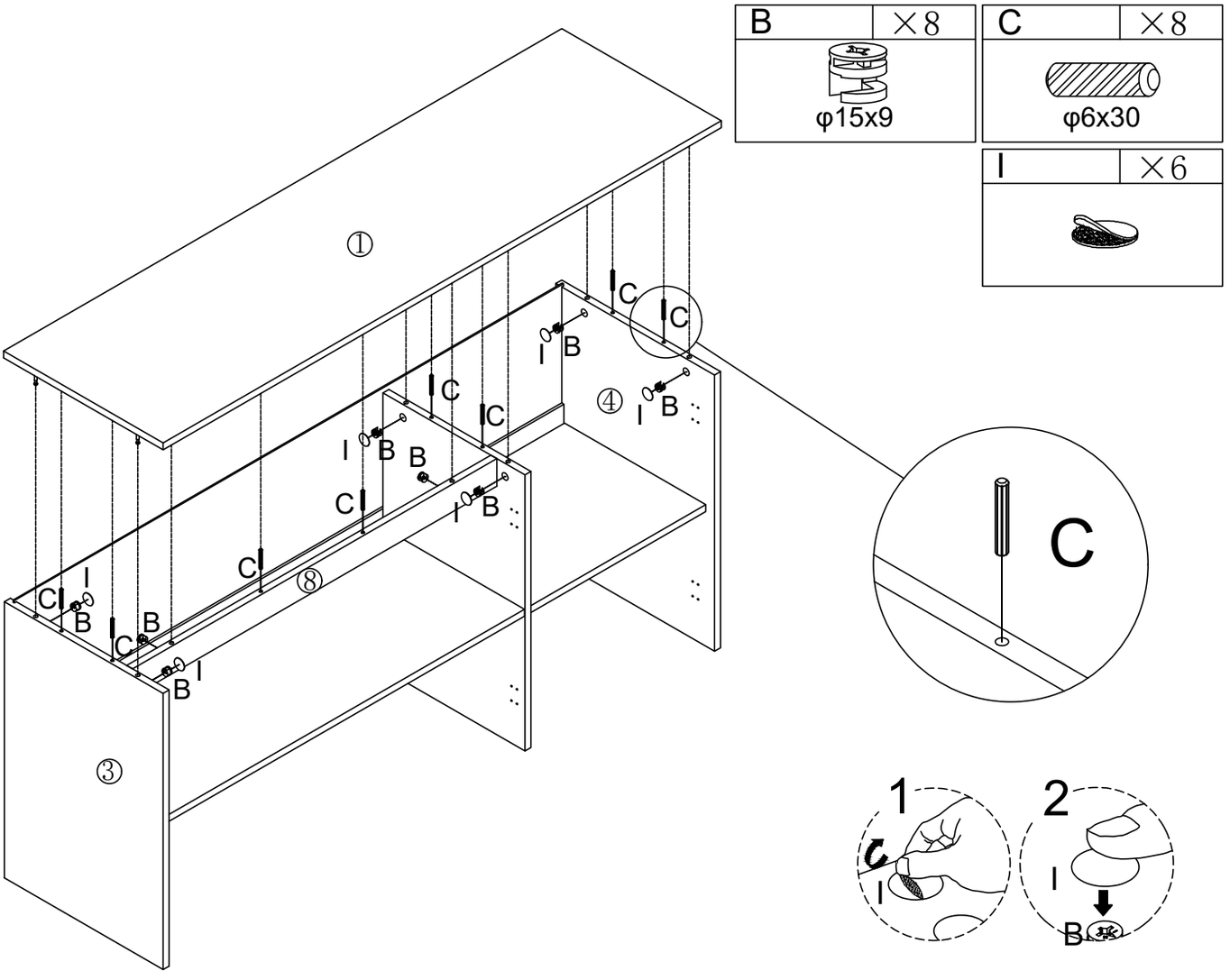

9

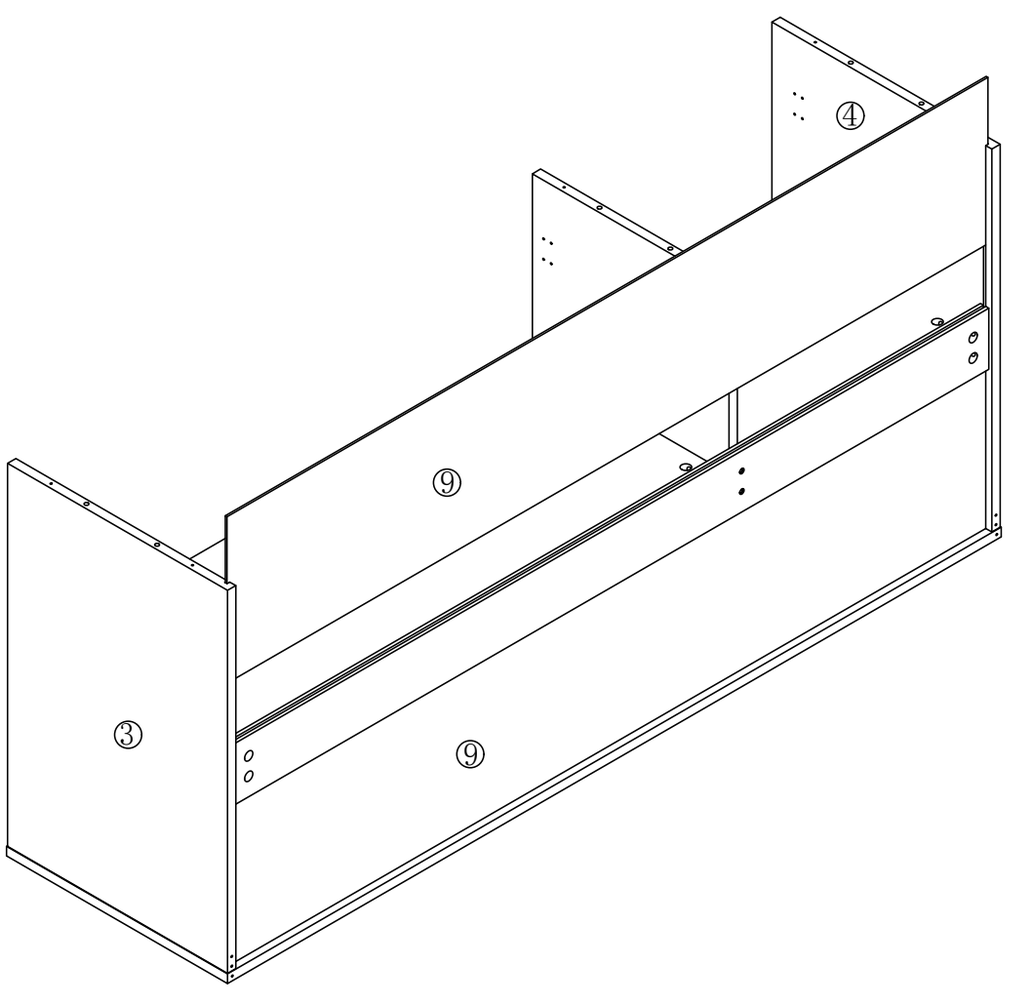

10

C	×6
φ6x30	

D	×6
M4x40MM	

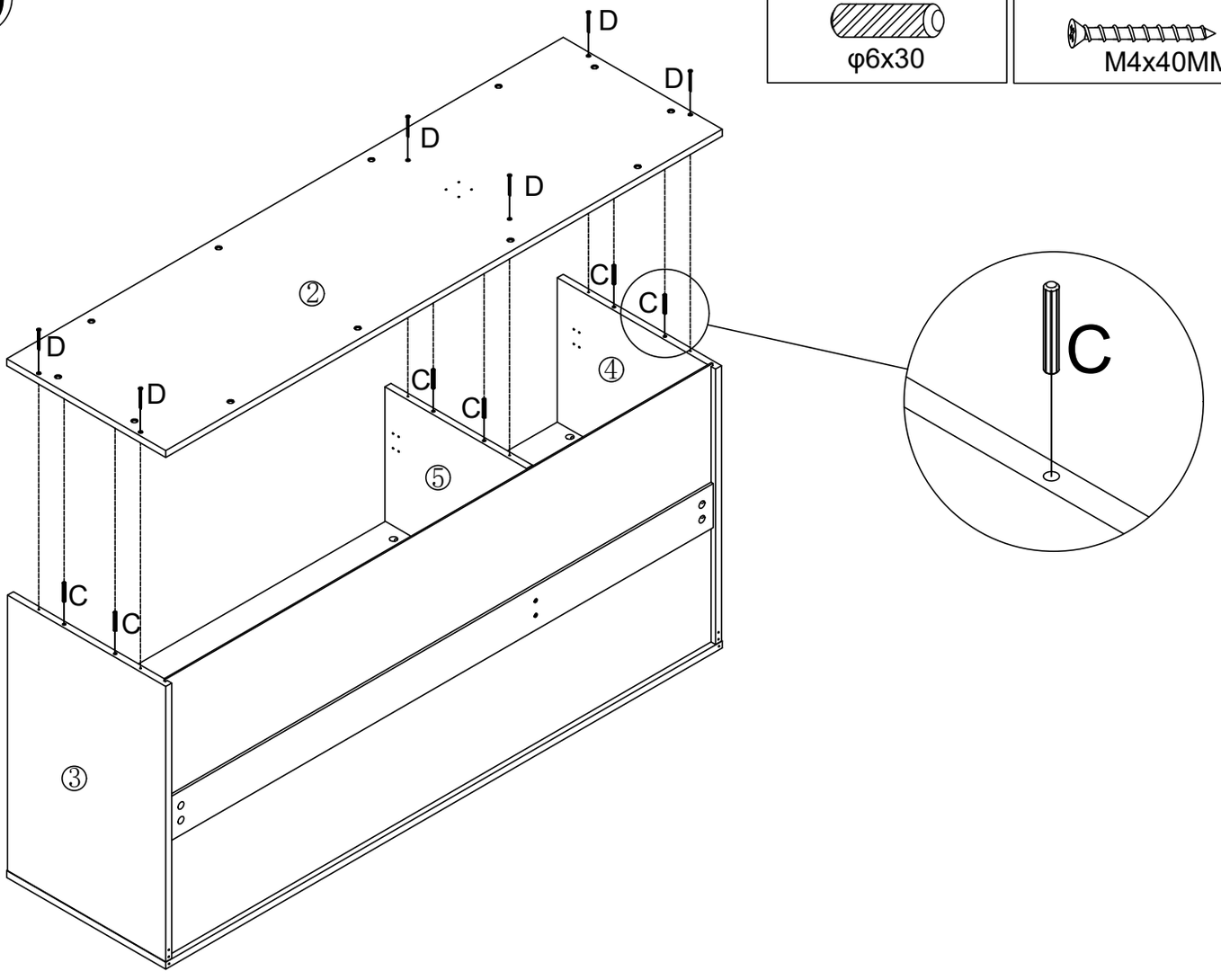

11

G	×4
M6x40MM	

H	×1

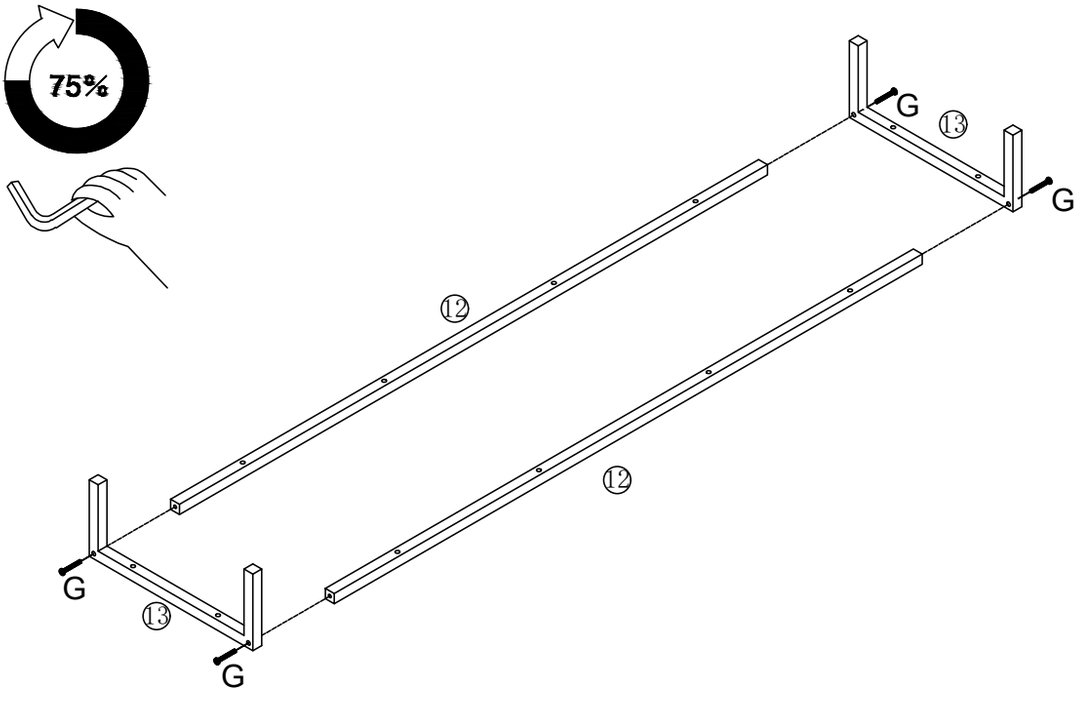

12

F	×12
M6x30MM	

H	×1

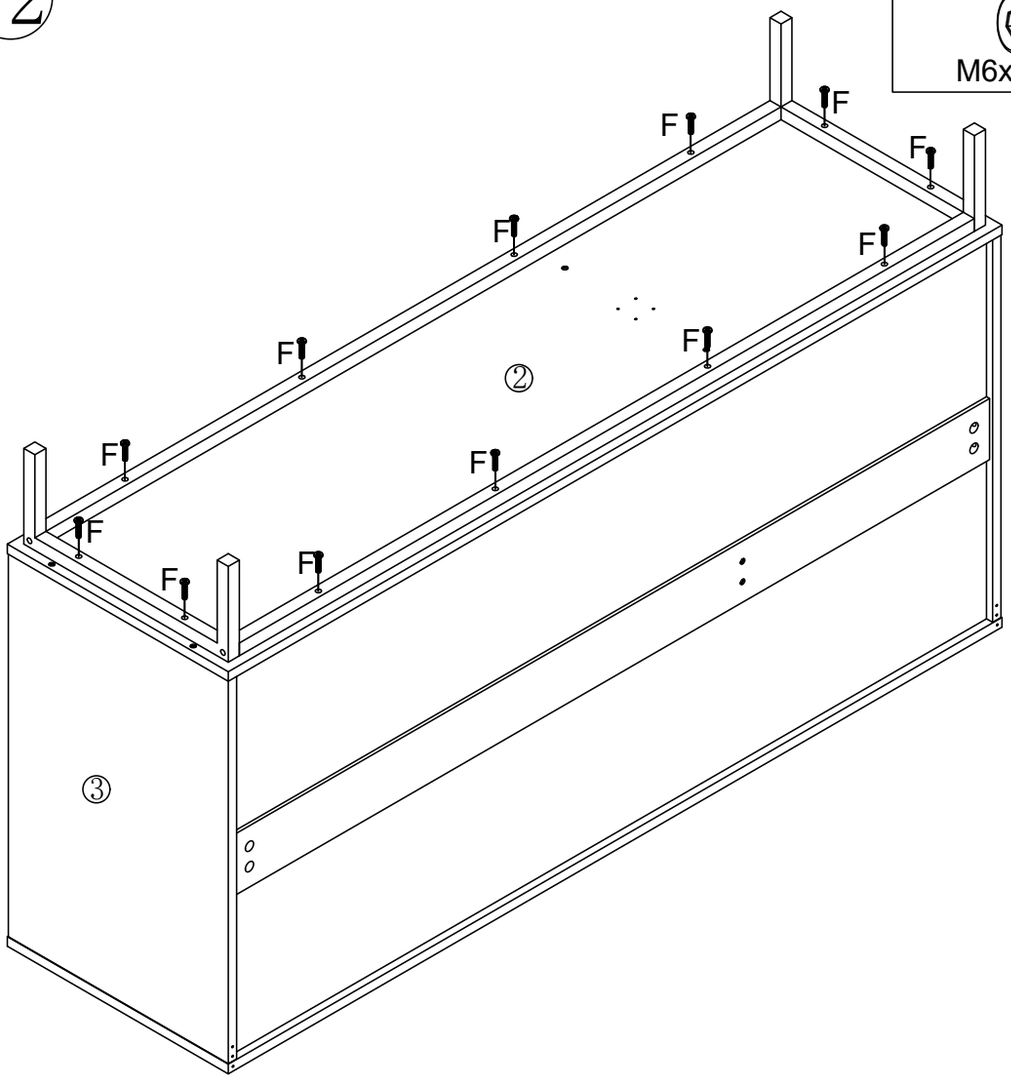

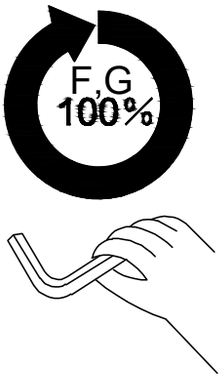

13

M	×4
M3.5x12MM	

S	×1

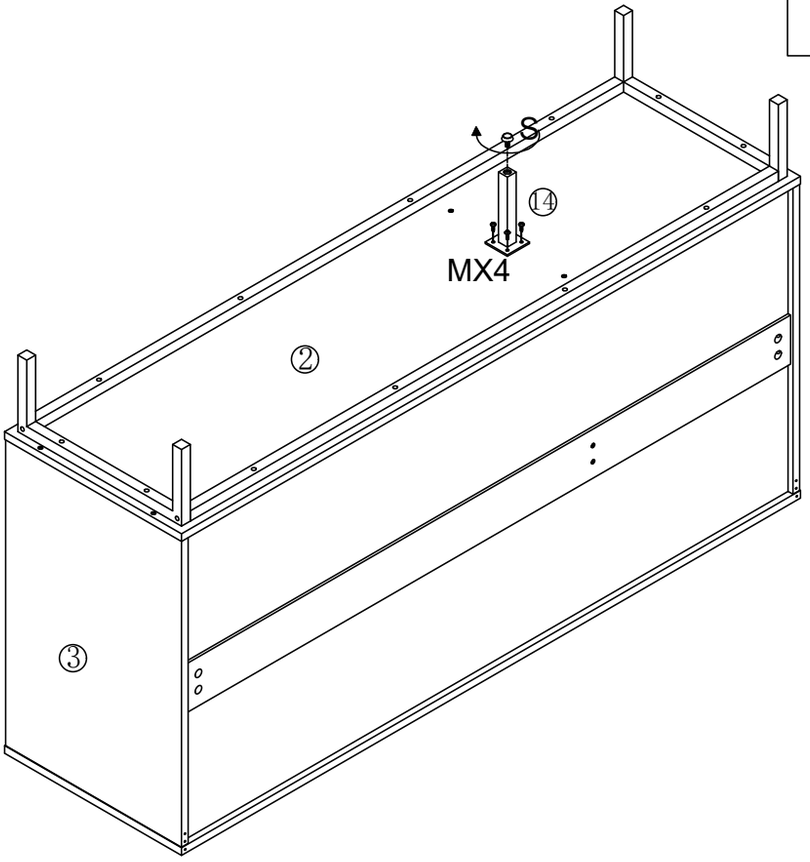

14

L	×16

N	×2

K	×22
M3.5x14MM	

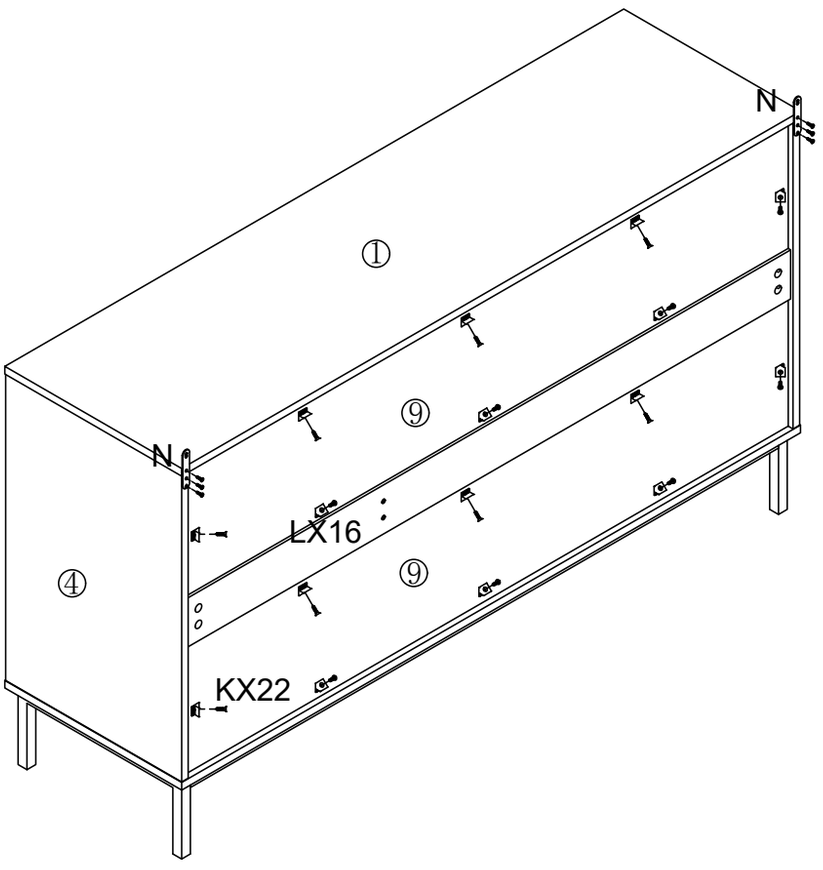

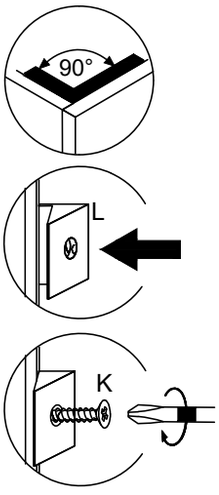

15

J	×3

K	×12
M3.5x14MM	

Q	×6

E	×12
M3x14MM	

R	×6

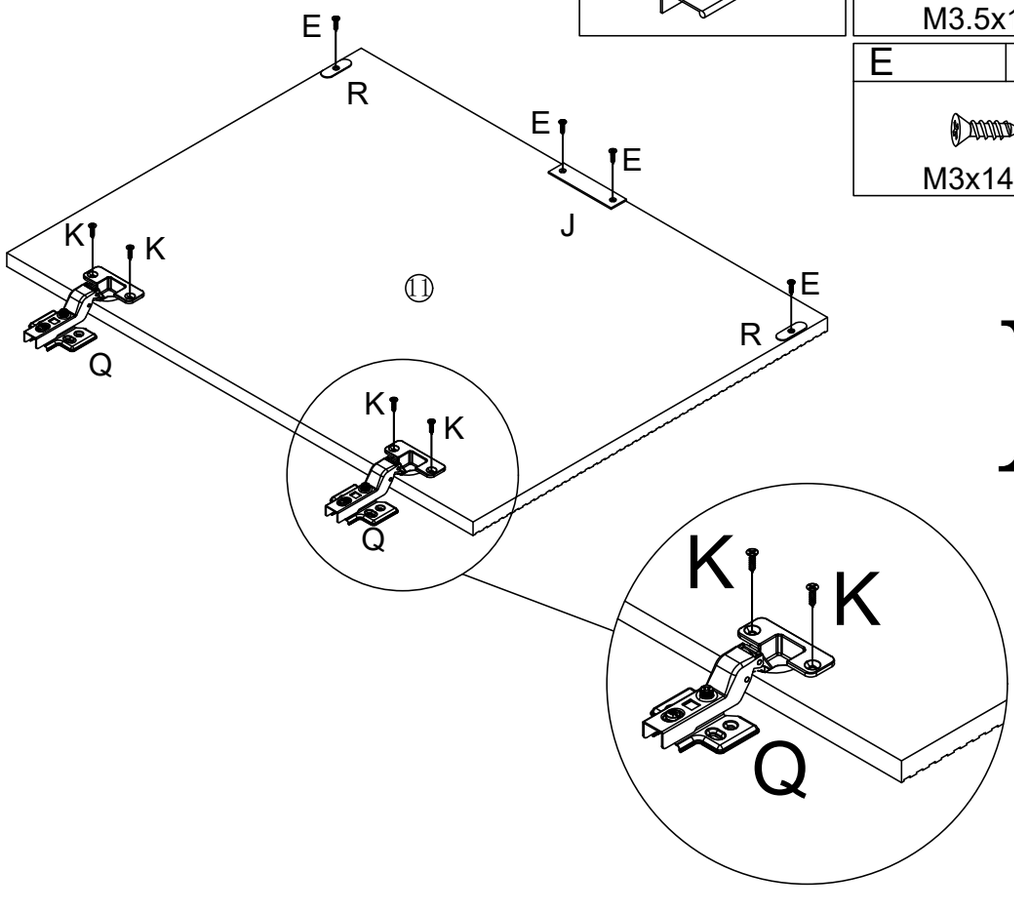

X3

16

K	×24
M3.5x14MM	

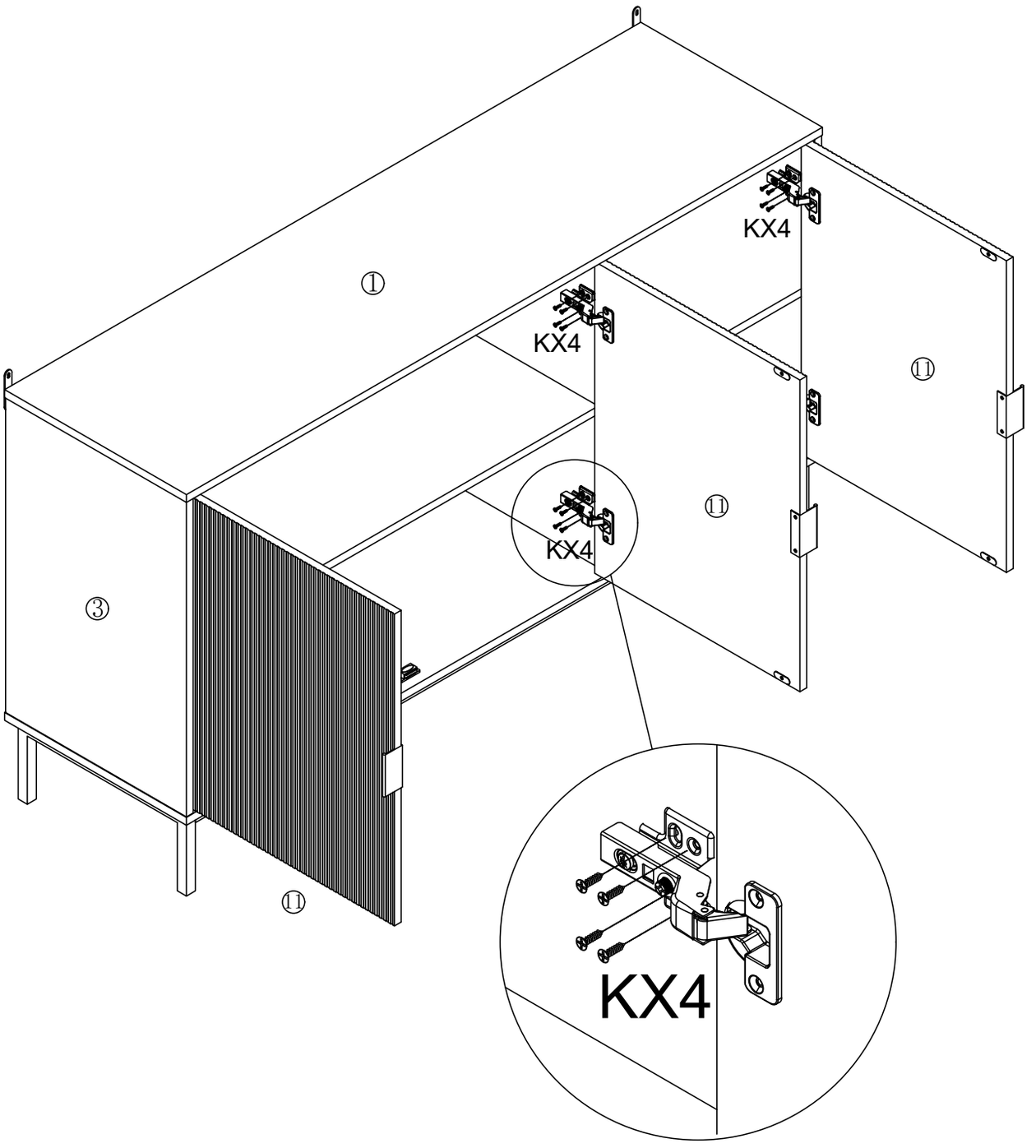

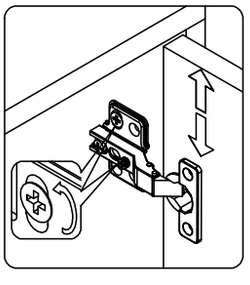

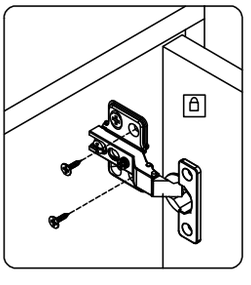

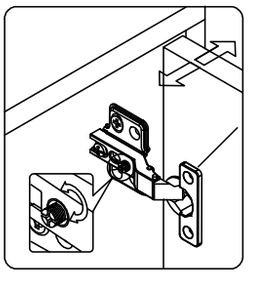

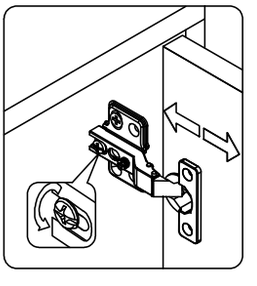

17

D	×2
M4x40MM	

P	×2

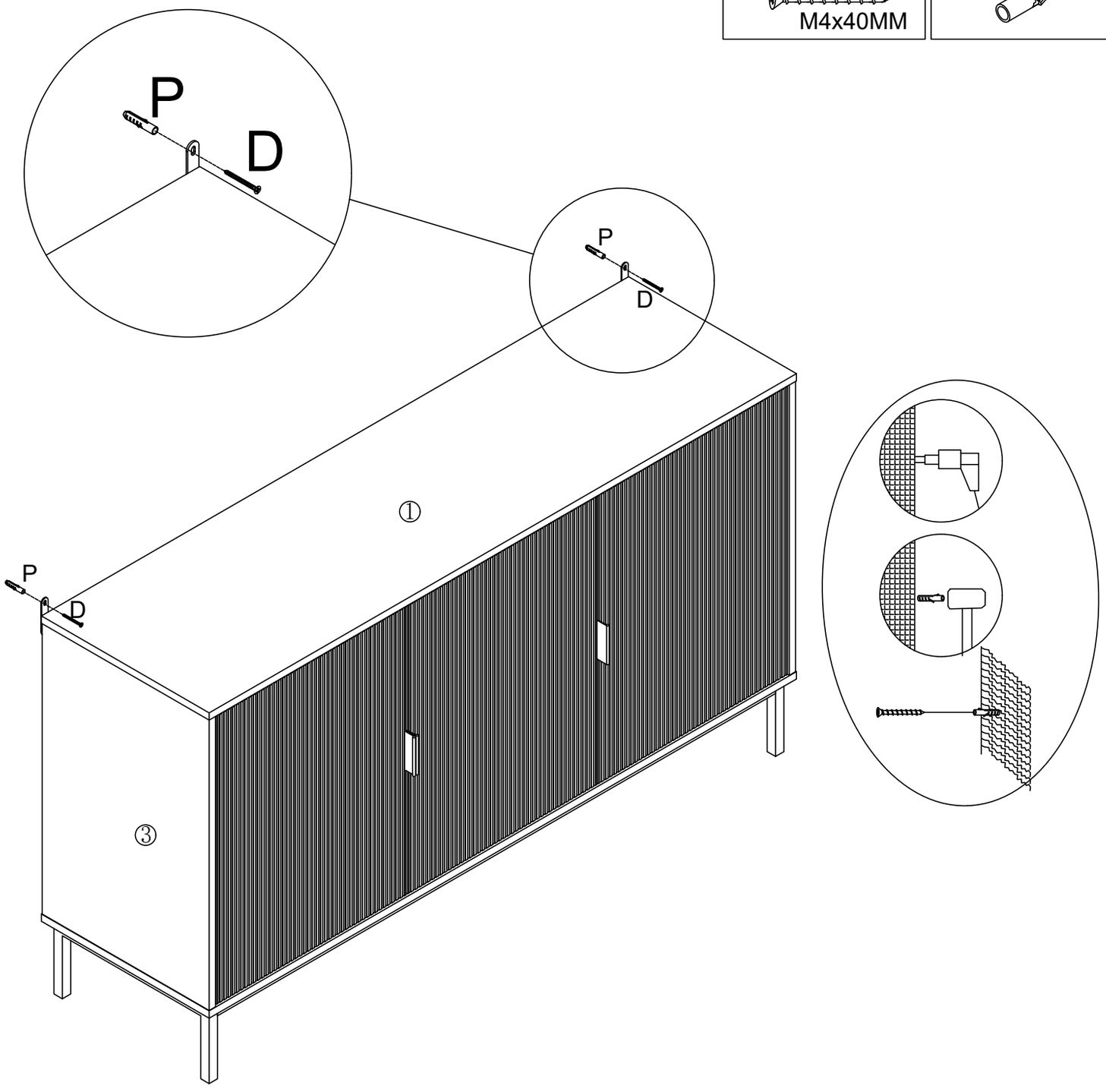

⑱

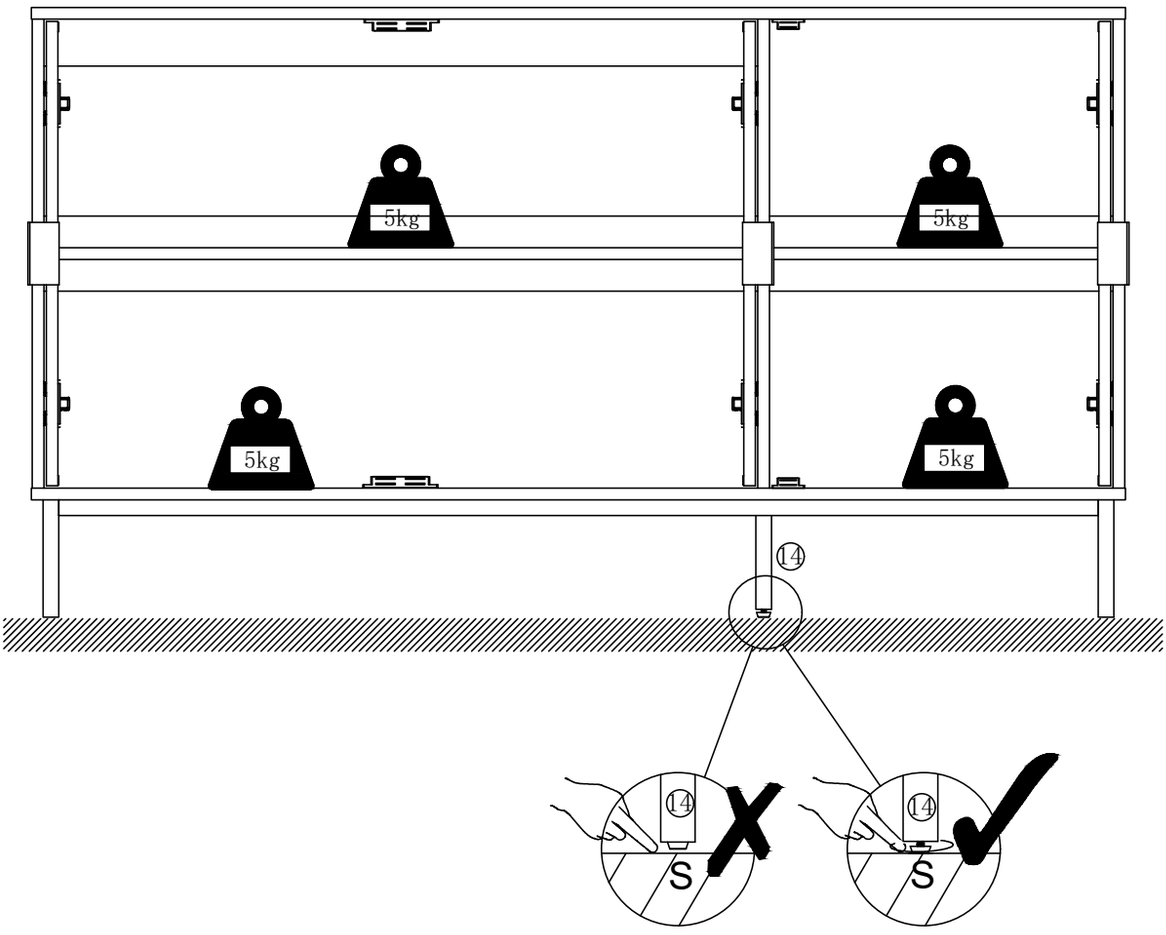

⑲

