27810046/01

27810046/02

27810046/03

27810046/04

BDSK Handels GmbH & Co. KG
Mergentheimer Straße 59
DE-97084 Würzburg
Germany

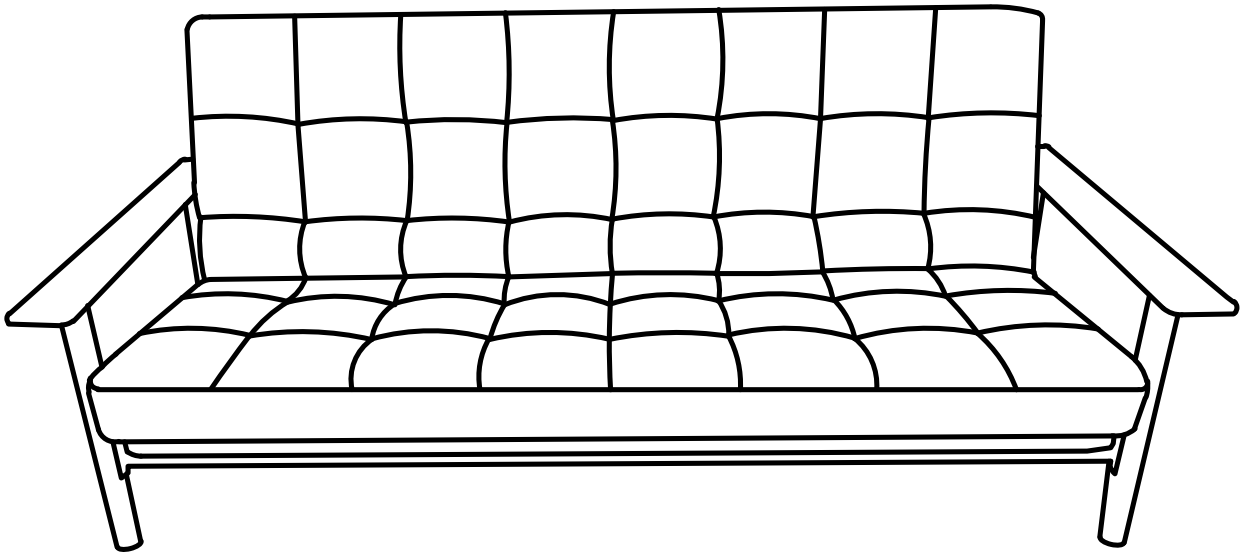

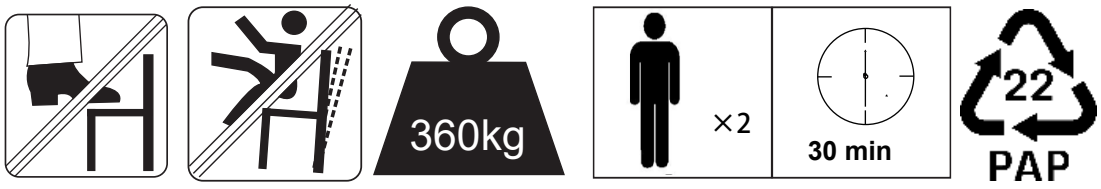

A x4	M x16	C x8	D x8	E x4	F x1
M8x40	M8x20	M8x25			

G x1	H x2	L x1	R x1	K x2	I x1

J x2	Y x4

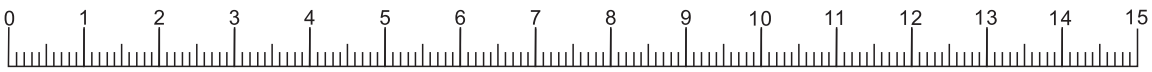

1

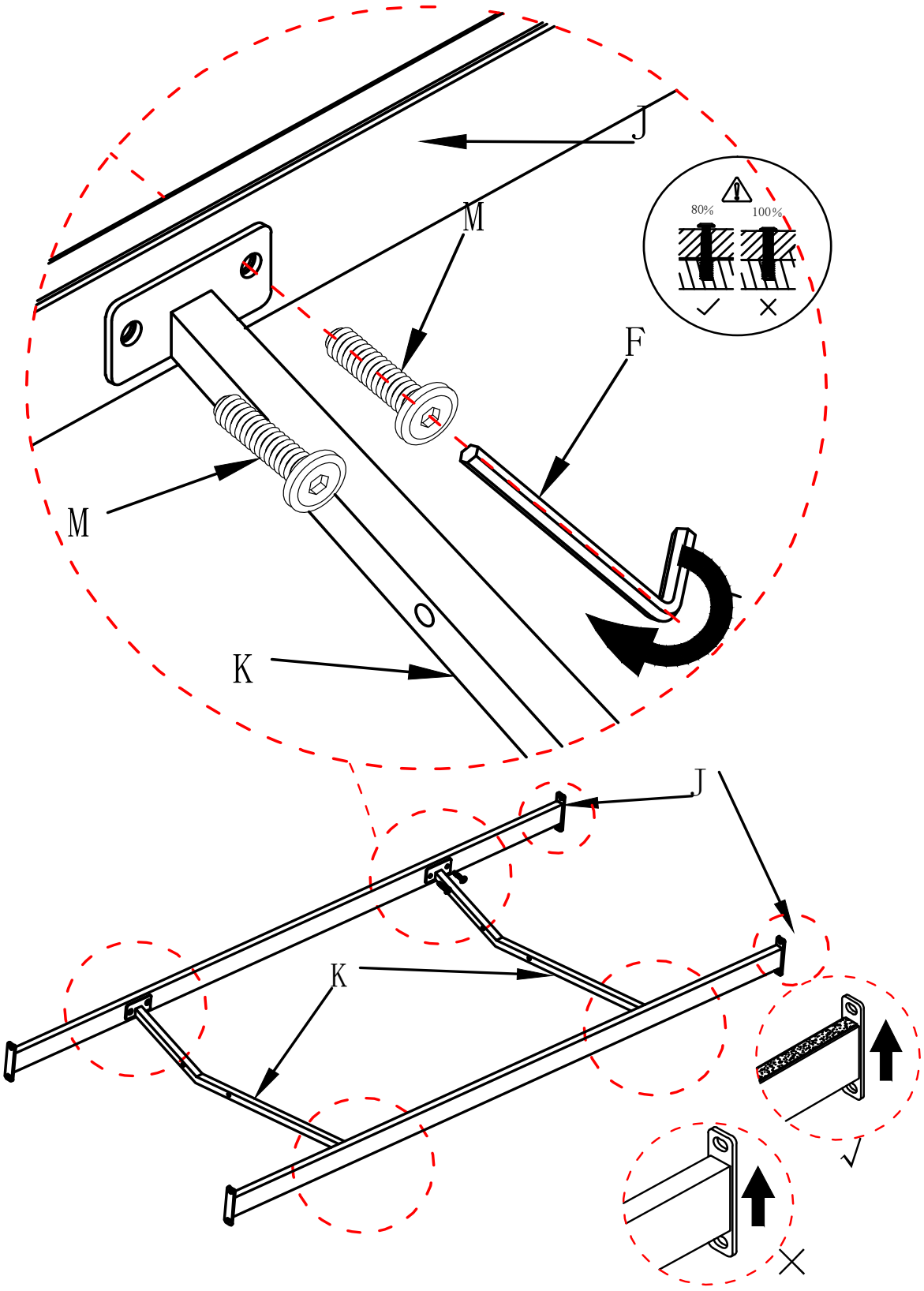

2

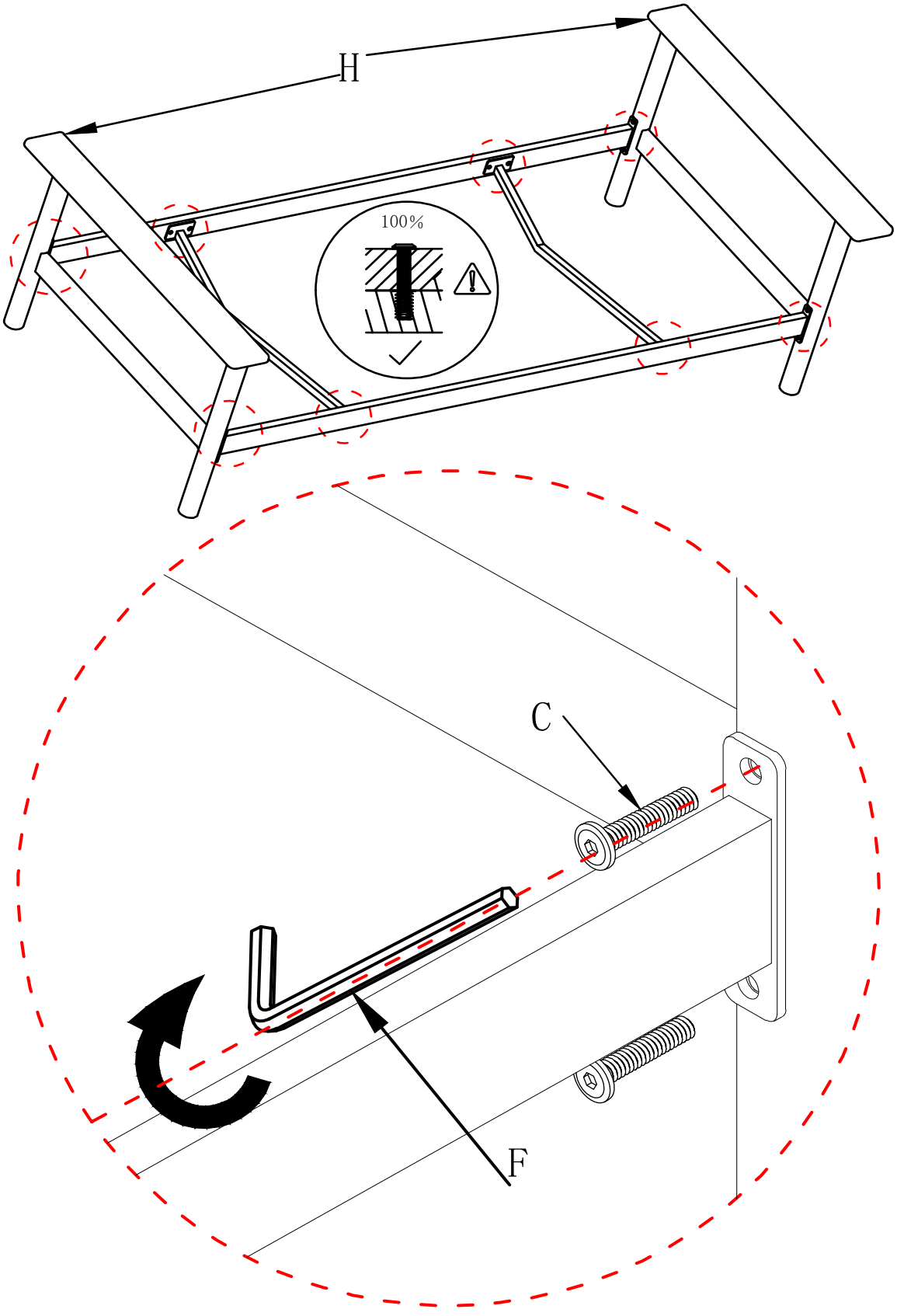

3

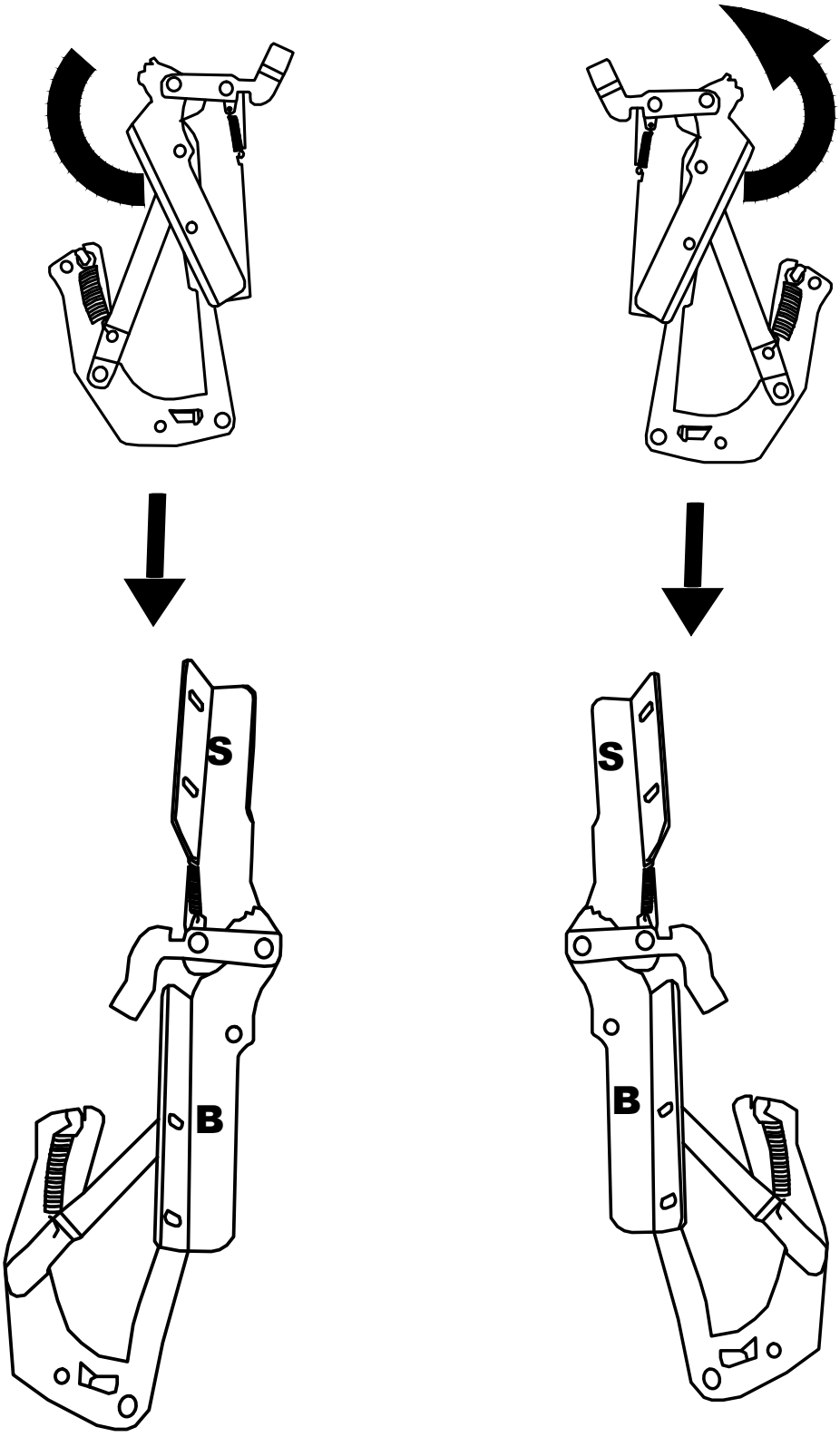

L

R

4

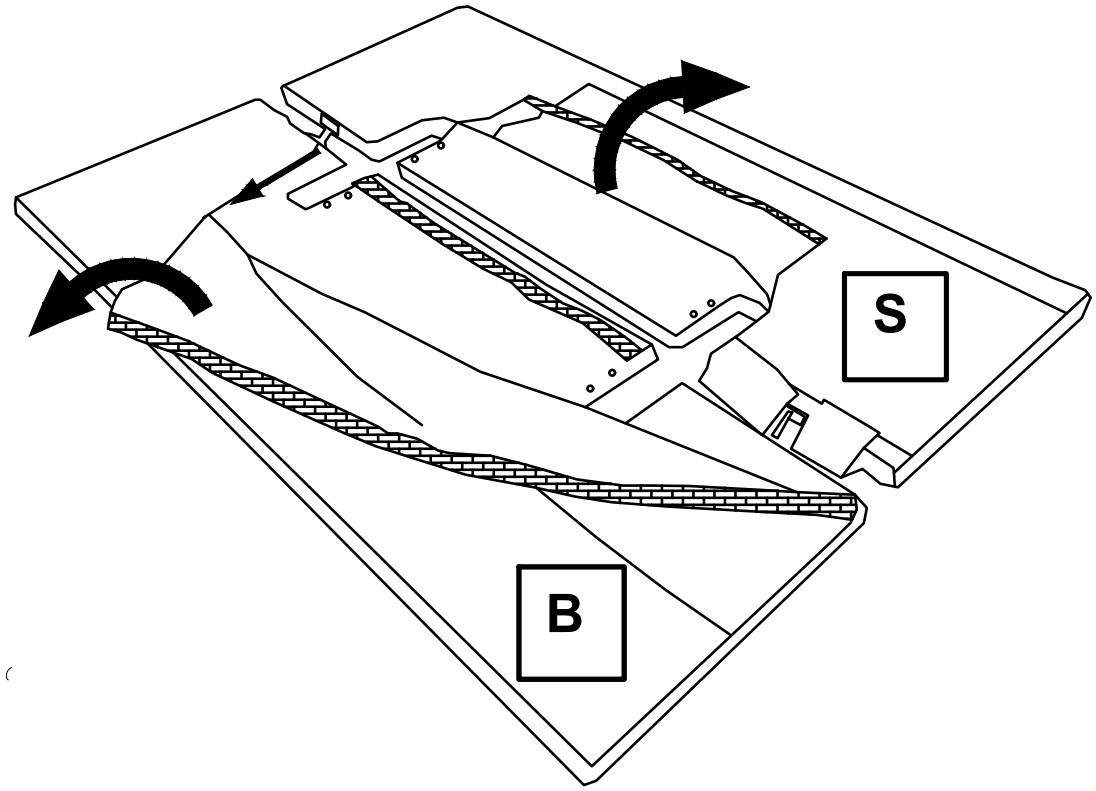

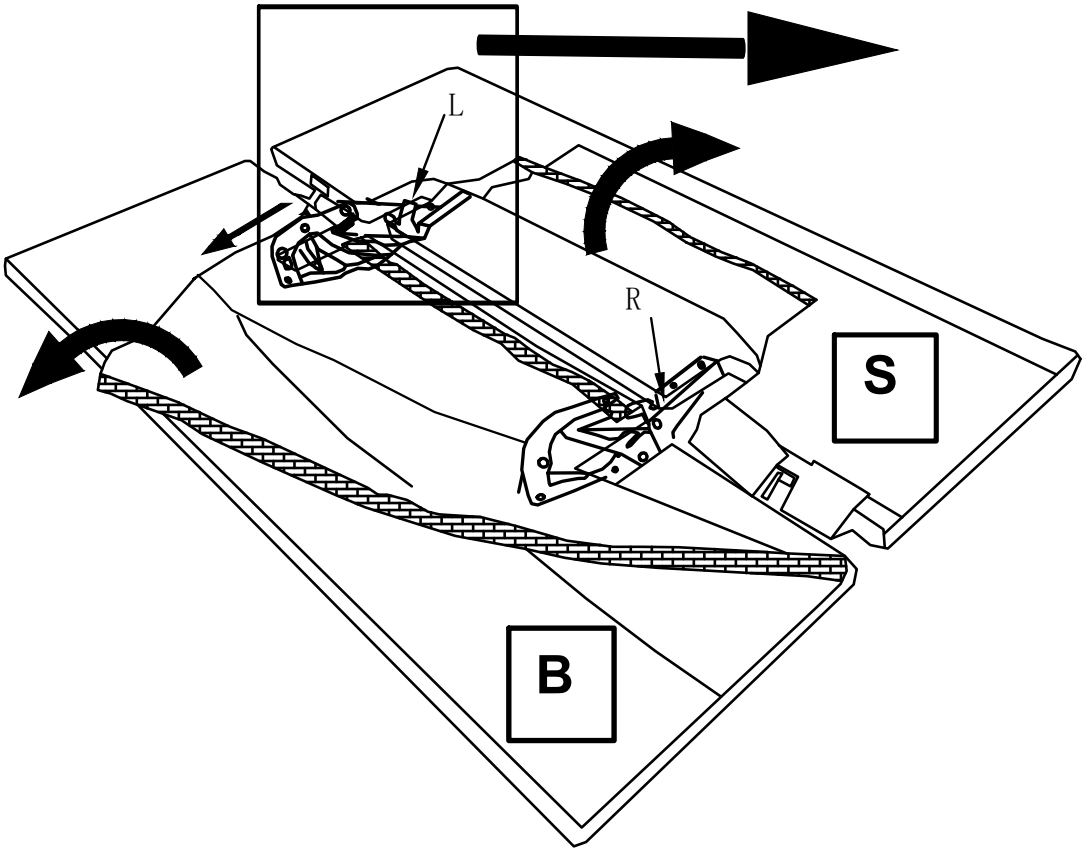

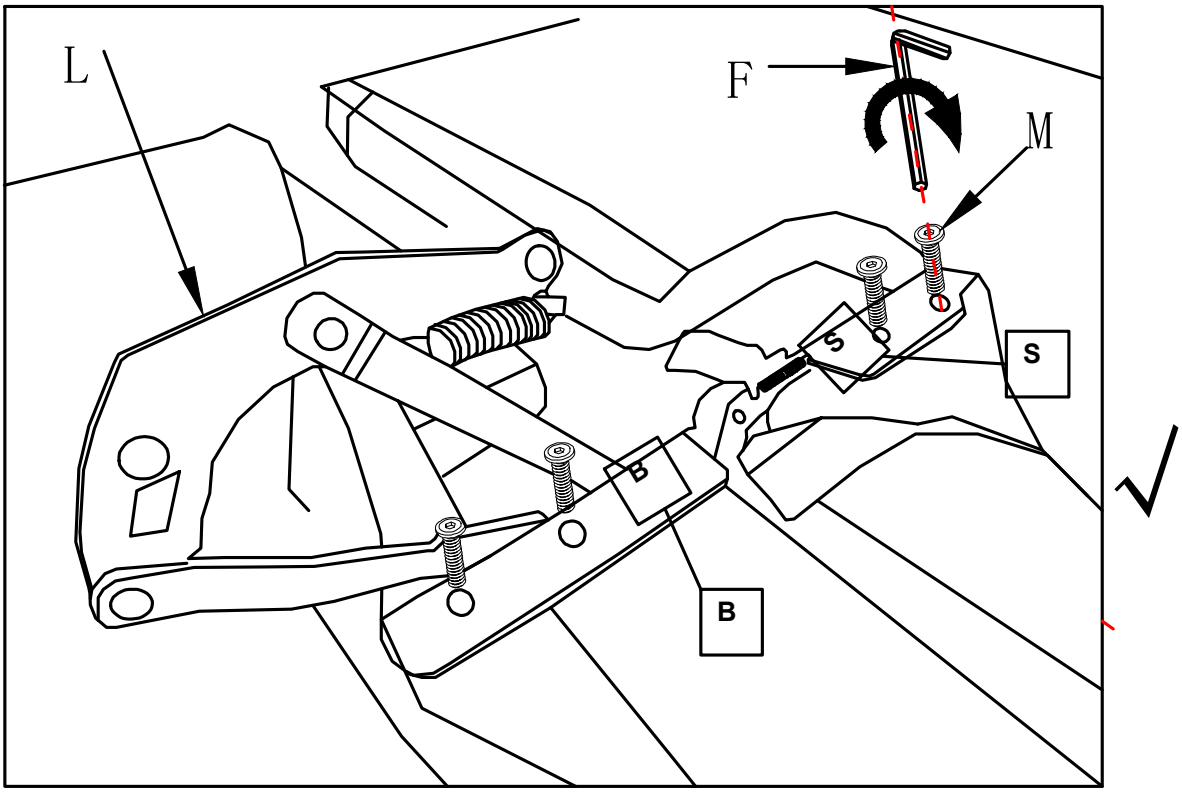
L
F
M
S
S
B
B

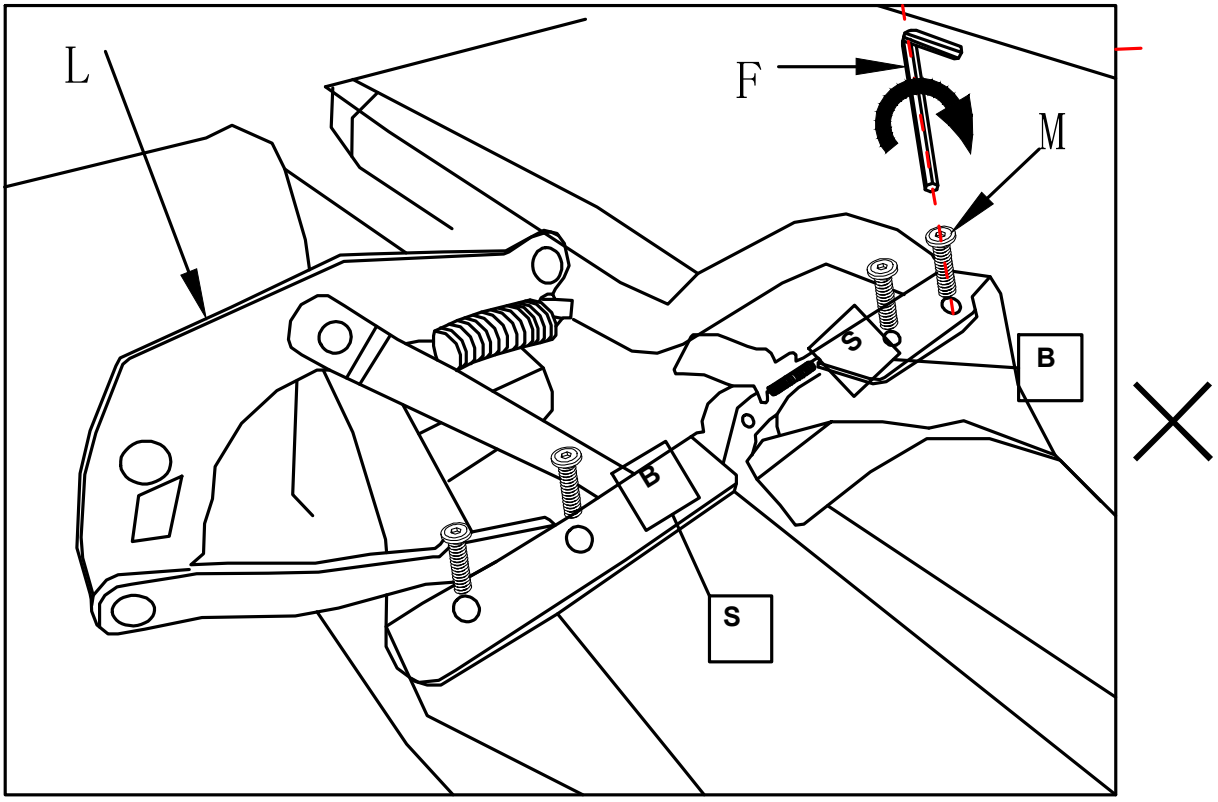
L
F
M
S
B
B
S

5

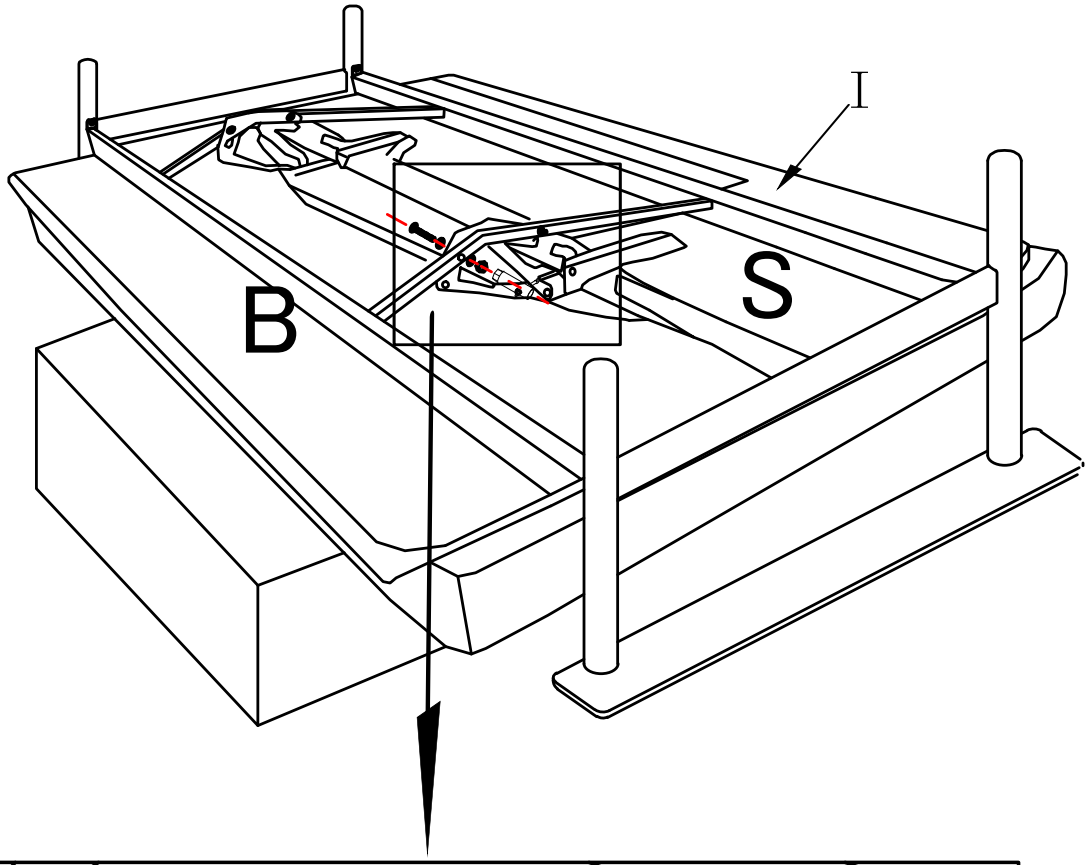

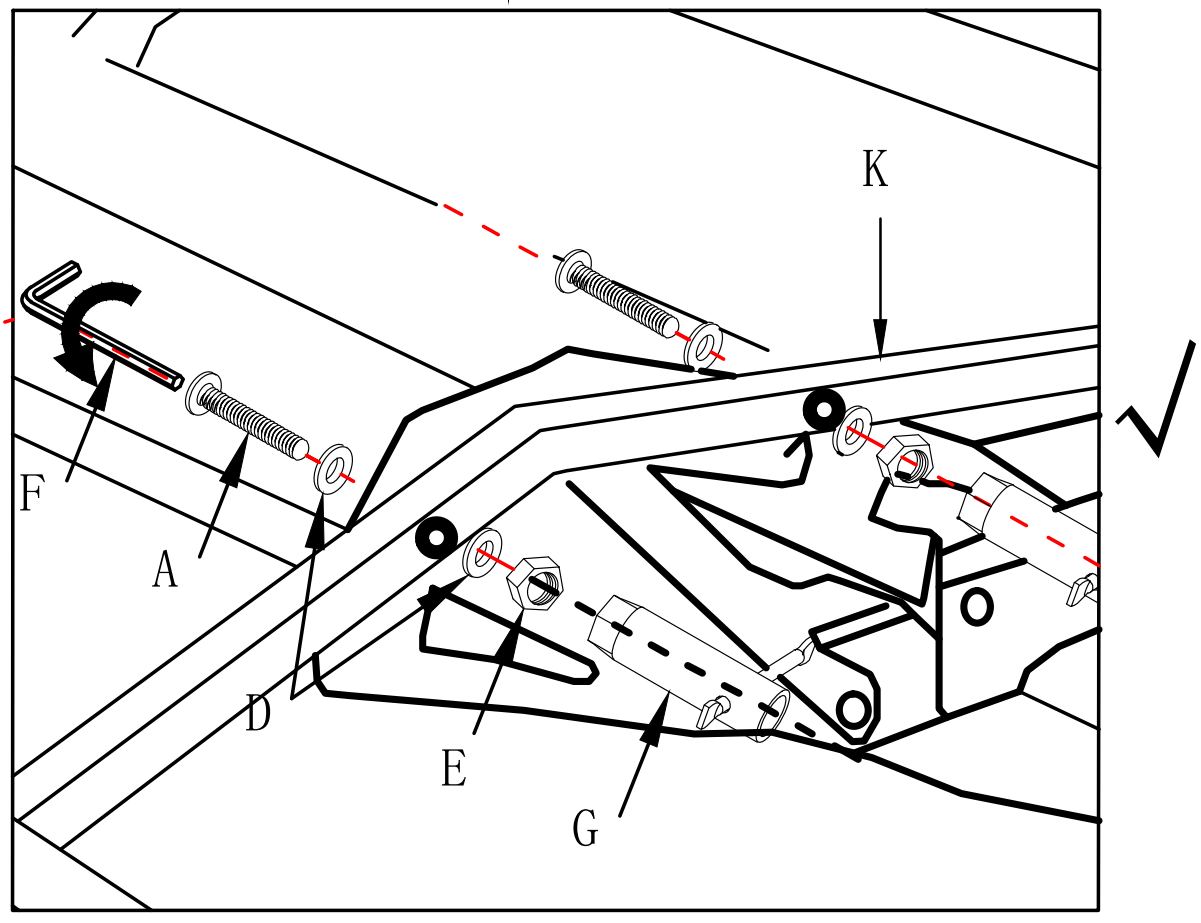

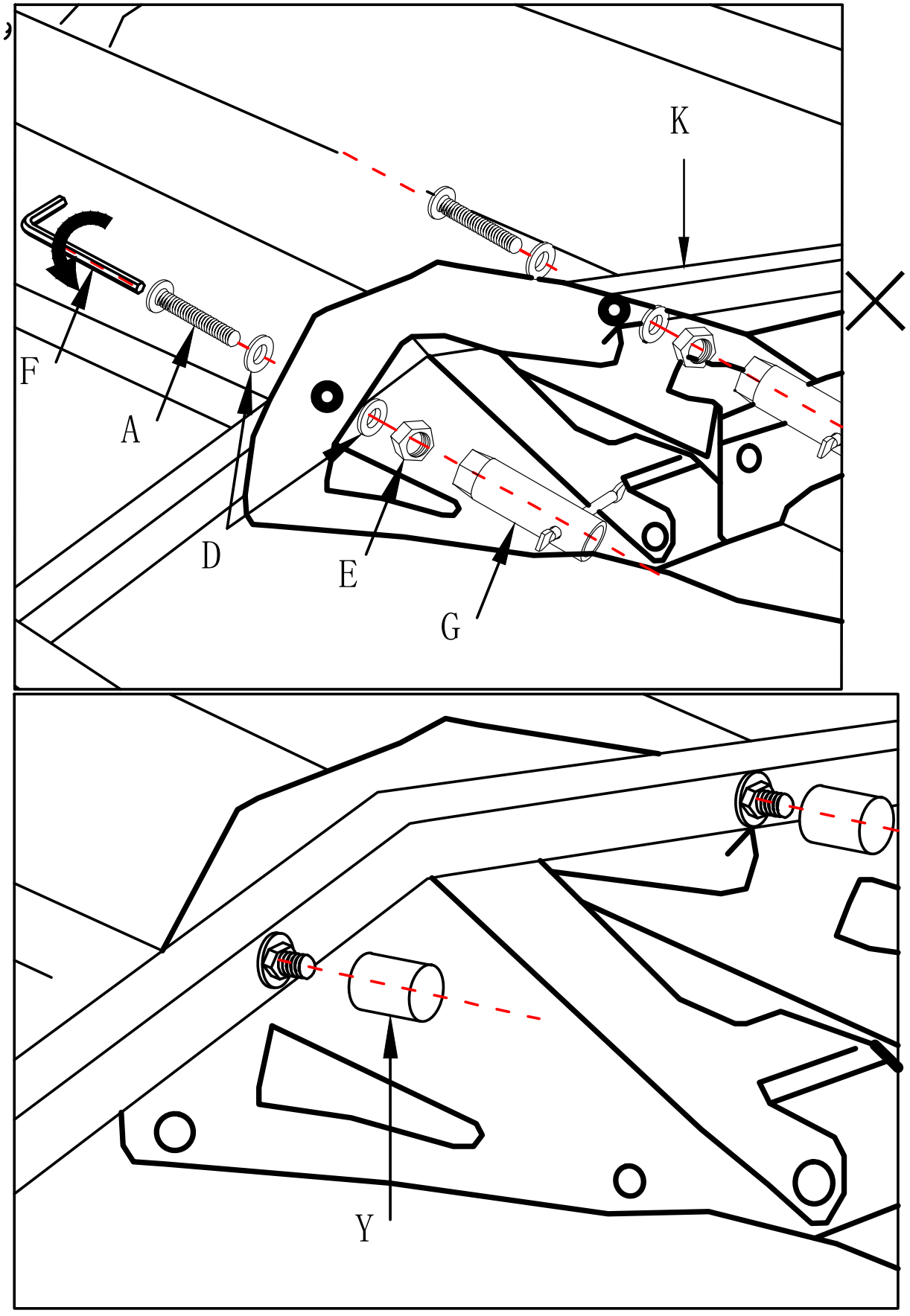
K
X
F
A
D
E
G
Y

6

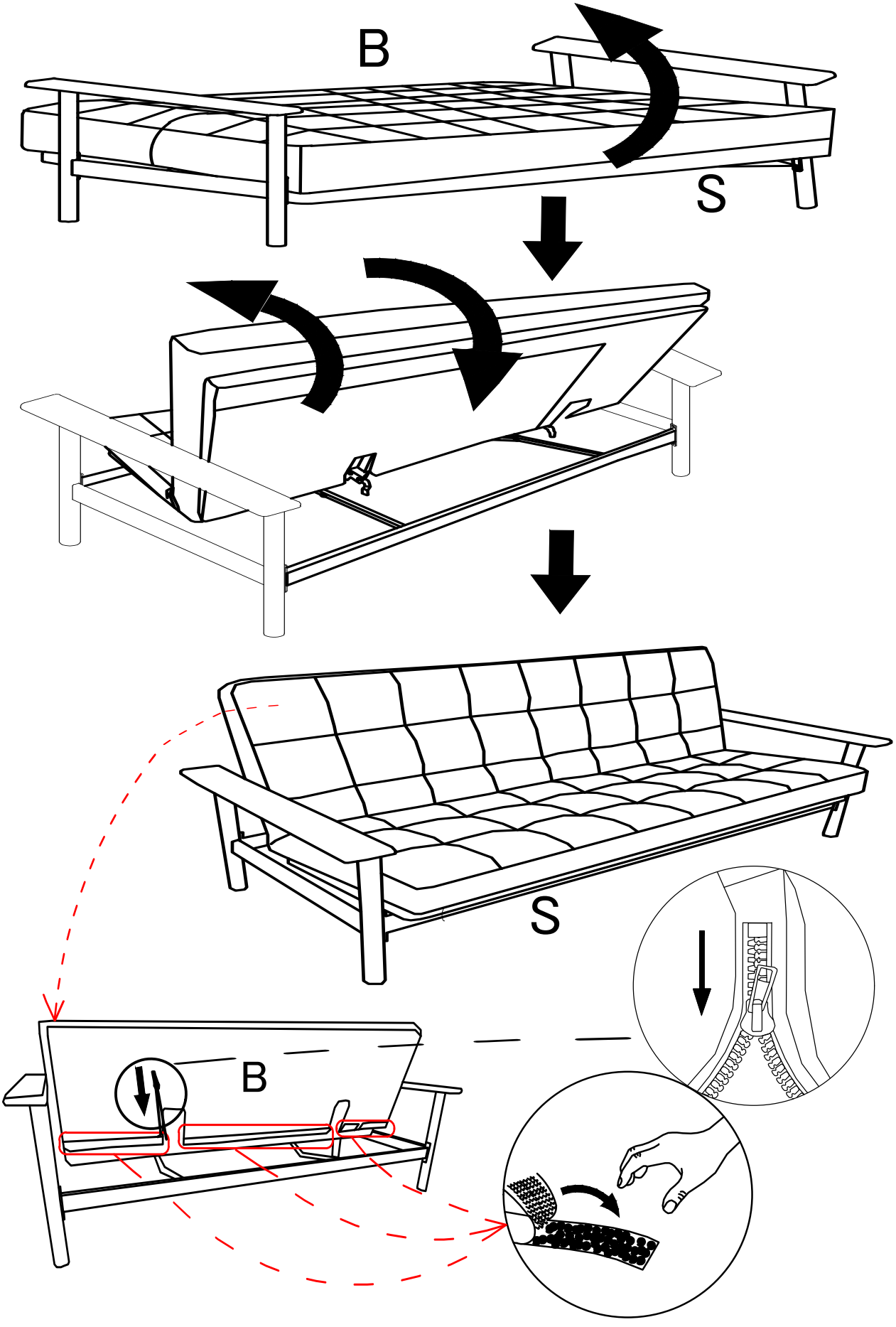

7

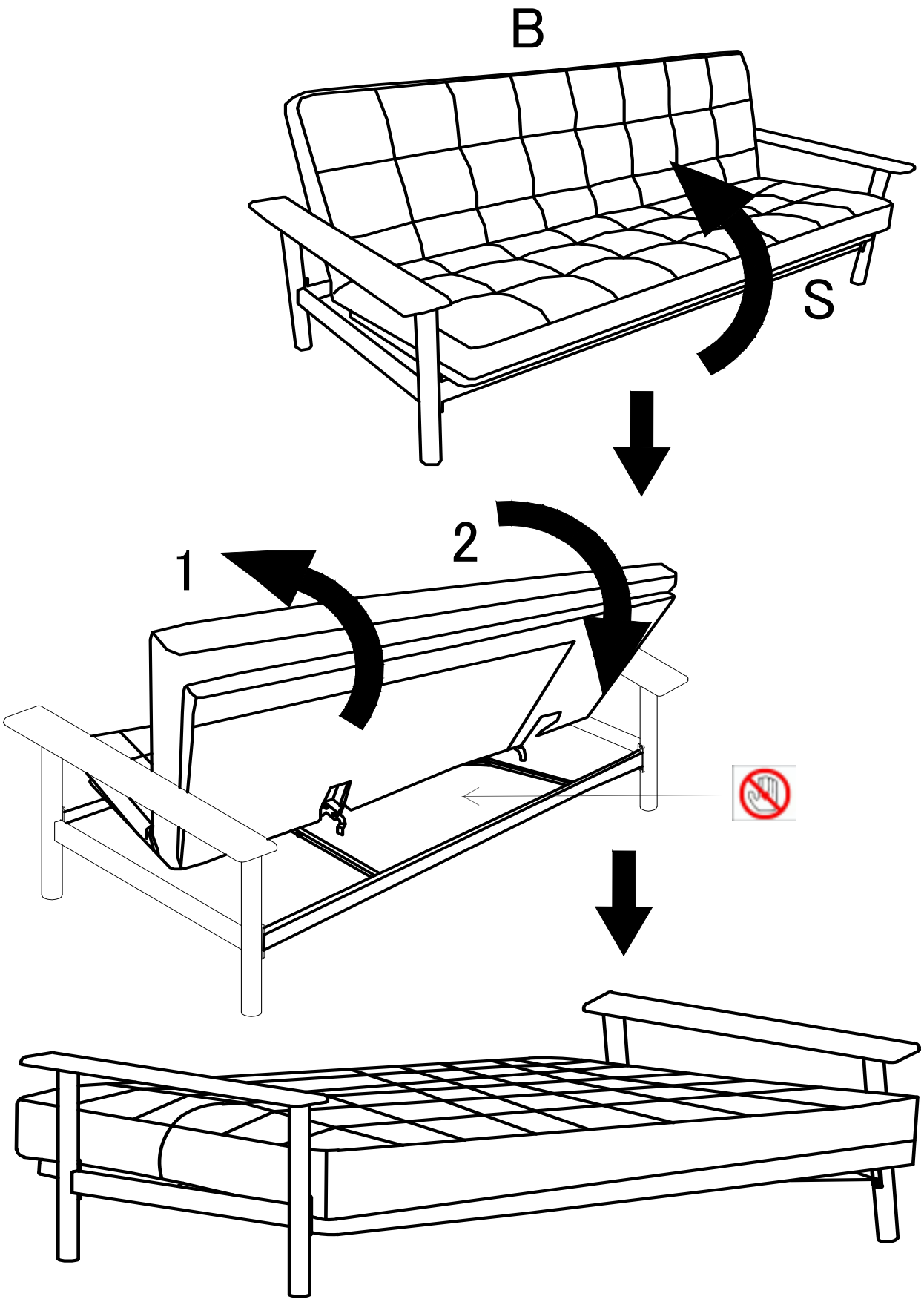

8

