05370073-01

BDSK Handels GmbH & Co. KG
Mergentheimer Straße 59
DE-97084 Würzburg

	❶ x2 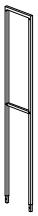	❷ x1 	❸ x1 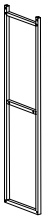	❹ x1 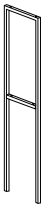
	❺ x2 	❻ x2 	❼ x2	❽ x1 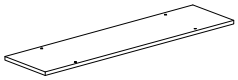
❾ x1 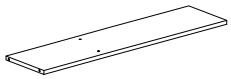	❿ x1 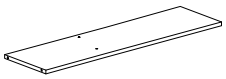	⓫ x1 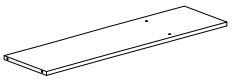	⓬ x1 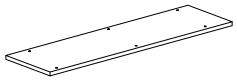	⓭ x1 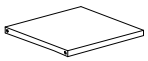

Ⓐ x8  M6*10	Ⓑ x16  M6*30	Ⓒ x12  M6*22	Ⓓ x16  M5*45
Ⓔ x4 	Ⓕ x1 	Ⓖ x2 	

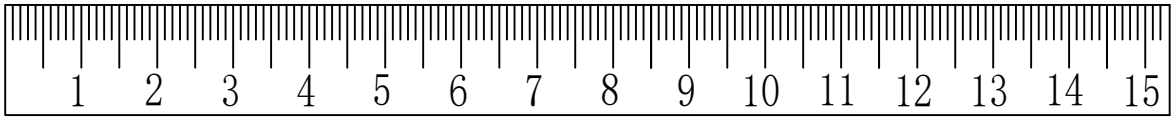

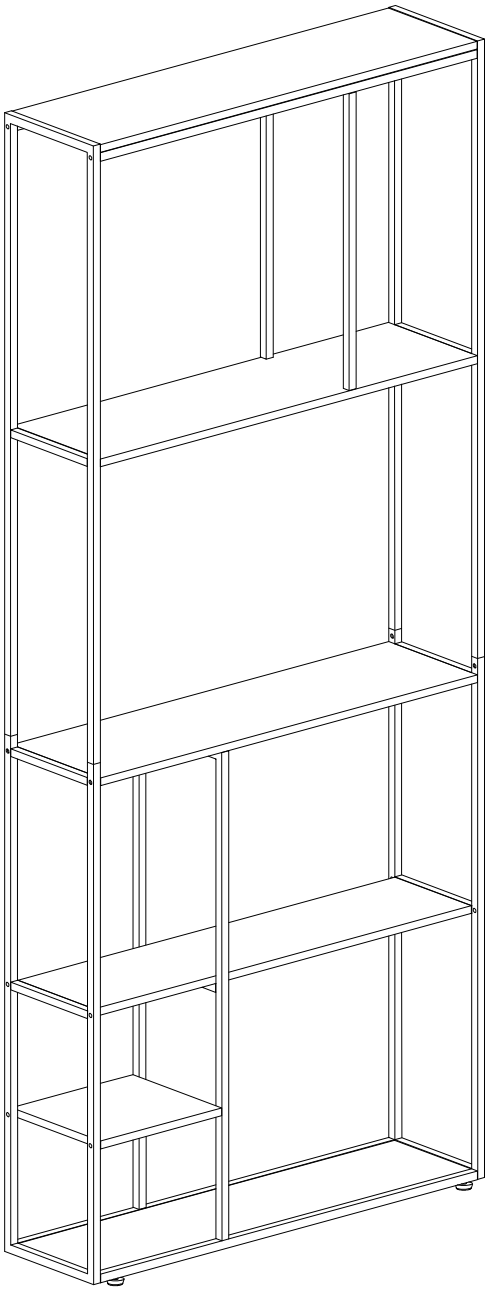

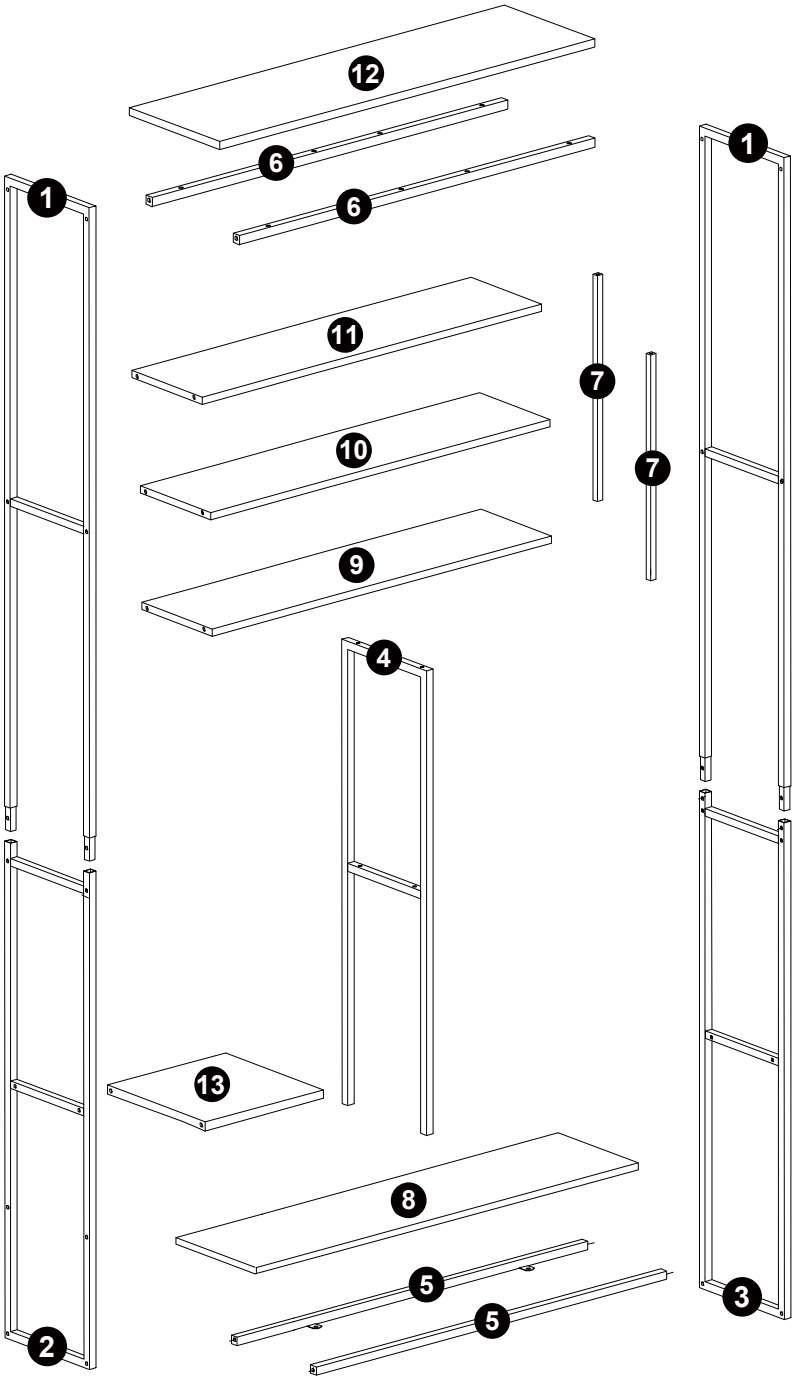
12
6
6
1
1
11
7
7
10
9
4
13
8
5
5
2
3

01

A x4



M6*10

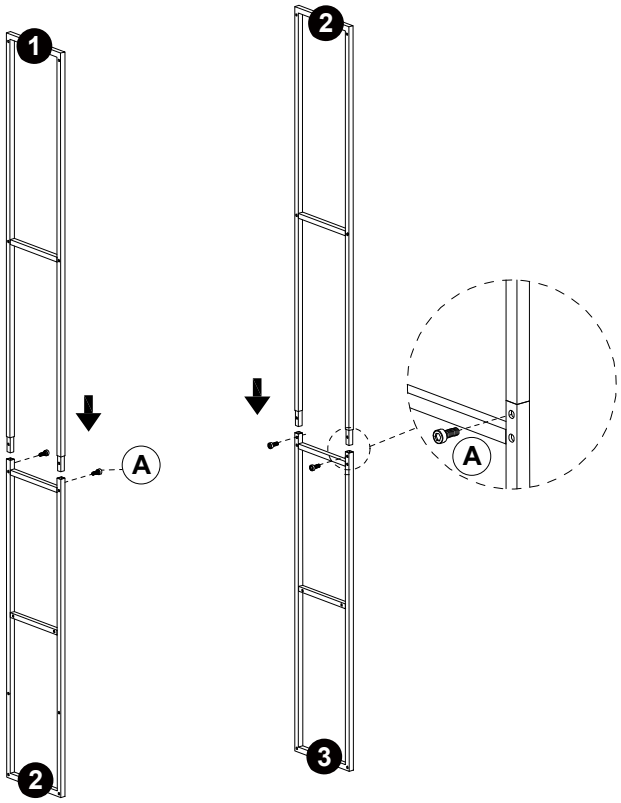

02

B x4



M6*30

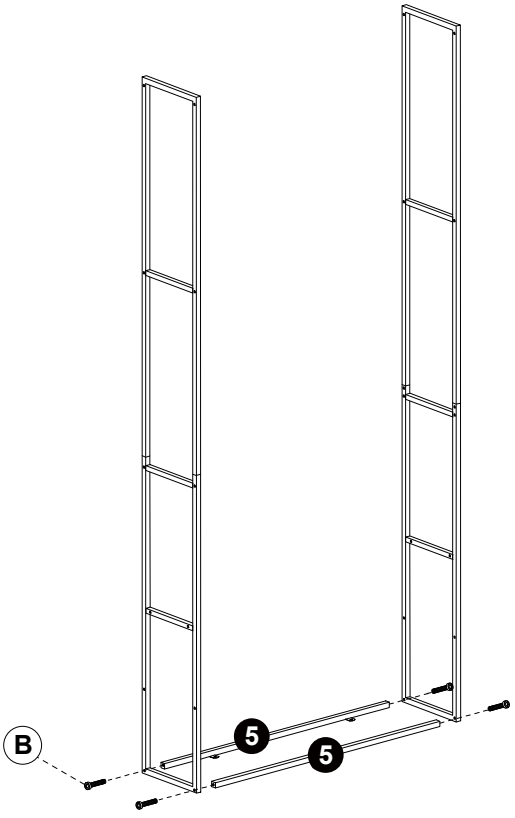

03

A x4



M6*10

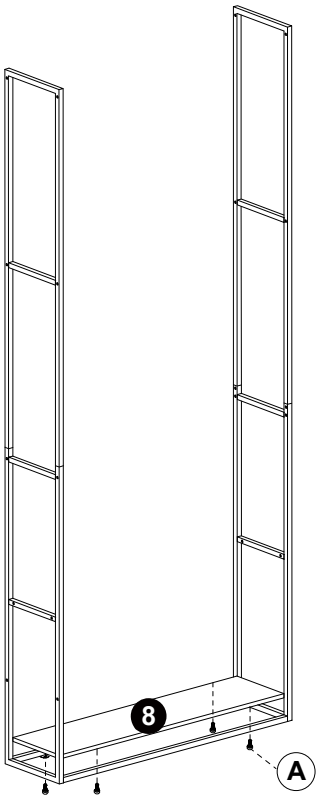

04

B x2



M6*30

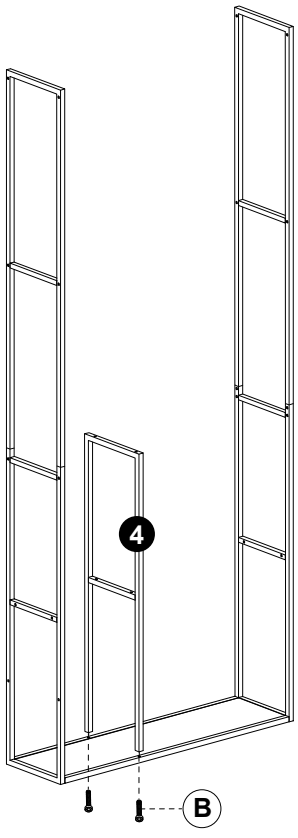

05

C x4



M6*22

D x16



M5*45

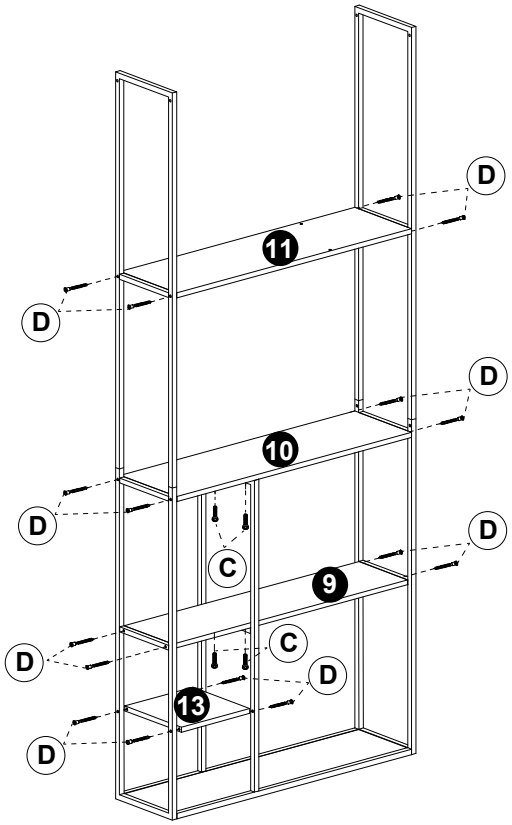

06

C x2



M6*22

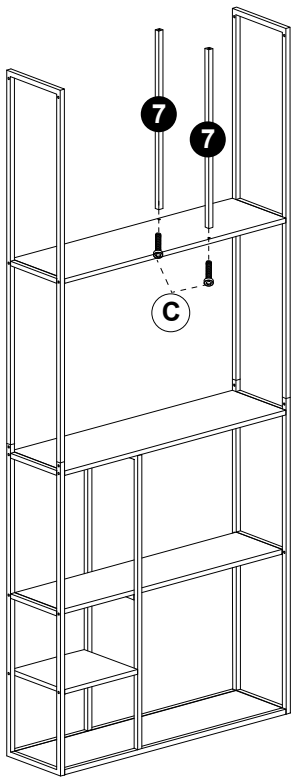

07

B x6



M6*30

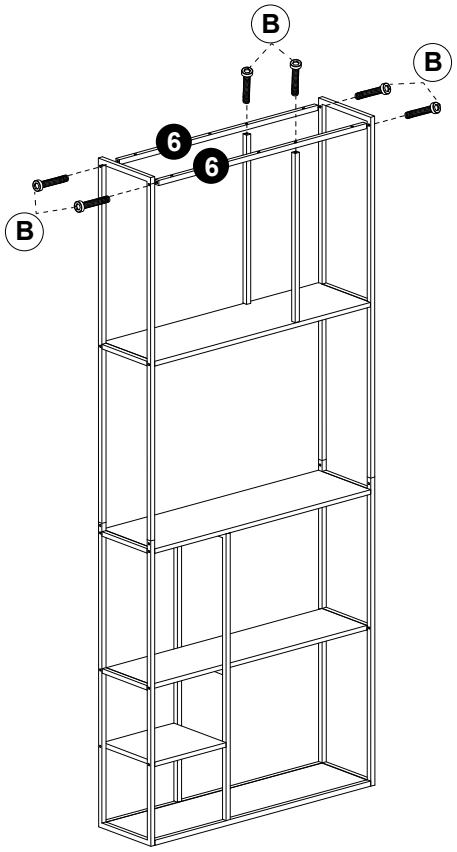

08

C x6



M6*22

E x4



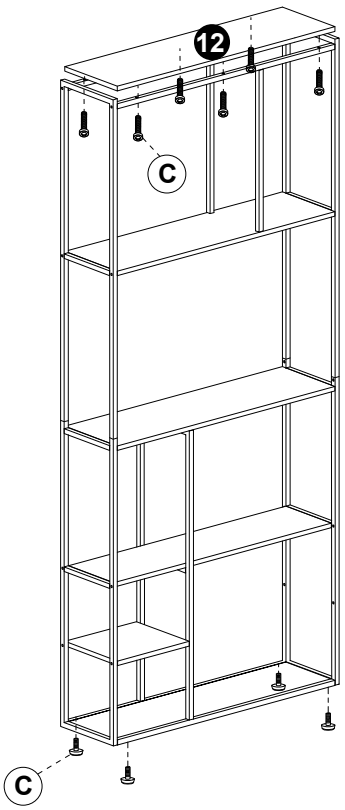

09



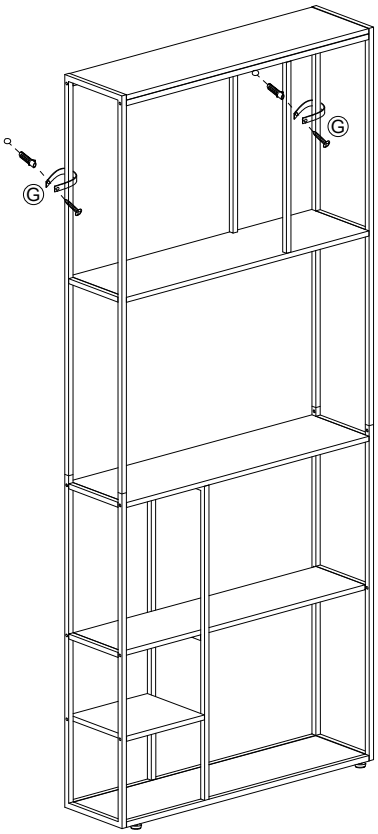



10

