MELBOURNE

ASSEMBLY INSTRUCTION

COFFEE TABLE
ART. NO. – 74123
52X53X45 CM

ASSEMBLY INSTRUCTIONS

A	B	C
6x	6x	1x
M 8X20MM	20X8MM	

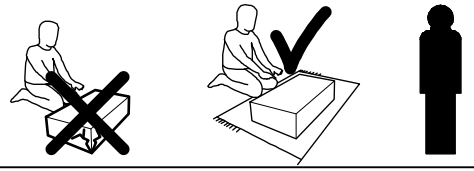

1 X

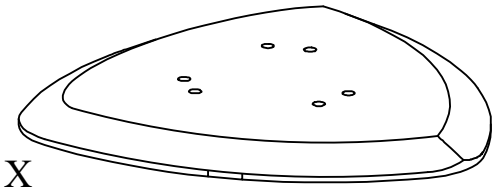

3 X

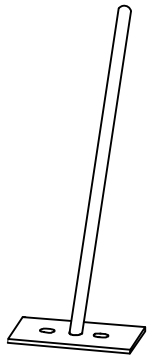

HARDWARE



1

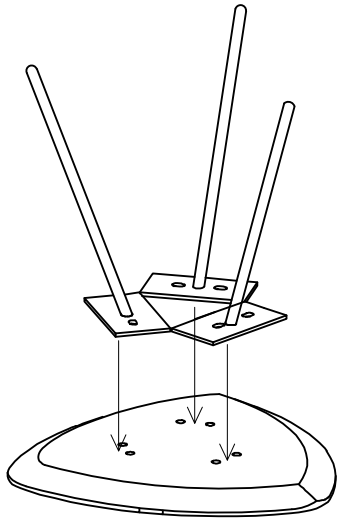

2

6X

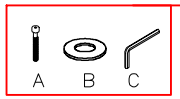

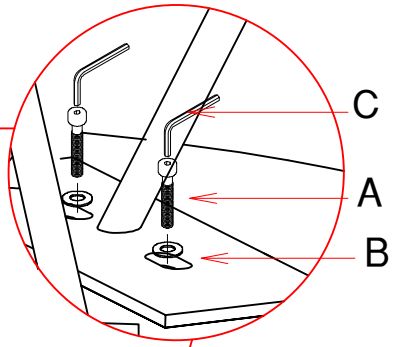

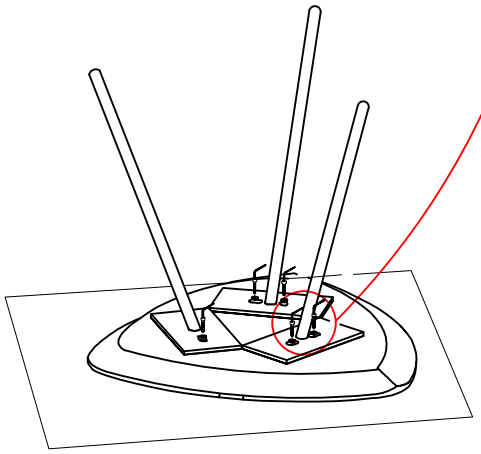

3

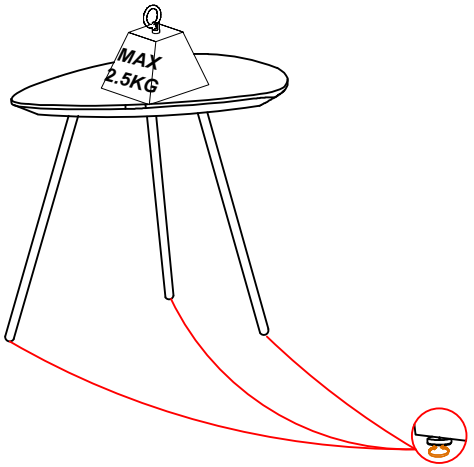

ADJUSTABLE
SLIDING NAILS

