17130026-01
HIGHBOARD

BDSK Handels GmbH & Co.KG
Mergentheimer Straße 59
DE-97084 Würzburg
E-Mail:Info@xxxlutz.at

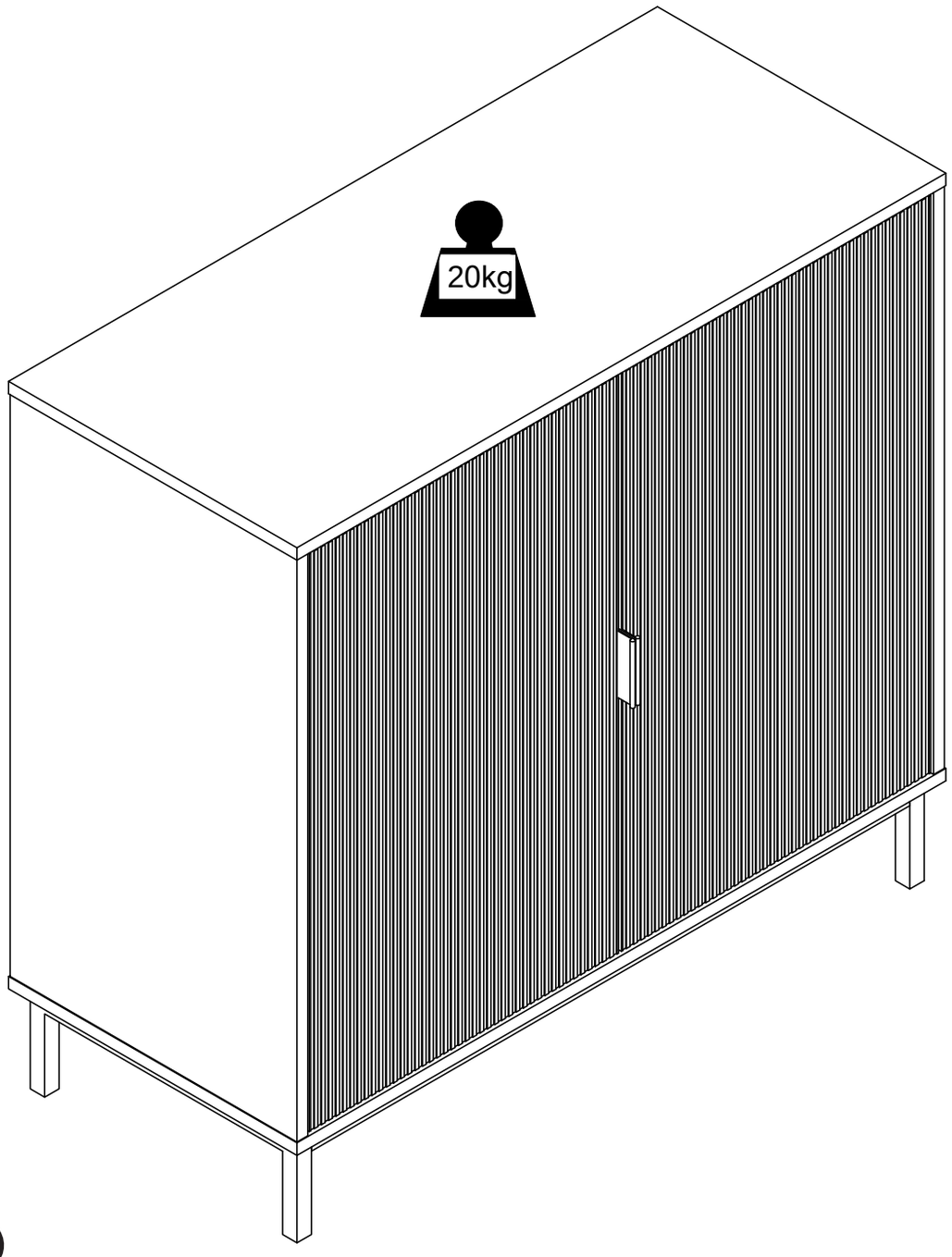

22
PAP

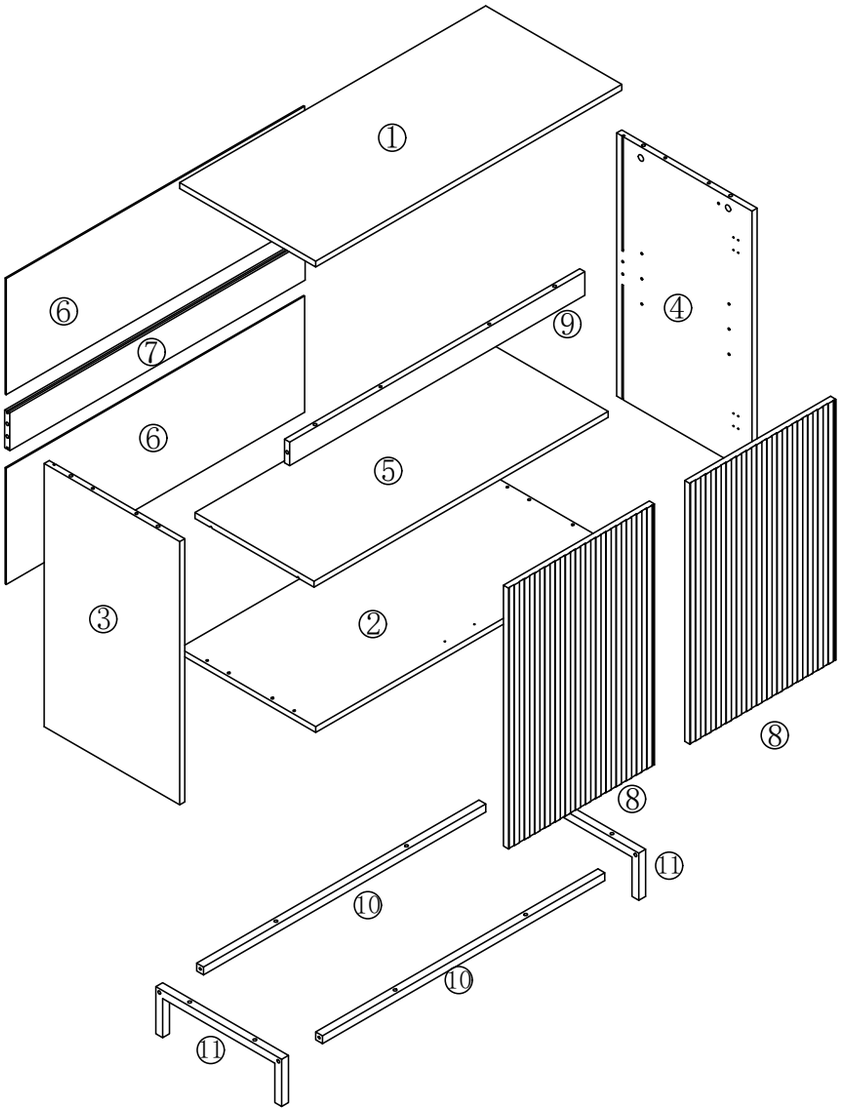

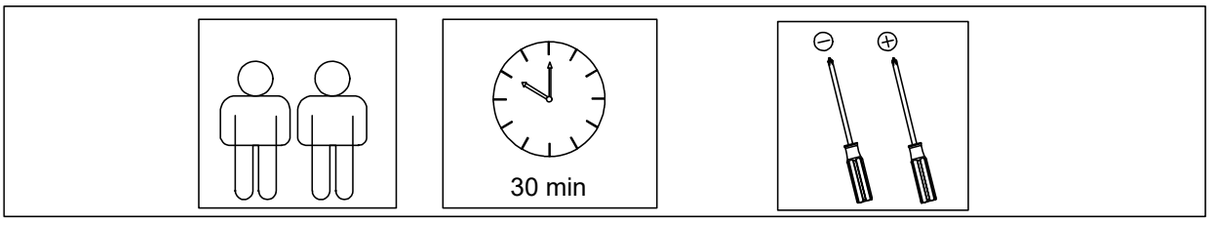

A ×12	B ×12	C ×10	D ×6	E ×12	F ×8	G ×4
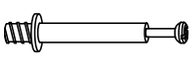		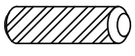	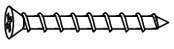			
M6x35MM	φ15x10	Φ6x30	M4x40MM	M3x14MM	M6x30MM	M6x40MM

H ×1	I ×4	J ×2	K ×38	L ×8	M ×4	N ×2
		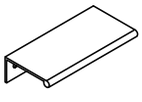		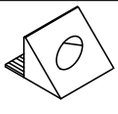		
			M3.5x14MM			

O ×2	P ×2	Q ×4	R ×4
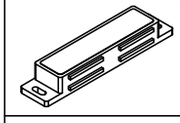			

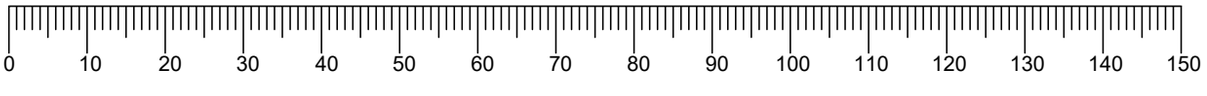

①

A	×12
M6x35MM	

E	×4
M3x14MM	

O	×2

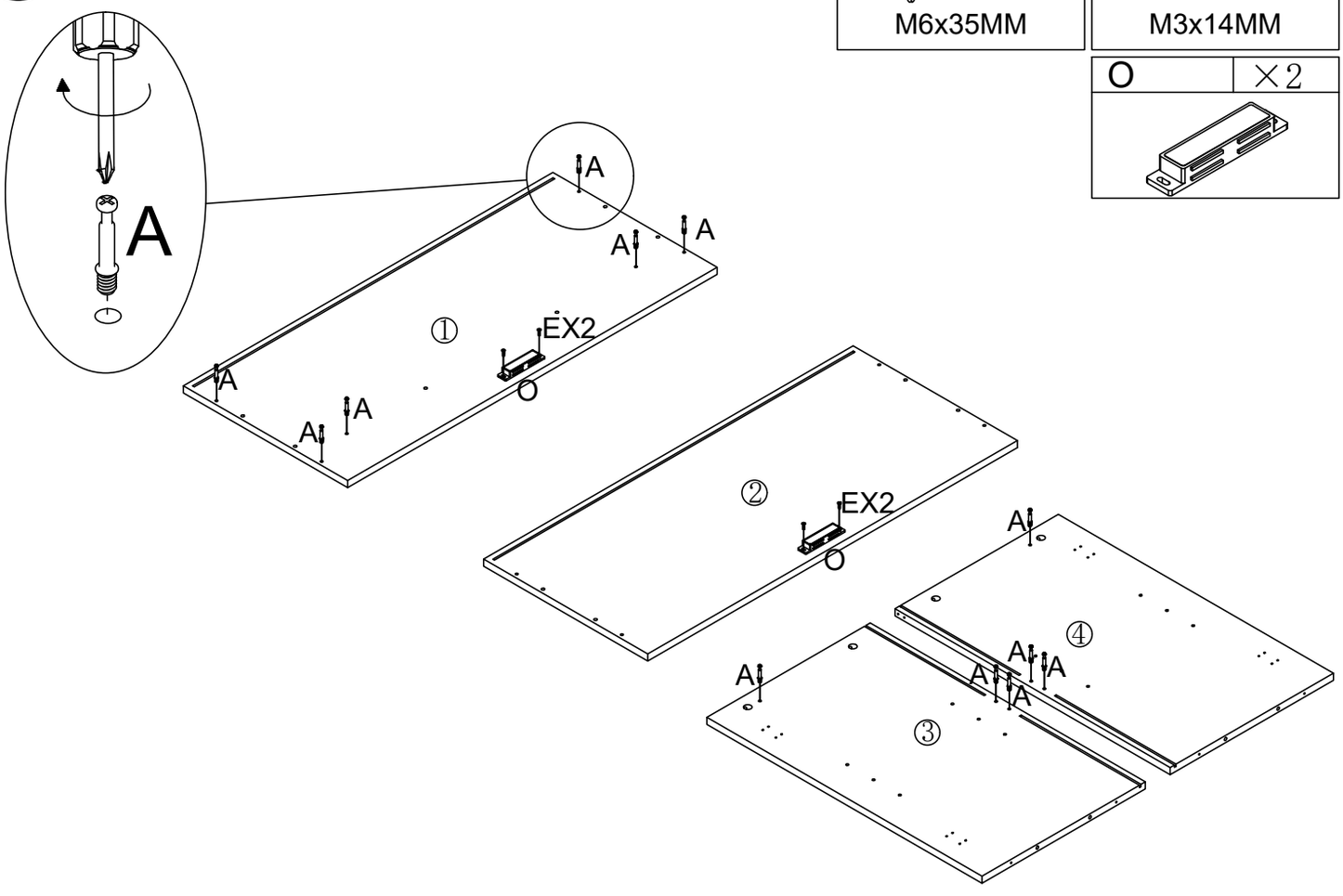

②

B	×6
φ15x10	

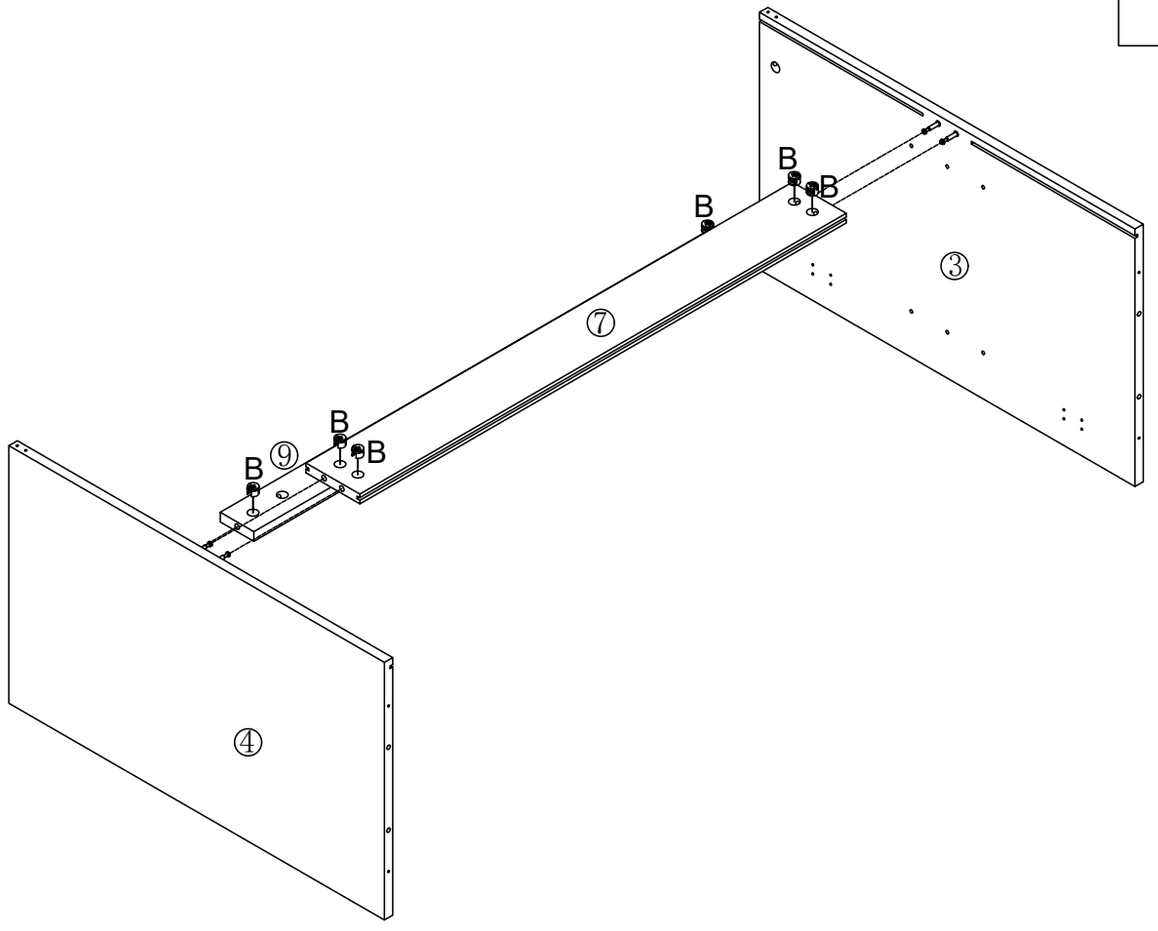

③

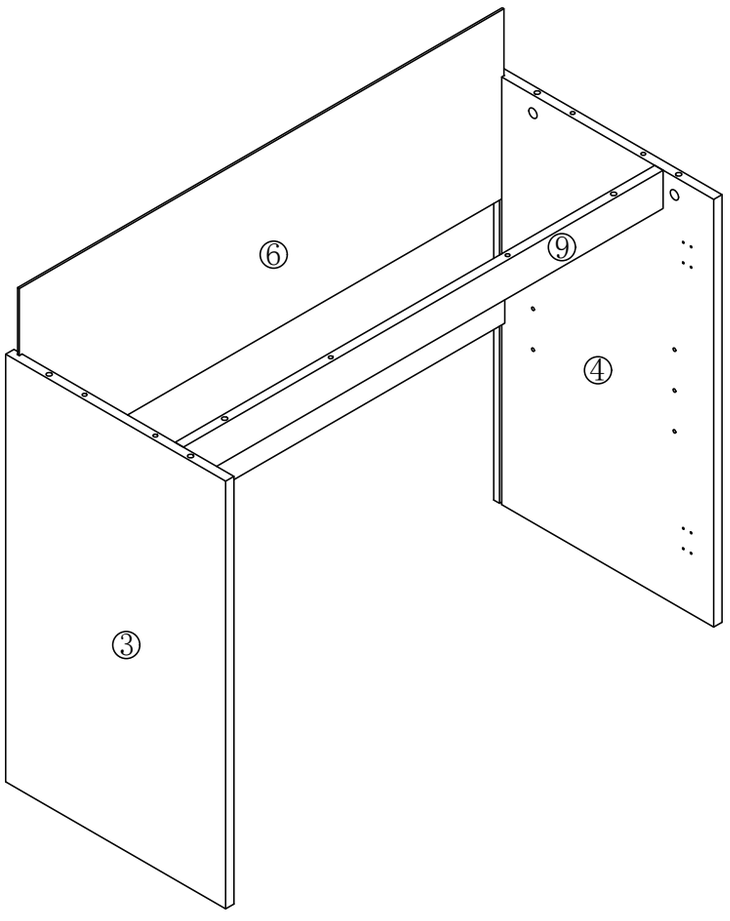

---

④

B	×6
φ15x9	

C	×6
φ6x30	

I	×4

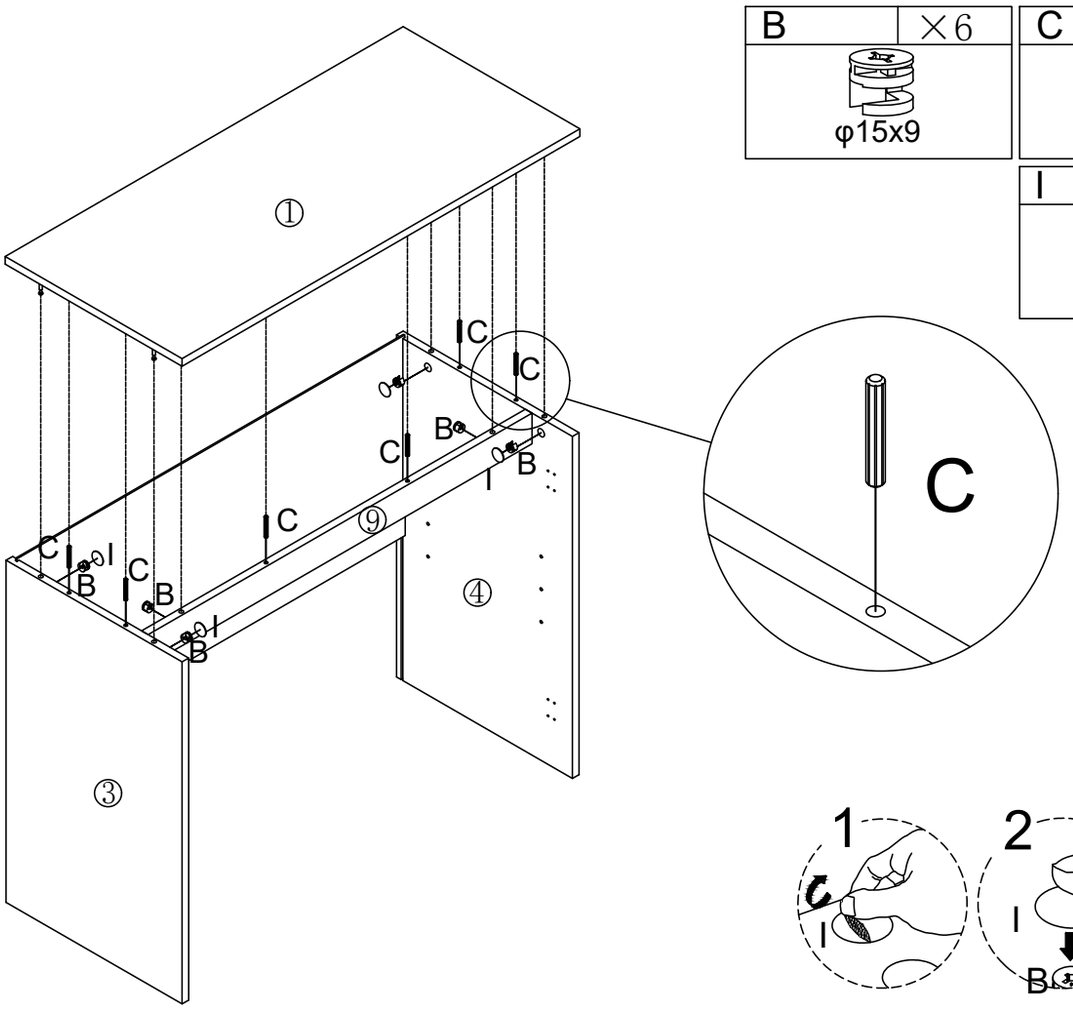

5

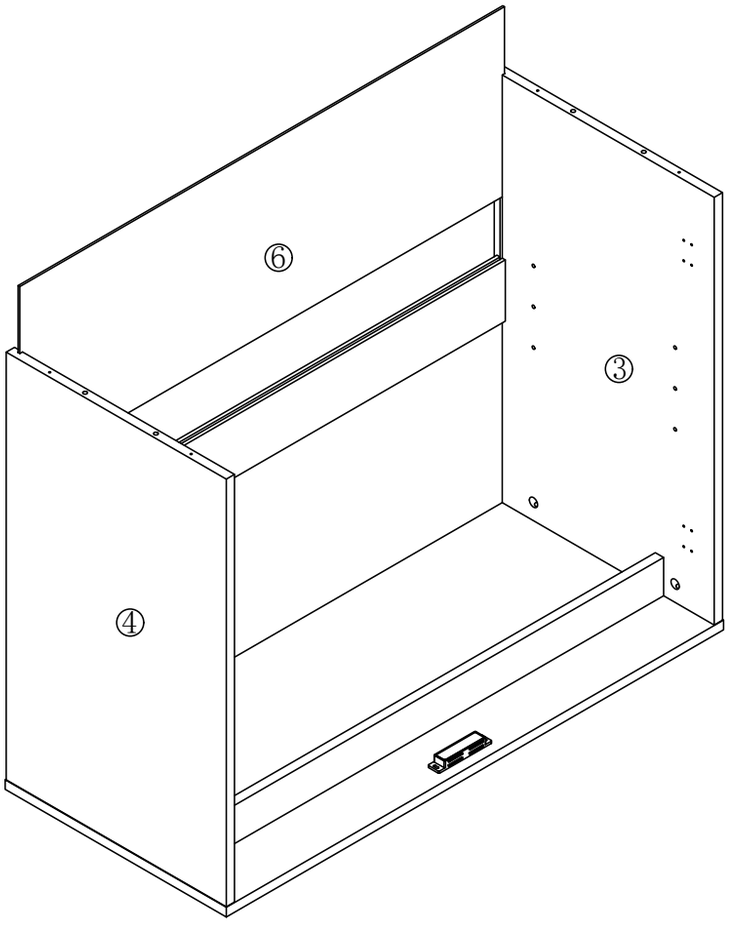

6

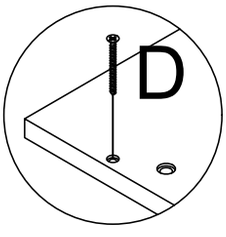

C	×4
φ6x30	

D	×4
M4x40MM	

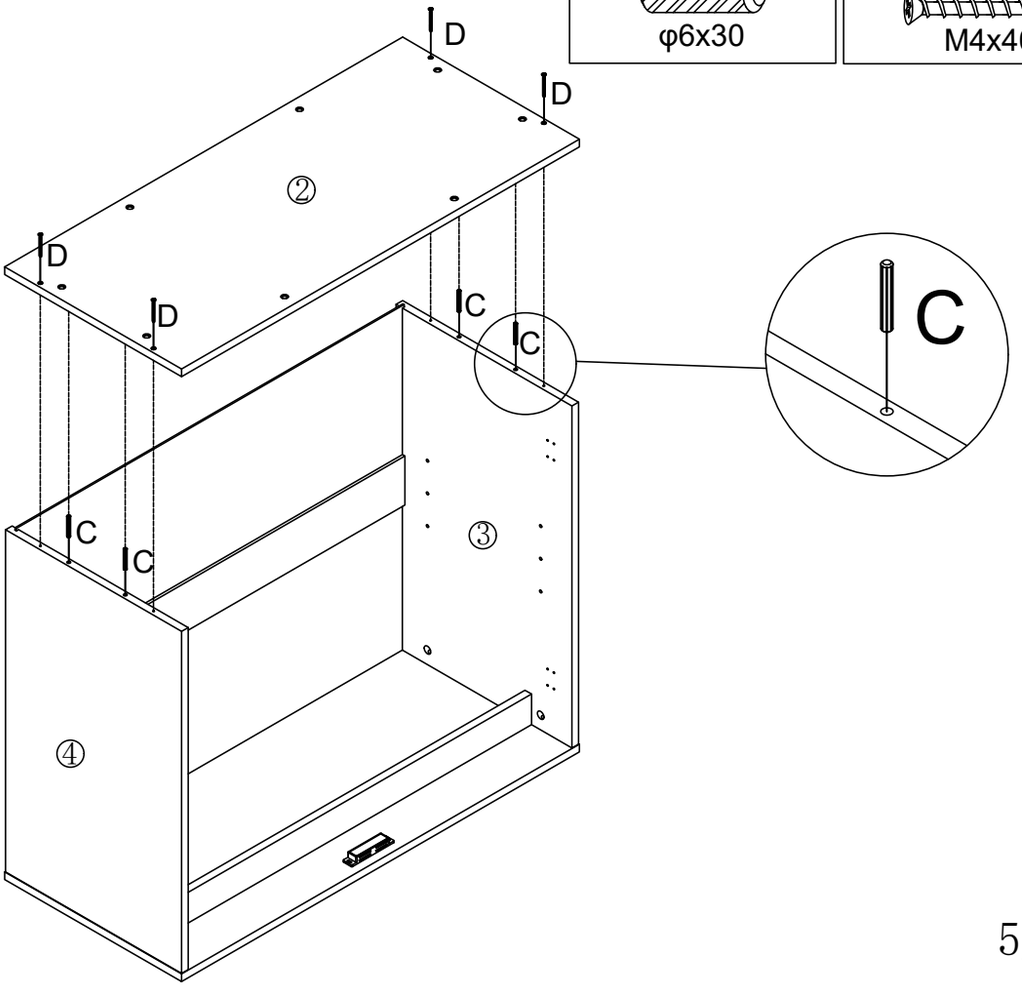

7

G	×4
M6x40MM	

H	×1

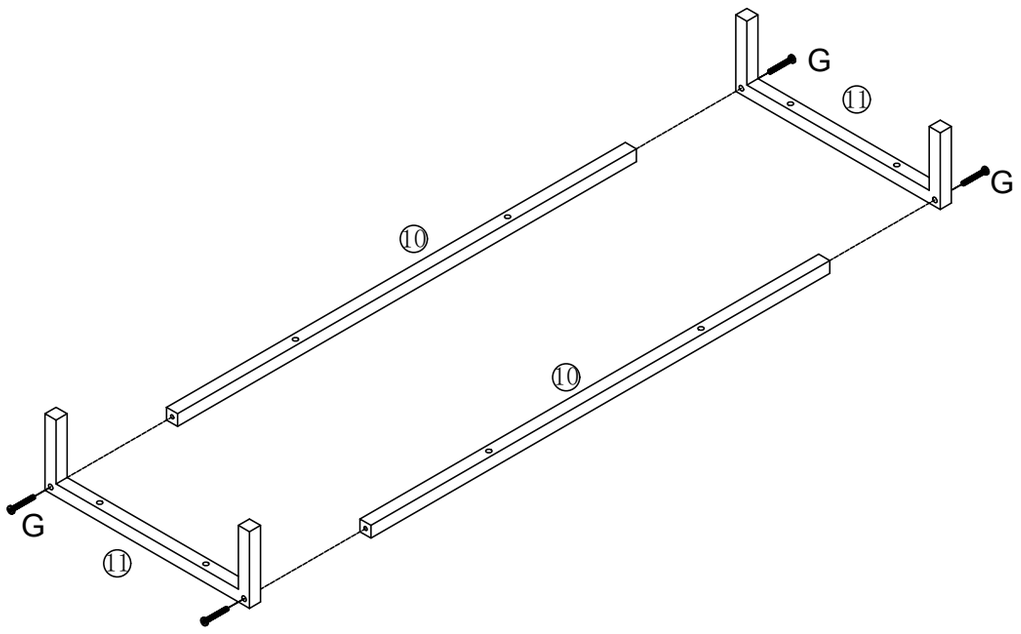

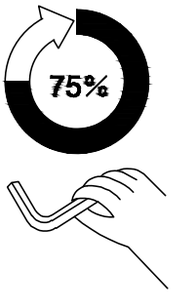

8

F	×8
M6x30MM	

H	×1

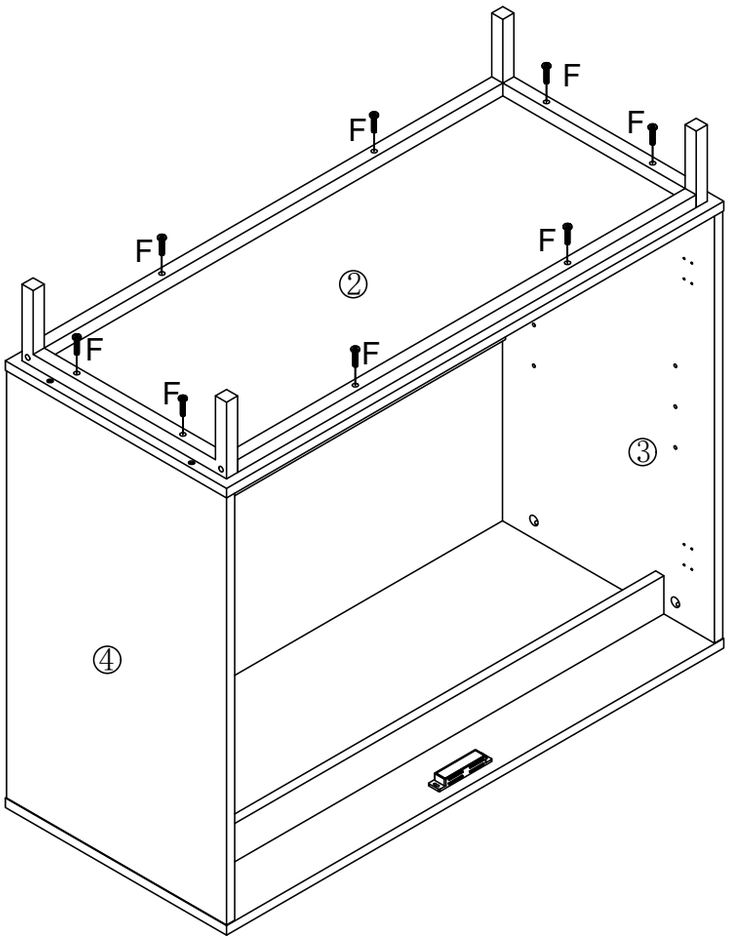

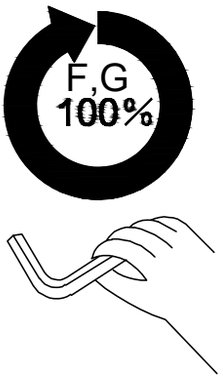

9

L	×8

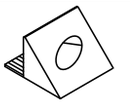

K	×14



M3.5x14MM

N	×2



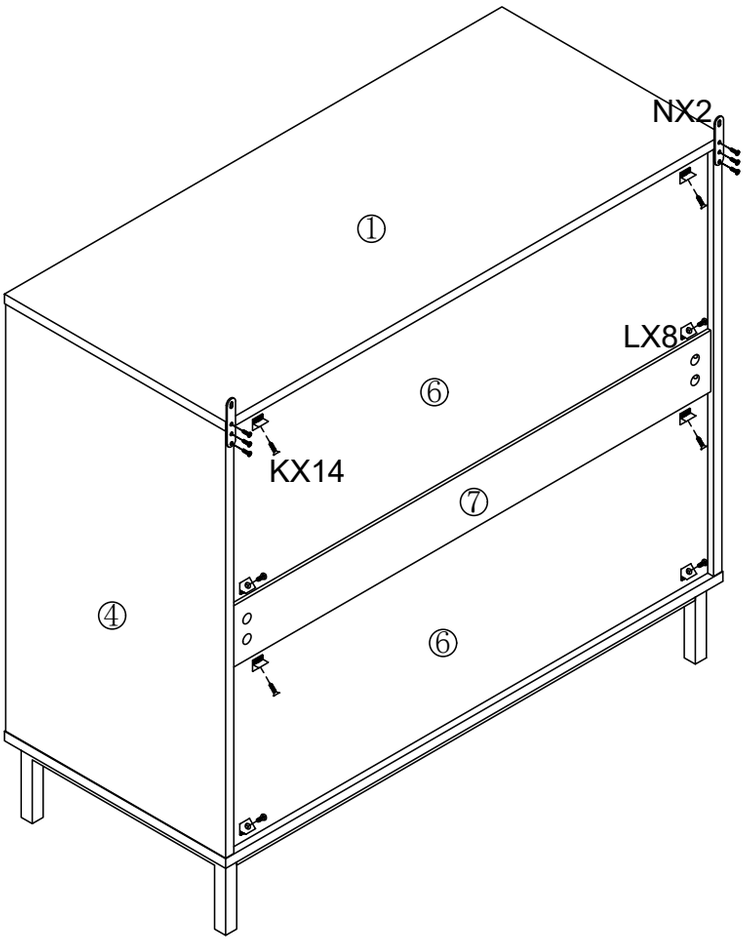

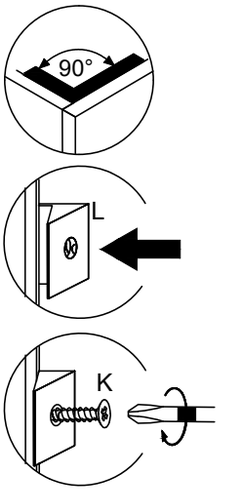

10

S	×4



11

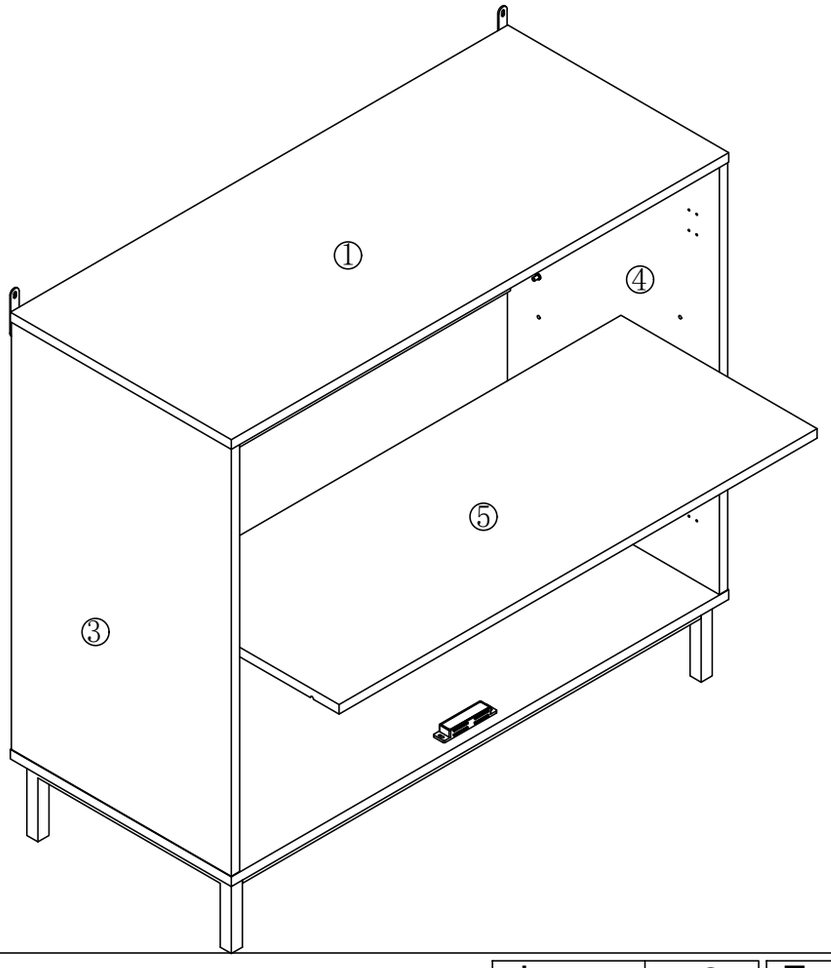

12

J	×2

E	×8



Q	×4

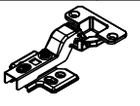

K	×8



R	×4



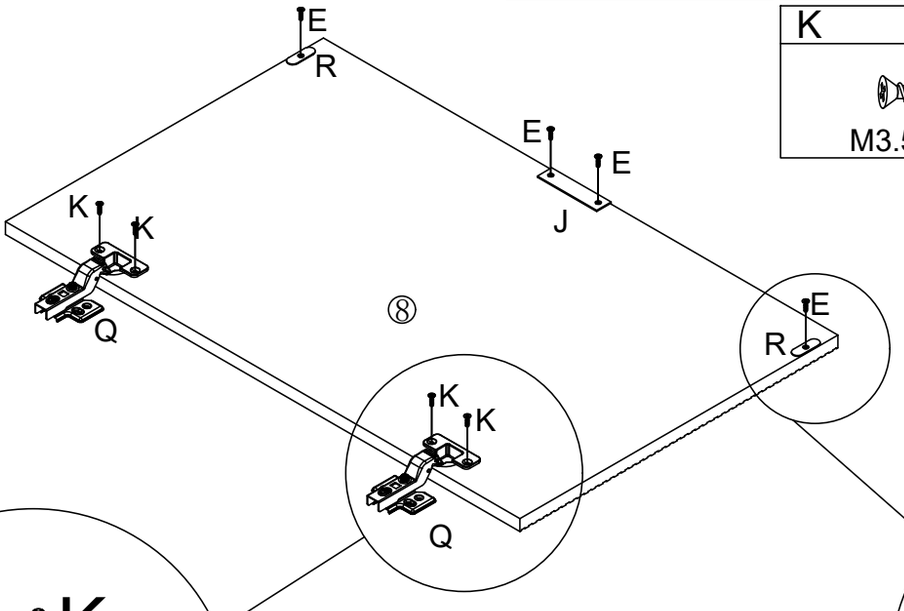

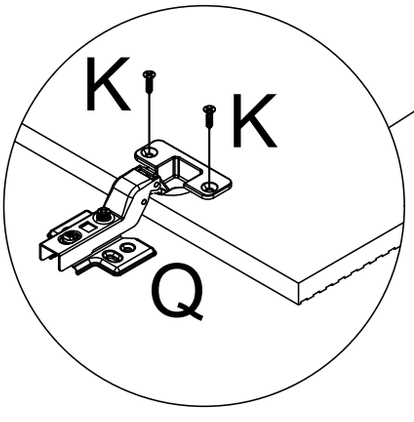

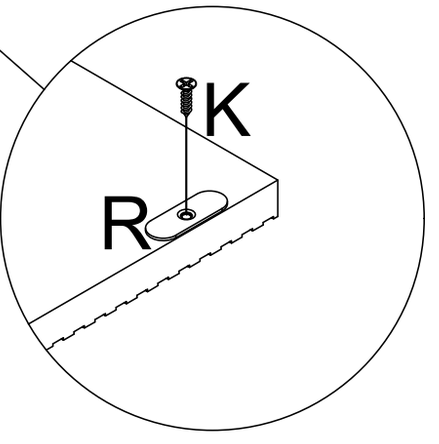

X2

13

K	×16
M3.5x14MM	

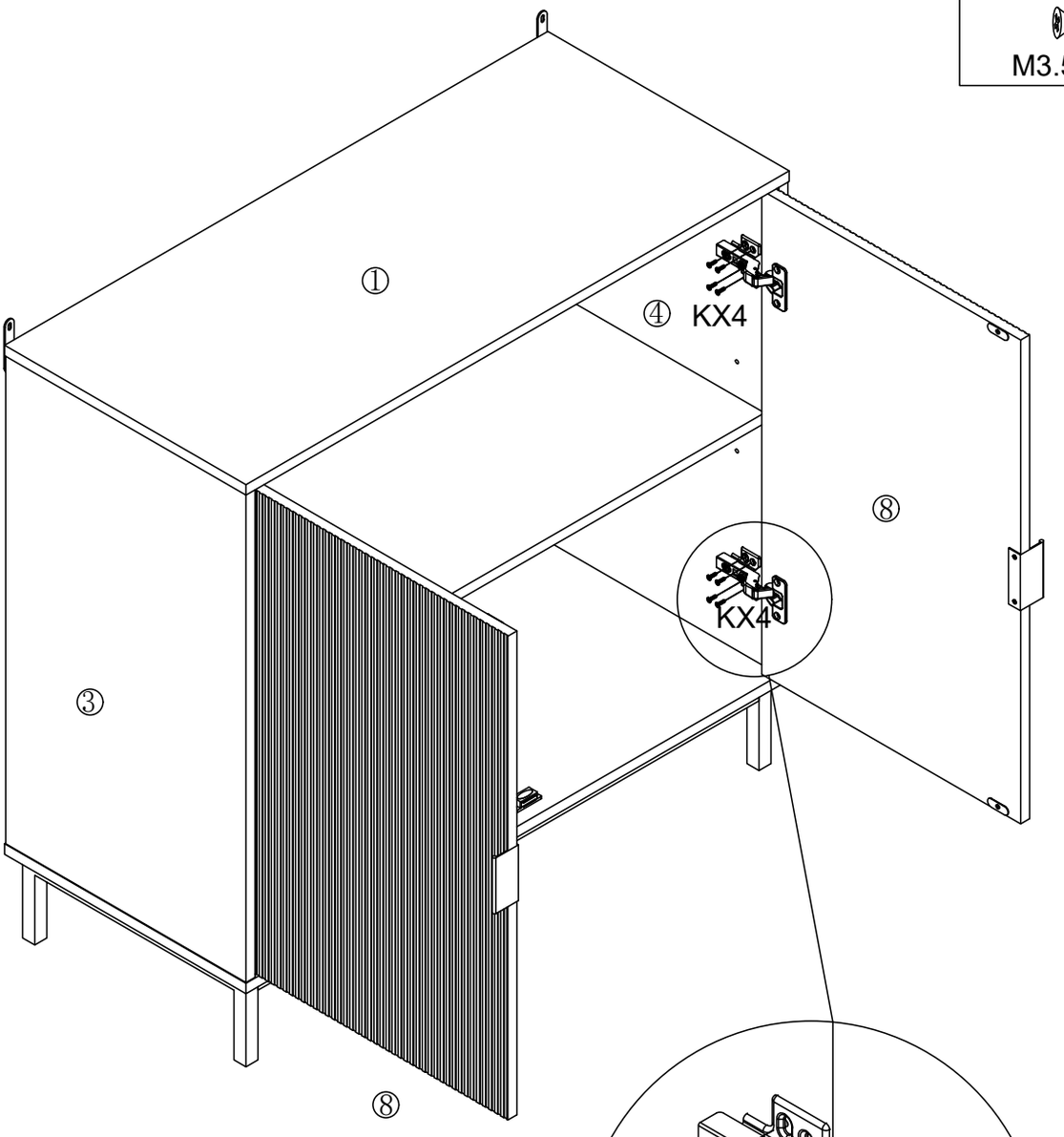

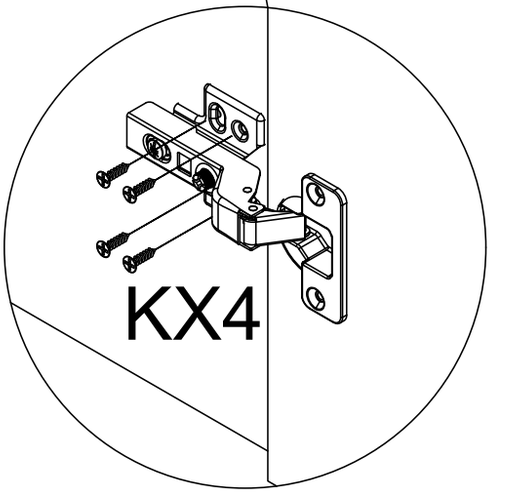

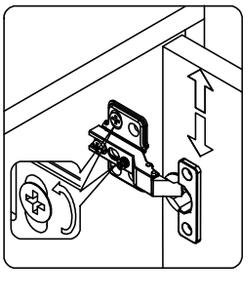

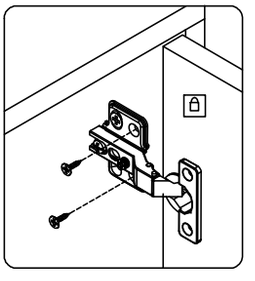

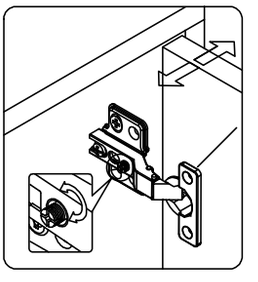

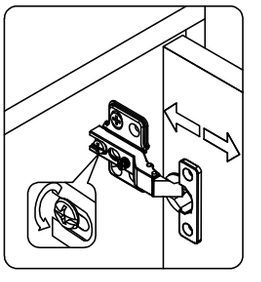

14

D	×2
M4x40MM	

P	×2

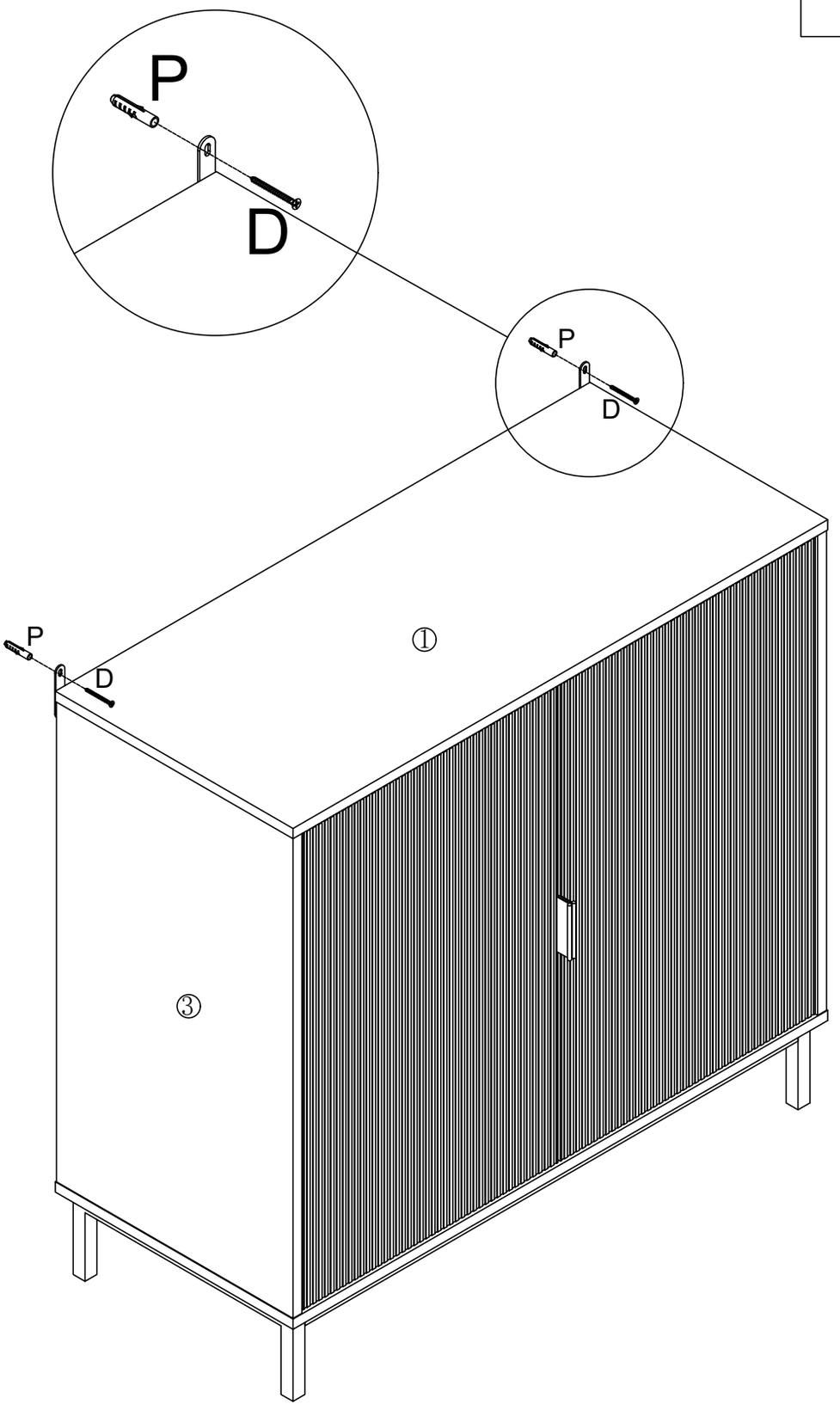

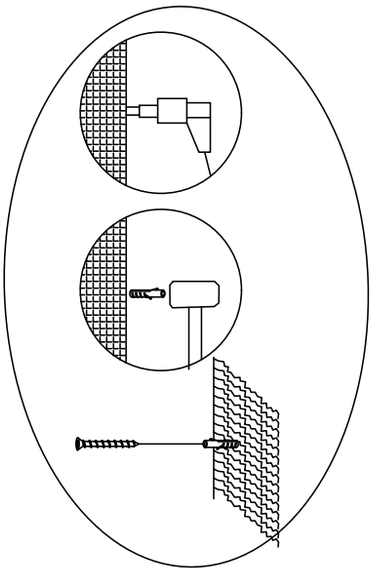

15

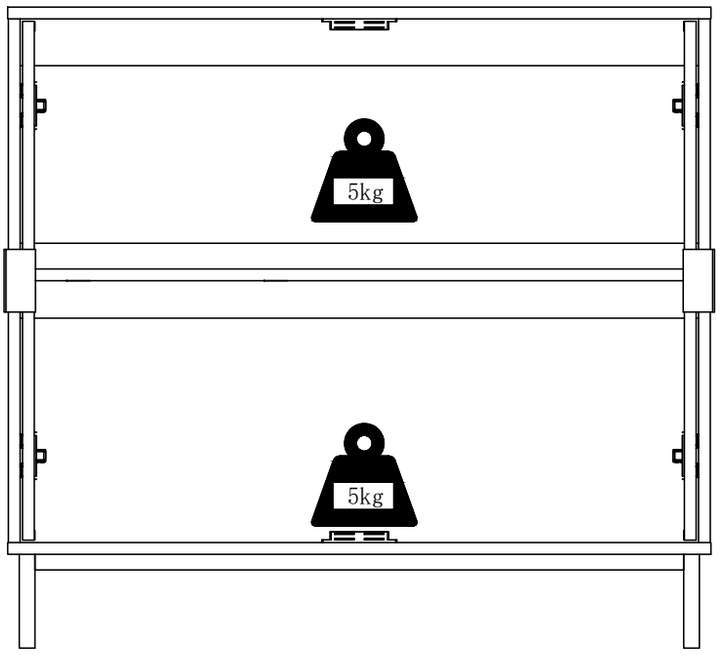

16

