BDSK Handels GmbH & Co. KG
Mergentheimer Straße 59
DE-97084 Würzburg Germany
info@xxxlutz.at

79680377-01
79680377-02
COUCHTISCH

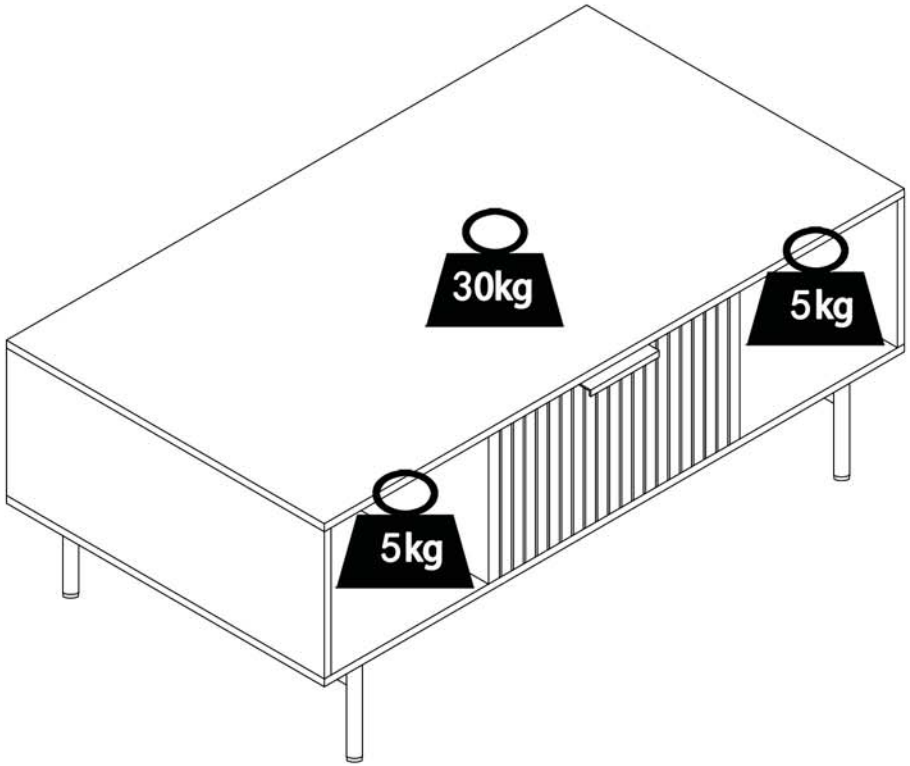

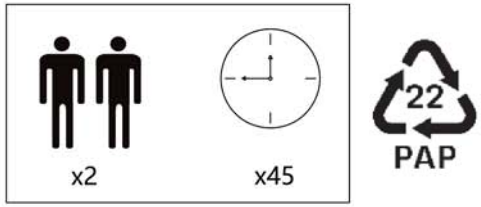





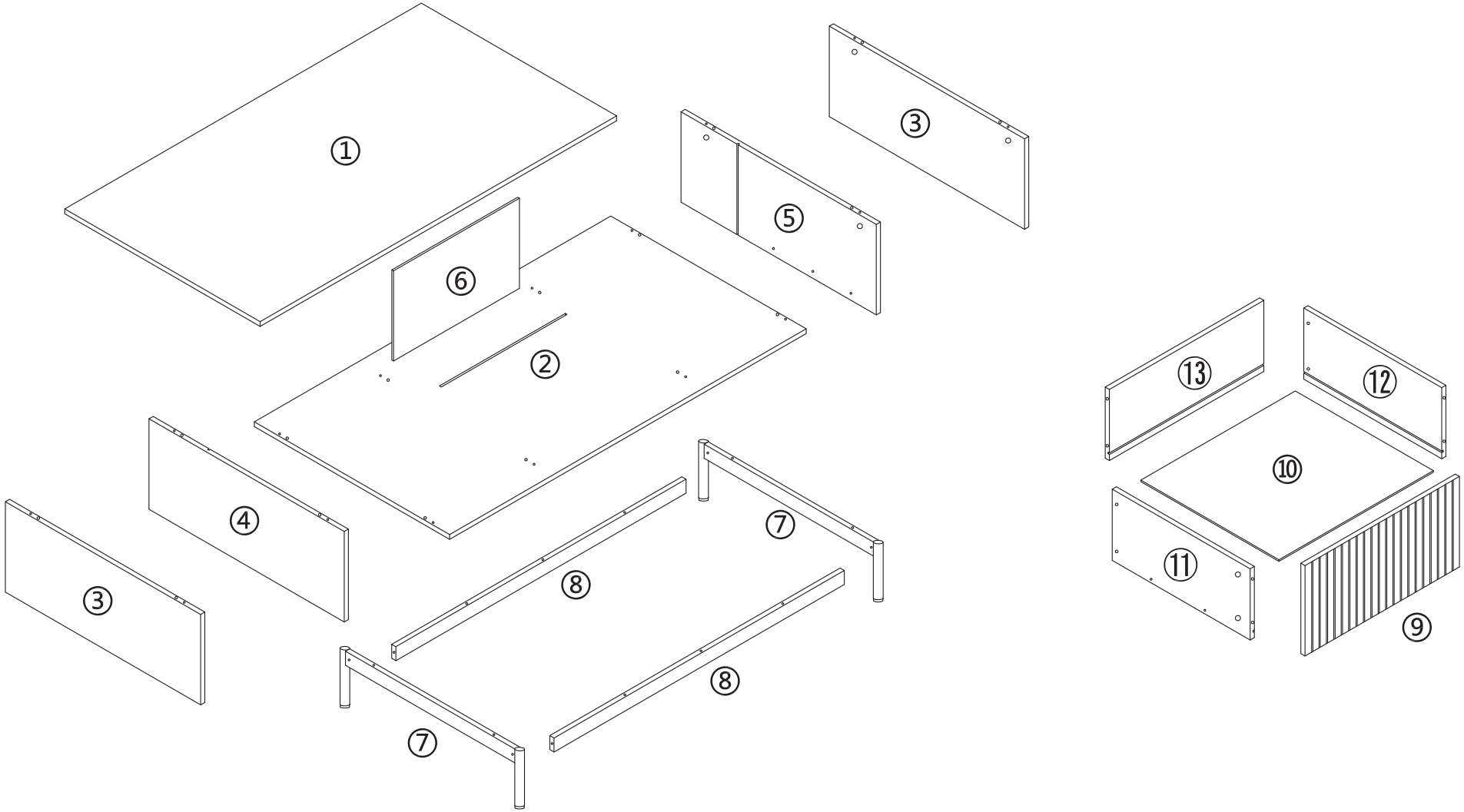
①
③
⑤
⑥
②
④
③
⑦
⑧
⑧
⑦
⑬
⑫
⑩
⑪
⑨

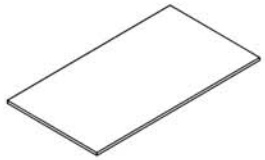	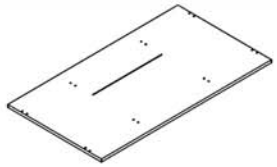	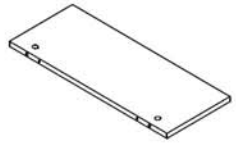	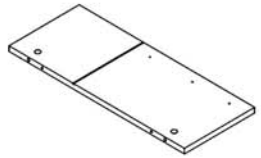	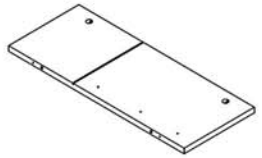
① x1	② x1	③ x2	④ x1	⑤ x1
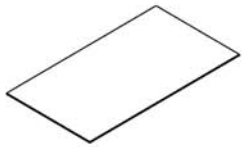				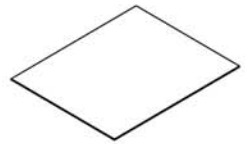
⑥ x1	⑦ x2	⑧ x2	⑨ x1	⑩ x1
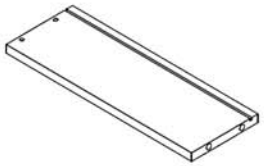				
⑪ x1	⑫ x1	⑬ x1		

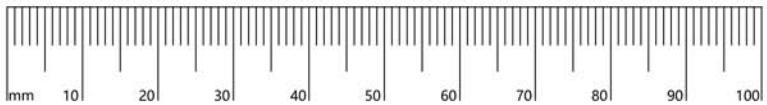

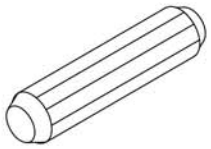 D6X30mm		 D4X35mm		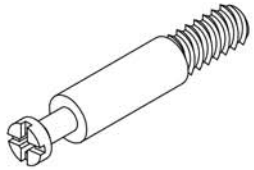 D6X35mm				 D3X12mm	
Ⓐ	x16	Ⓑ	x12	Ⓒ	x12	Ⓓ	x12	Ⓔ	x12
 D4X40mm		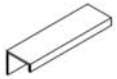		 D6X35mm		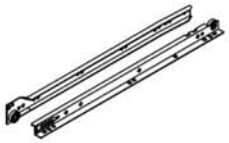			
Ⓕ	x10	Ⓖ	x1	Ⓗ	x4	Ⓘ	x1	Ⓙ	x1
		 D3X14mm				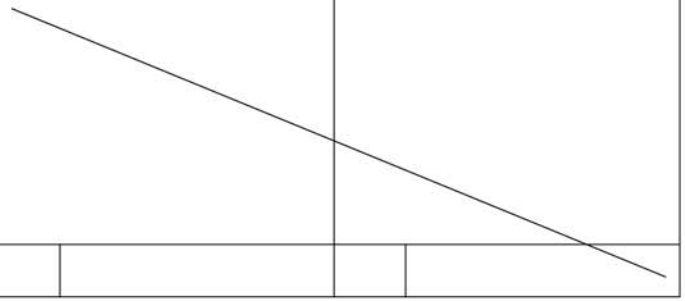			
Ⓚ	x4	Ⓛ	x4	Ⓜ	x1				



01

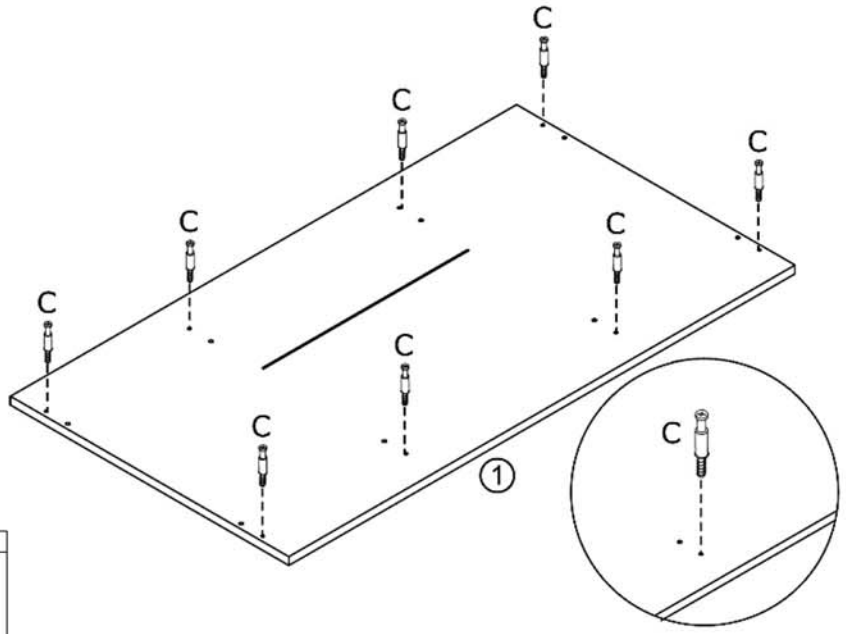

C x8
D6X35mm

02

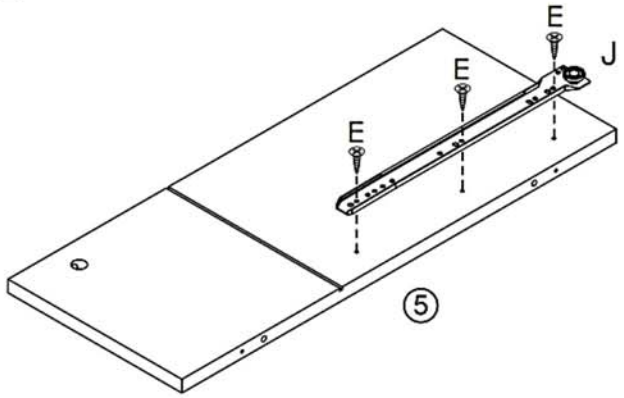

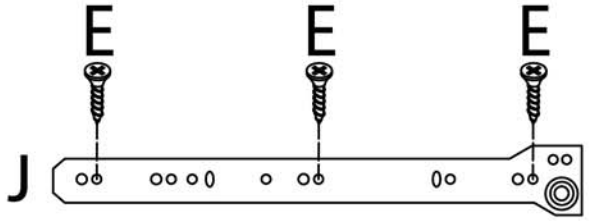

J x1	E x3
	D3X12mm

03

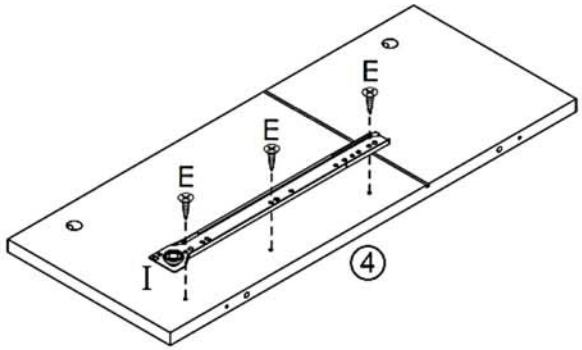

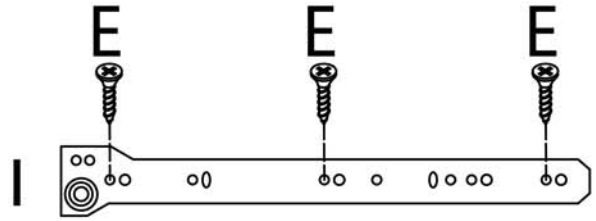

I x1	E x3
	D3X12mm

04

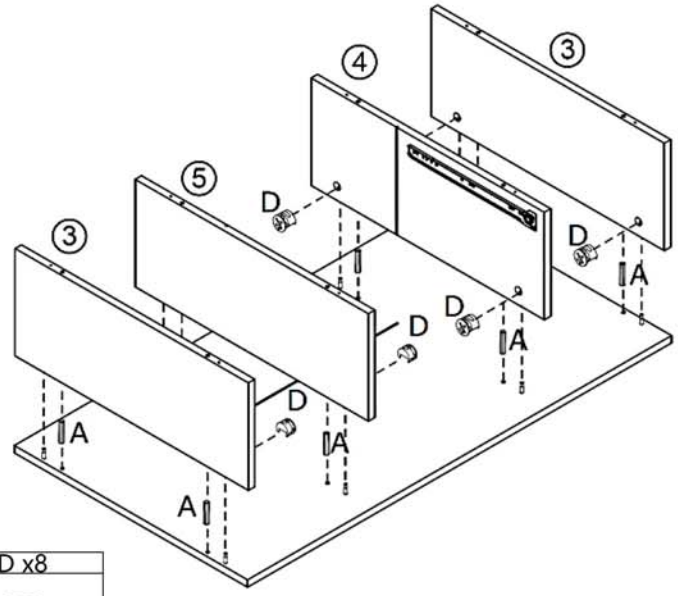

A x8	D x8
D6X30mm	

05

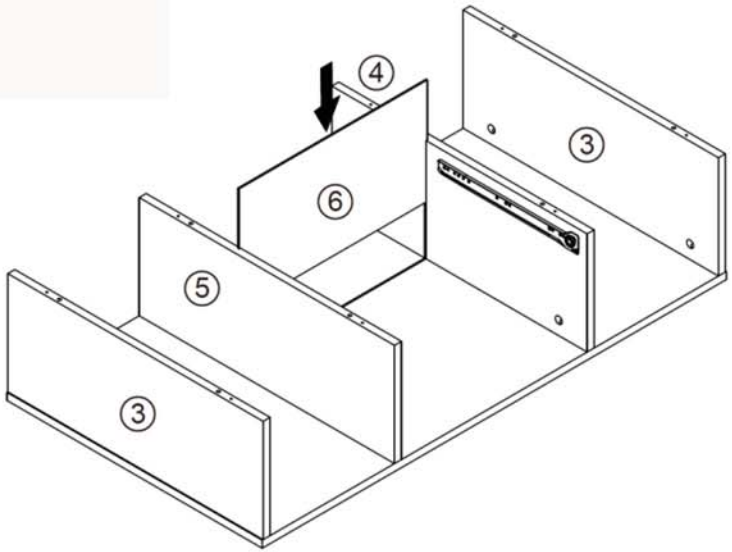

06

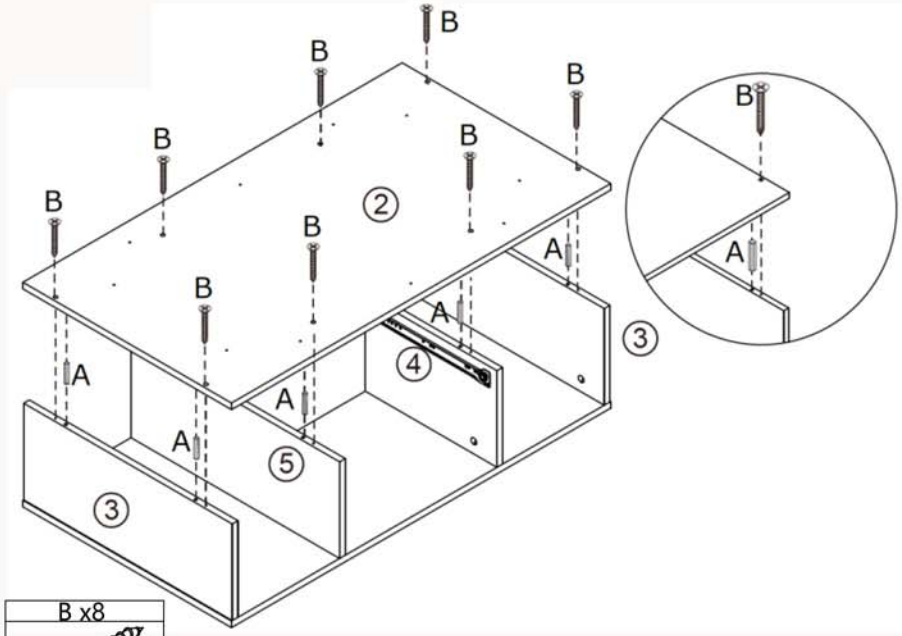

A x8	B x8
	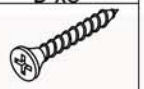
D6X30mm	D4X35mm

07

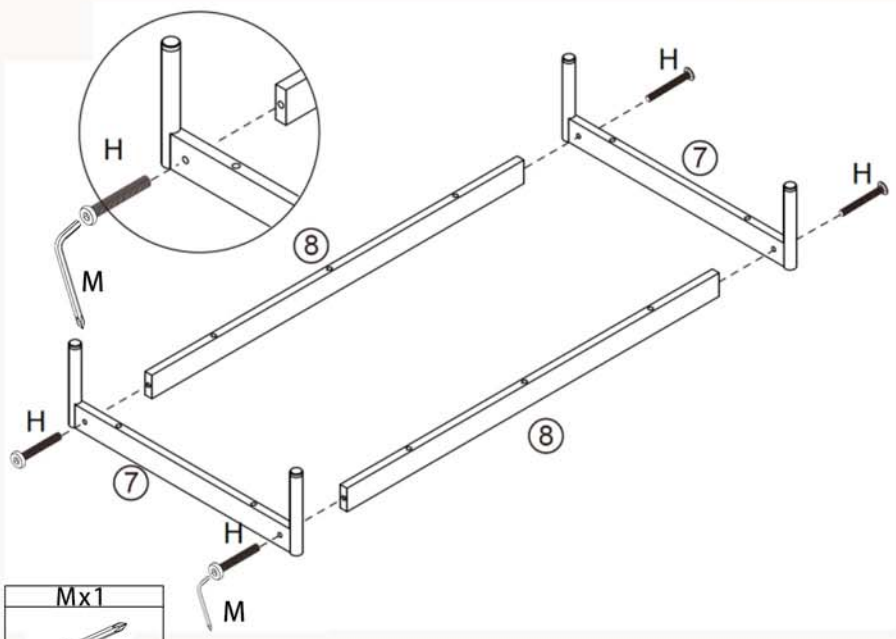

H x4	M x1
	
D6X35mm	

08

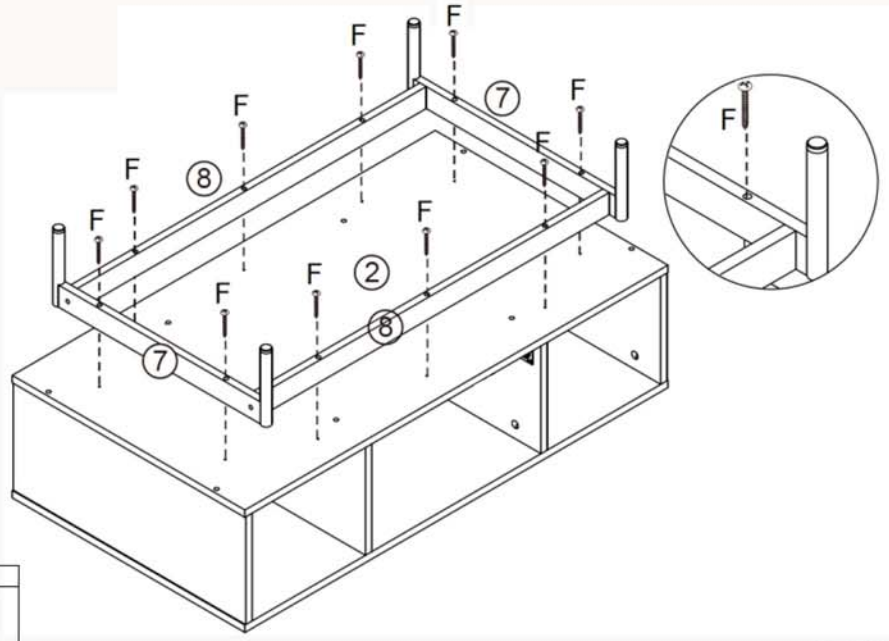

F x10

D4X40mm

09

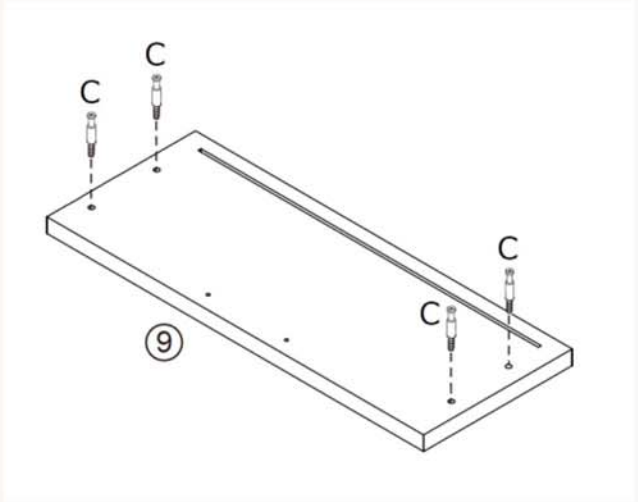

C x4



D6X35mm

10

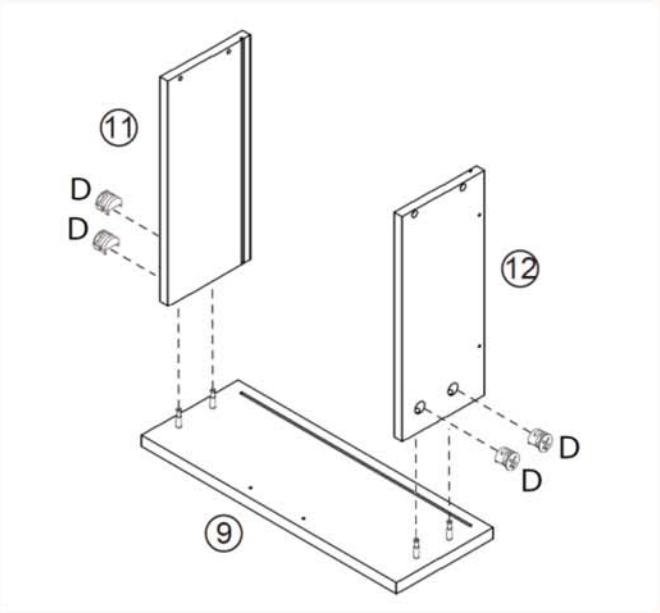

D x4



11

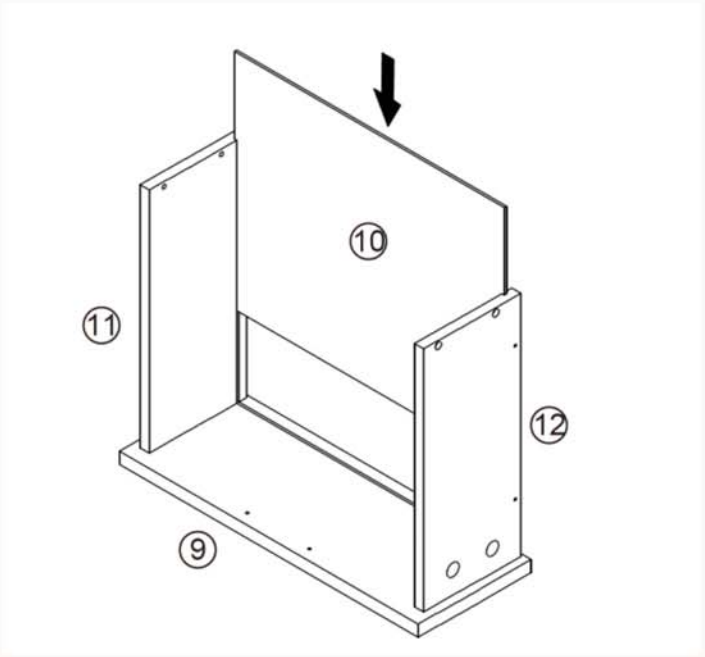

12

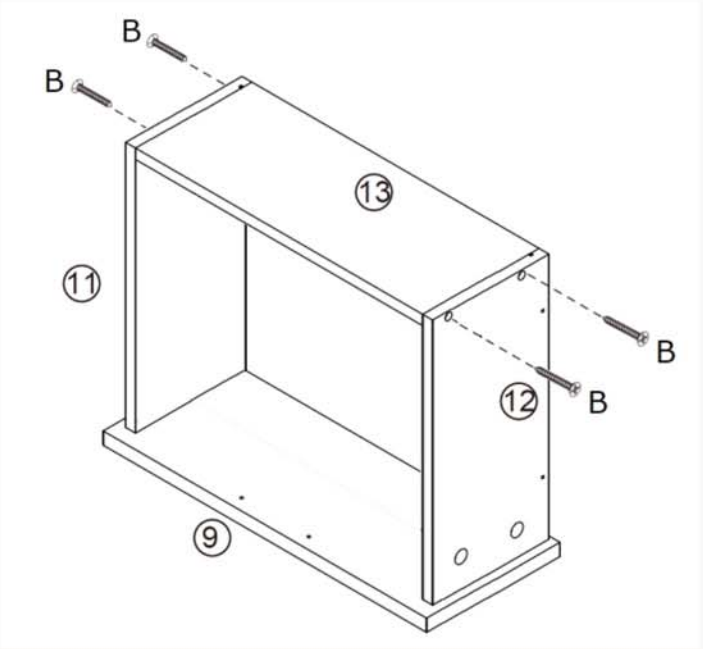

B x4



D4X35mm

13

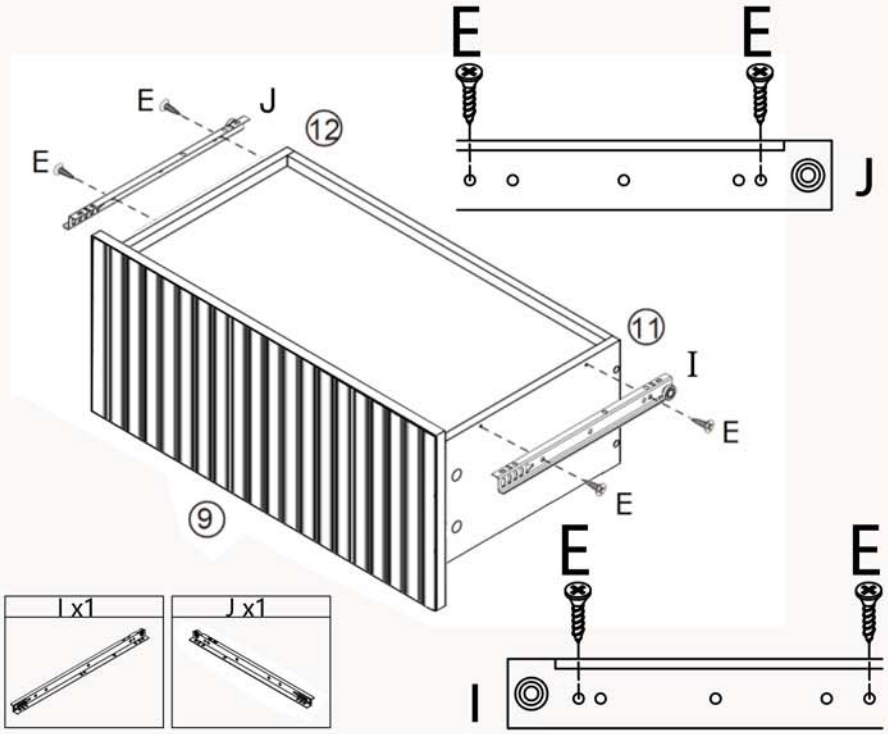

E x4	I x1	J x1
D3X12mm		

14

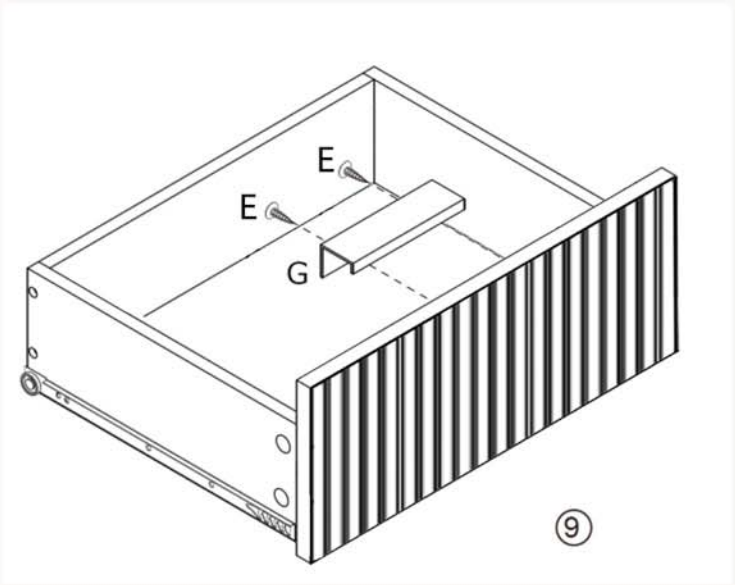

E x2
D3X12mm

15

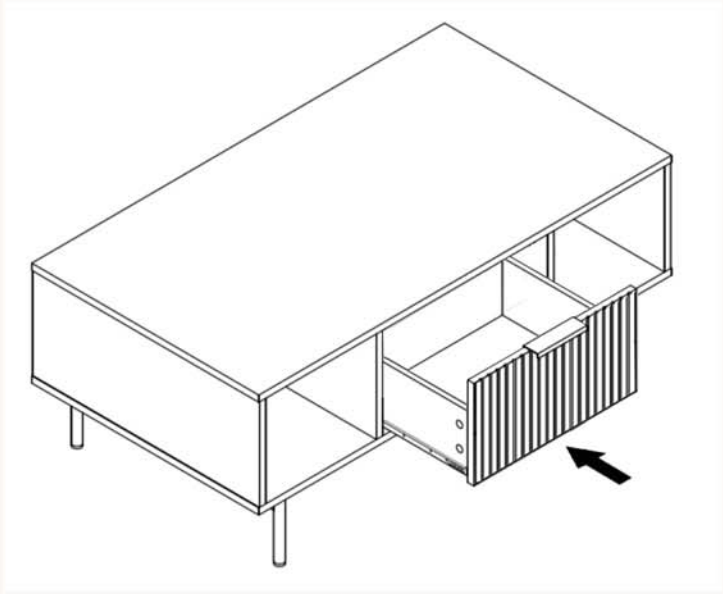

16

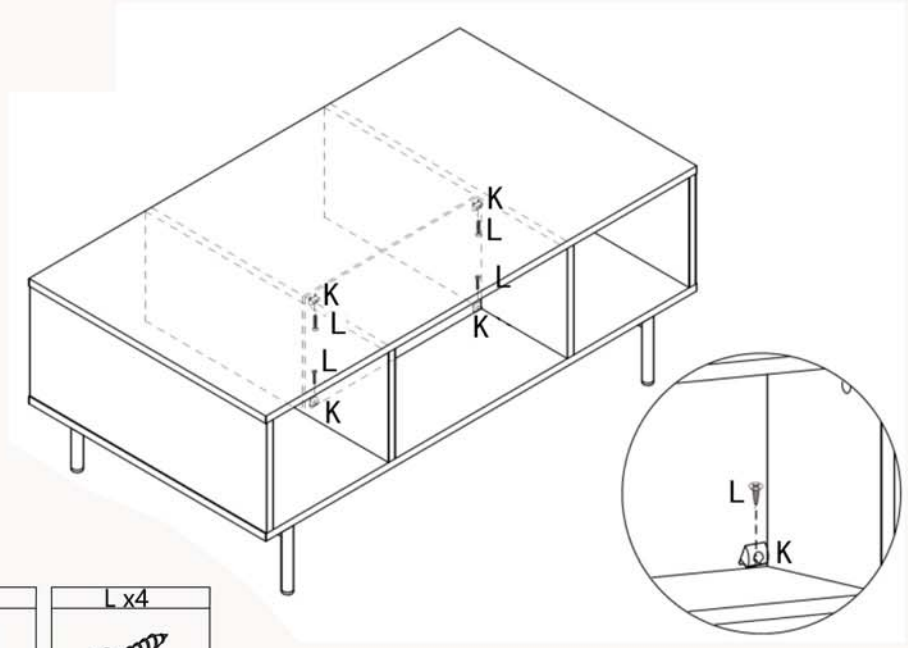

K x4	L x4
	D3X12mm