ATTENTION! Please read the user manual carefully before use!

TECHNICAL INFORMATION

Model: 55790004 (MATT BLACK)
Rating: 220-240V ~, 50Hz, 3 X GU10 LED Max.3W (Bulbs exclude)
Installation Method: Ceiling mounting
Electrical shock protection: Class I
IP rating: IP20

WARNINGS

1. Indoor use only.
2. This luminaire must be installed by a qualified person.
3. Prevent the luminaire from moist environment, in order to avoid leakage and electric shock.
4. Mark sure the power supply is disconnected before installation.
5. While the luminaire is working, don't touch it by hand.
6. The luminaire is approved for its intended use only, any changes are not allowed.
7. Replace failed lamps immediately by lamps of the same rated voltage and wattage to prevent overheating. Disconnect the lamp from the electrical supply and wait for it to cool down. Follow the indications on the drawing when changing the bulb.
8. If the external flexible cable or cord of this luminaire is damaged, it shall be exclusively replaced by the manufacturer or his service agent or a similar qualified person in order to avoid a hazard.
9. Meaning of crossed out wheeled dustbin: Do not dispose of electrical appliances as unsorted municipal waste, use separate collection facilities contact your local government for information regarding the collection systems available. If electrical appliances are disposed of in landfills or dumps, hazardous substances can leak into the ground and water then get into the food chain, damaging your health and well-being.

Installation

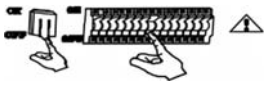

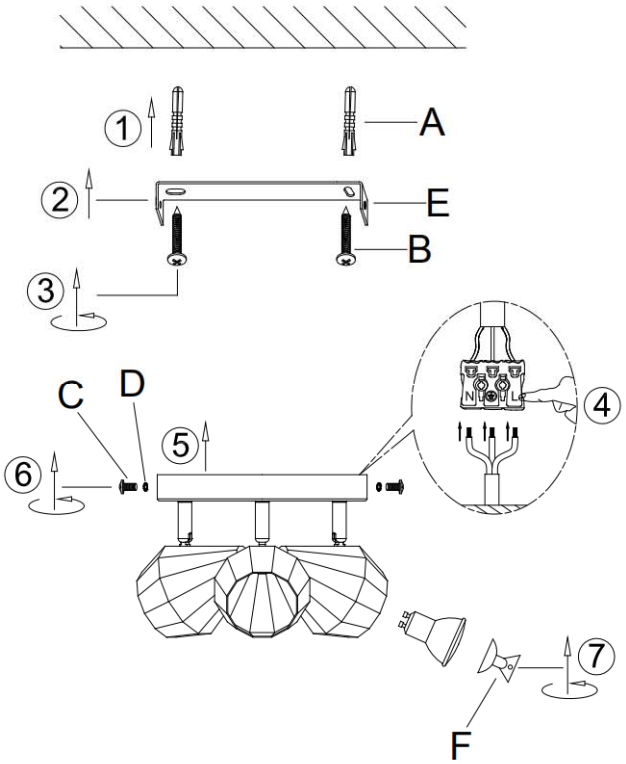

spare parts		
code	part	item no.
A	X2	55790004
B	X2	55790004
C	X2	55790004
D	X2	55790004
E	X1	55790004
F	X1	55790004

BDSK Handels GmbH & Co. KG Mergentheimer Straße 59
DE-97084 Würzburg Germany, UID: DE279448078
www.xxxlutz.com
info@xxxlutz.at