

## BOX 1/3

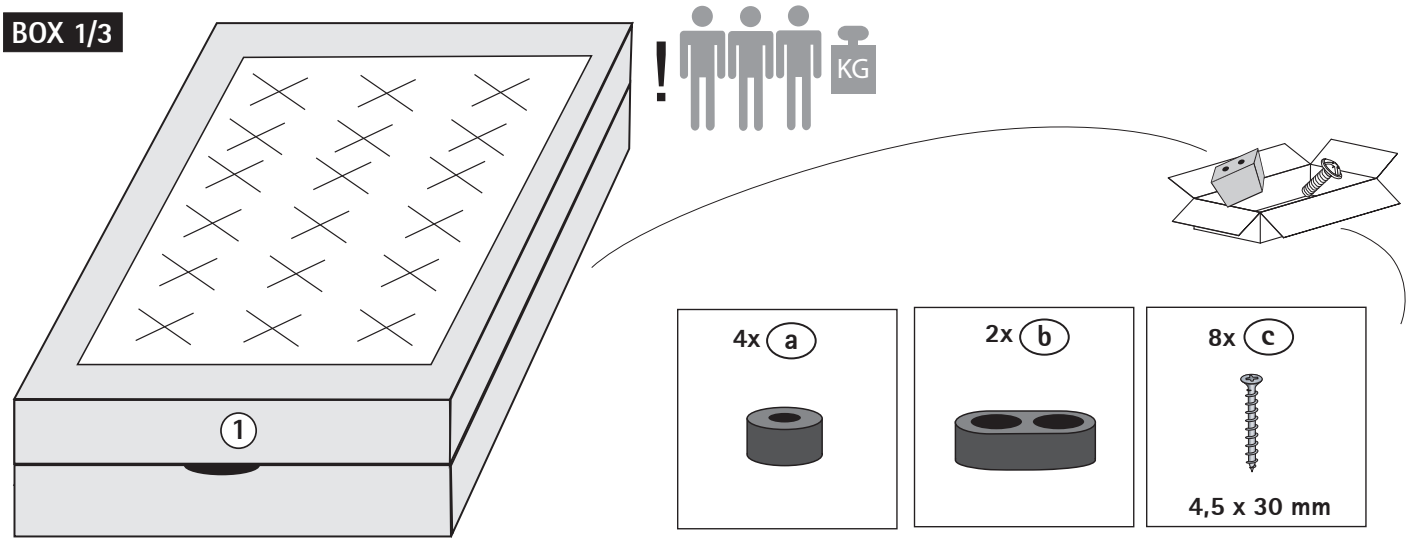


## BOX 2/3

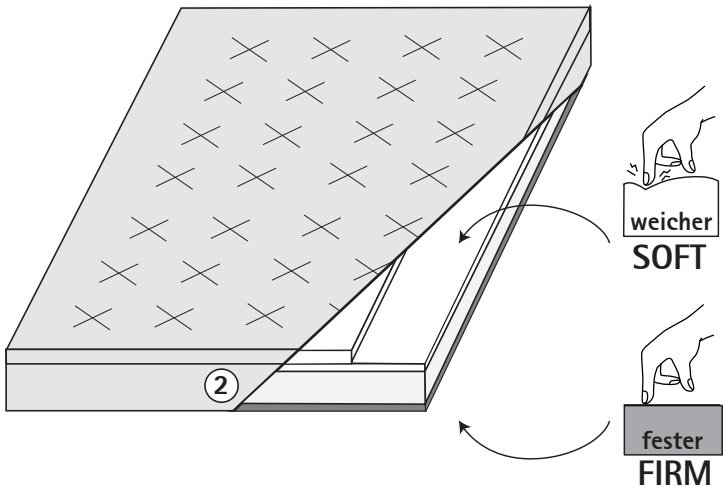


## BOX 3/3

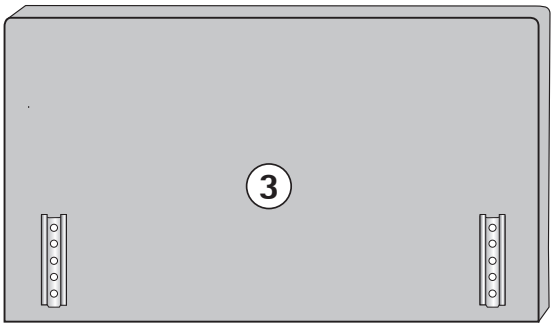


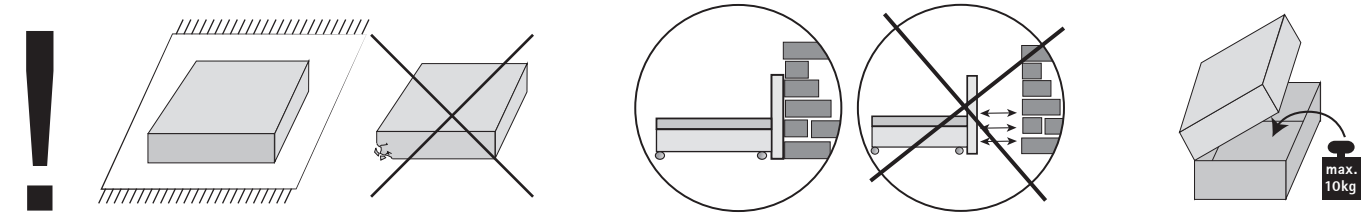


BX1440/BX1860/BX2380/BX2390 140x200 10401424 (03/26)

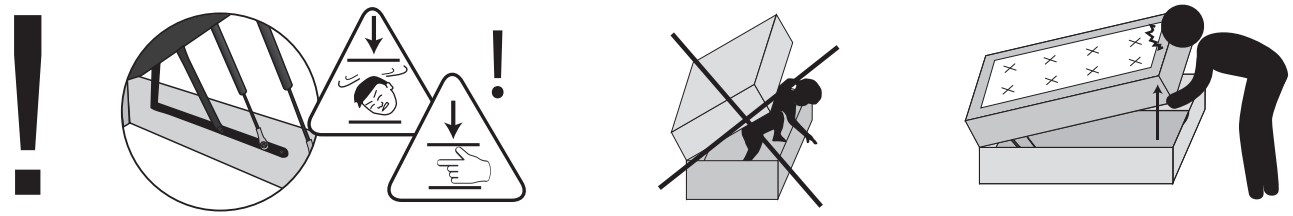



**1.**

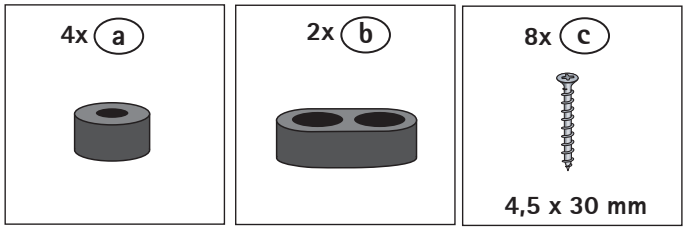


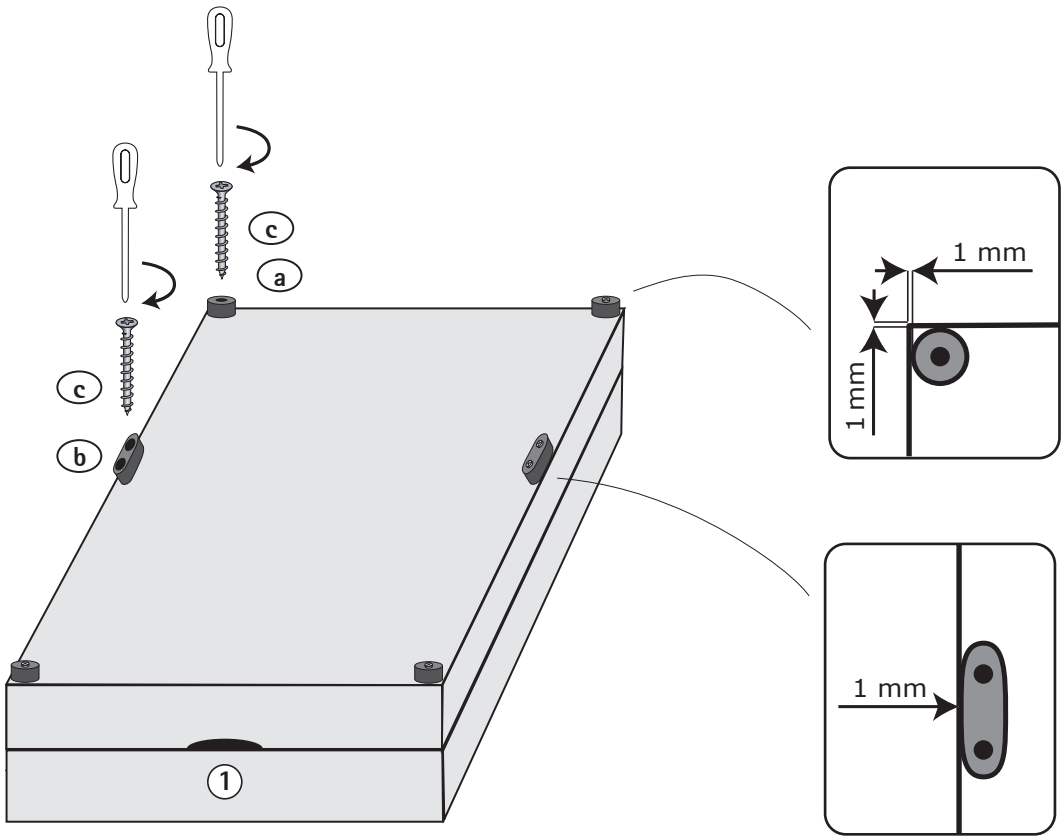

2.

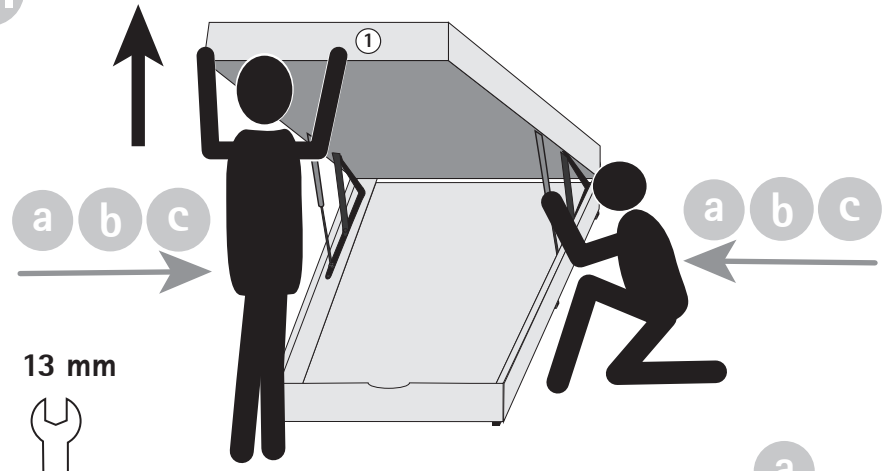


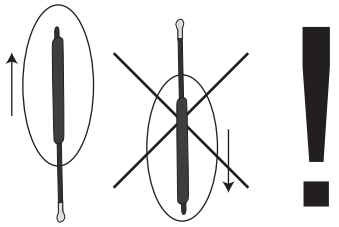

13 mm

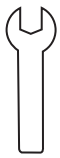

a

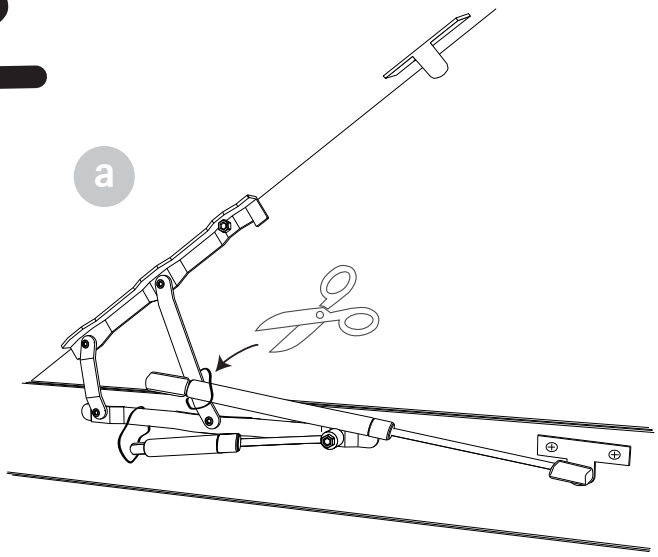

b

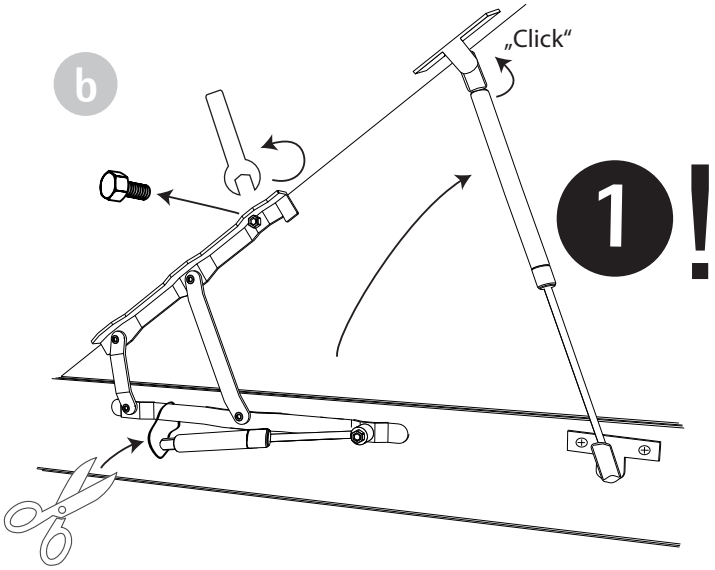


c

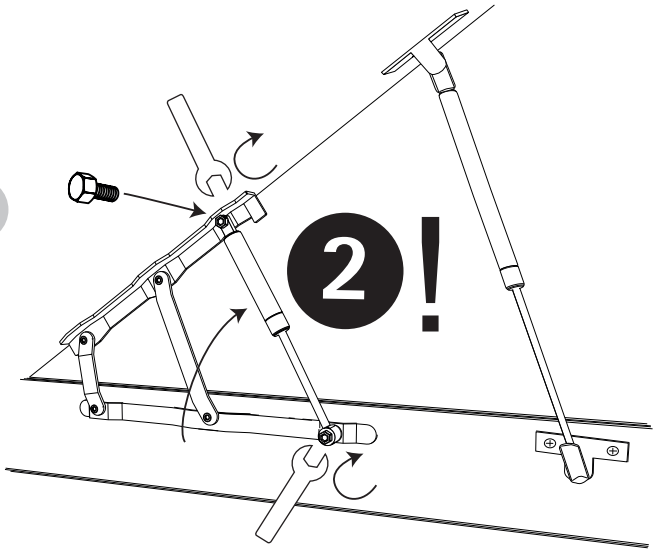

3.

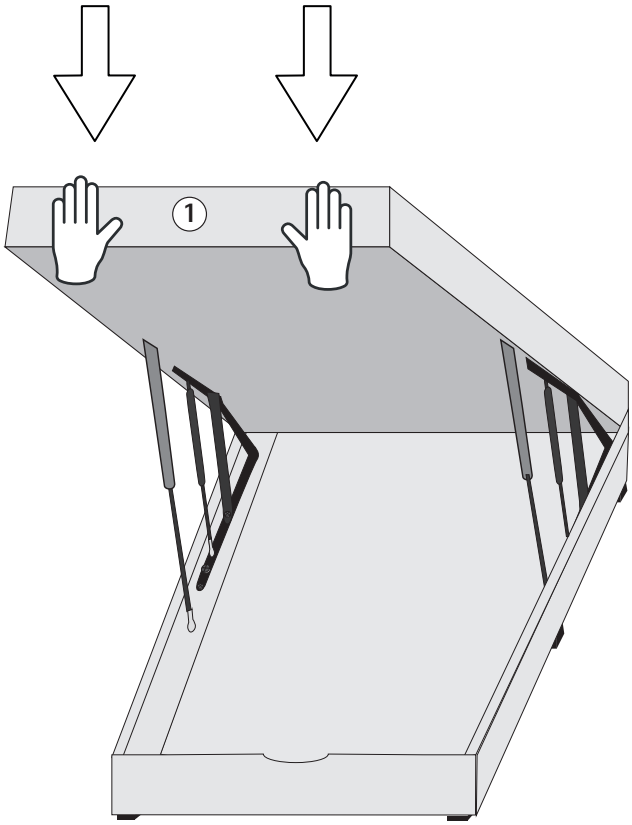


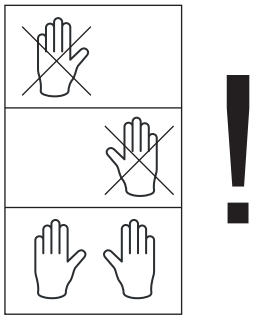

4.

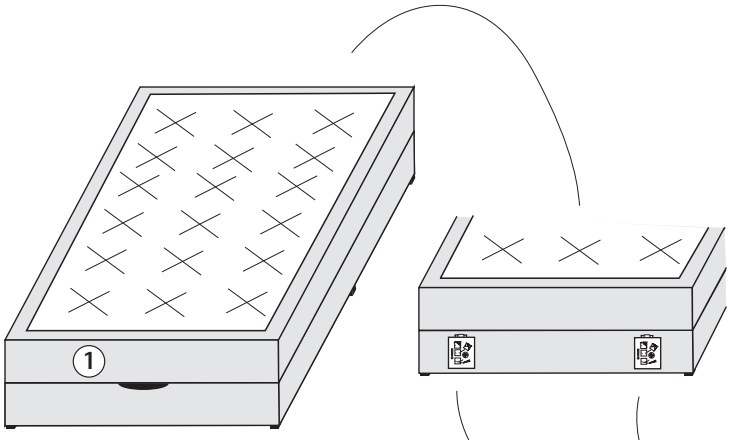


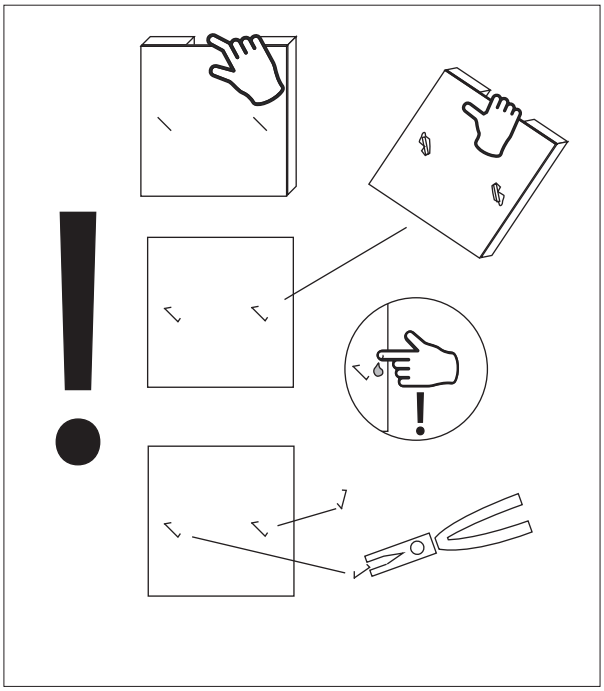

5.

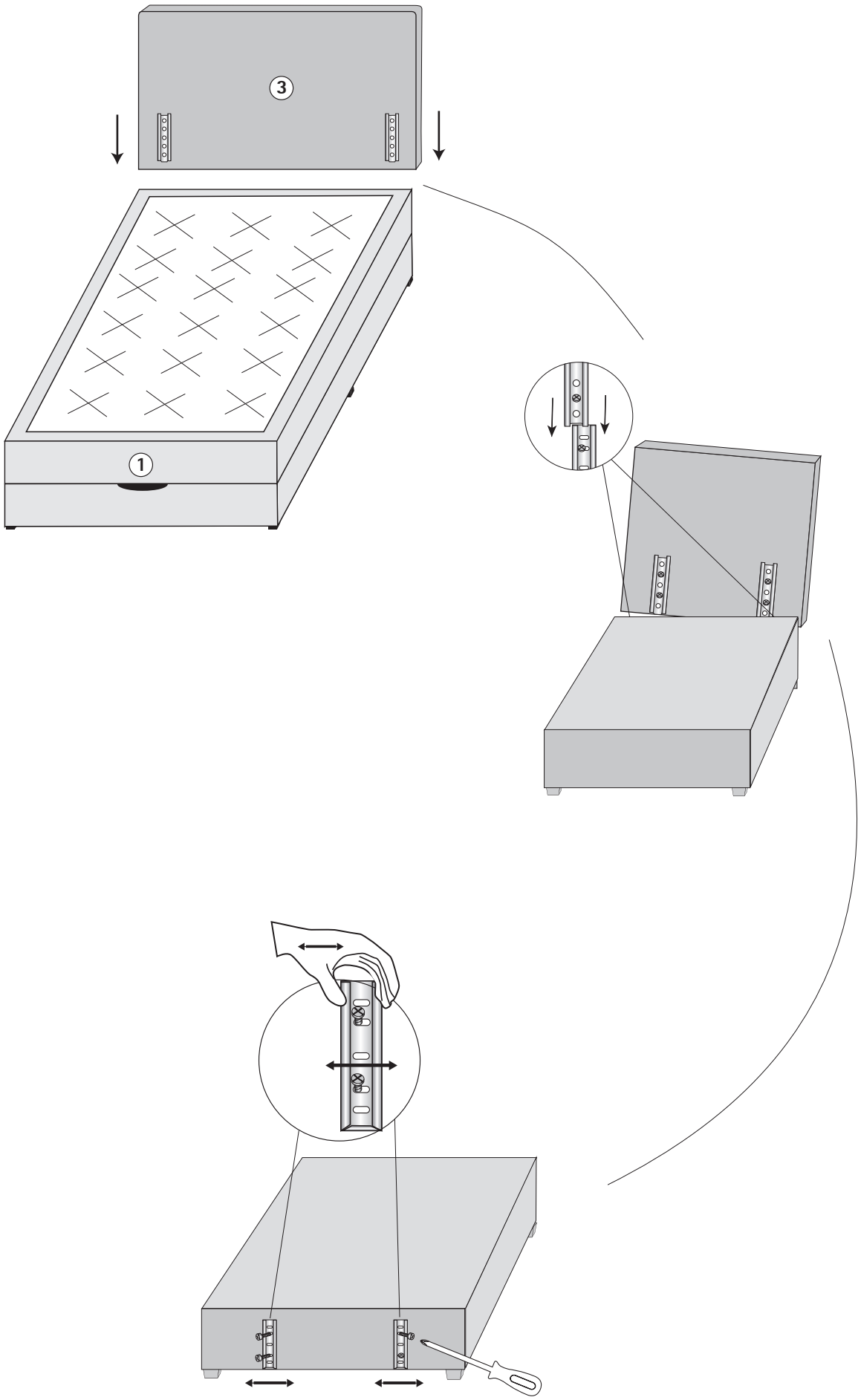

6.

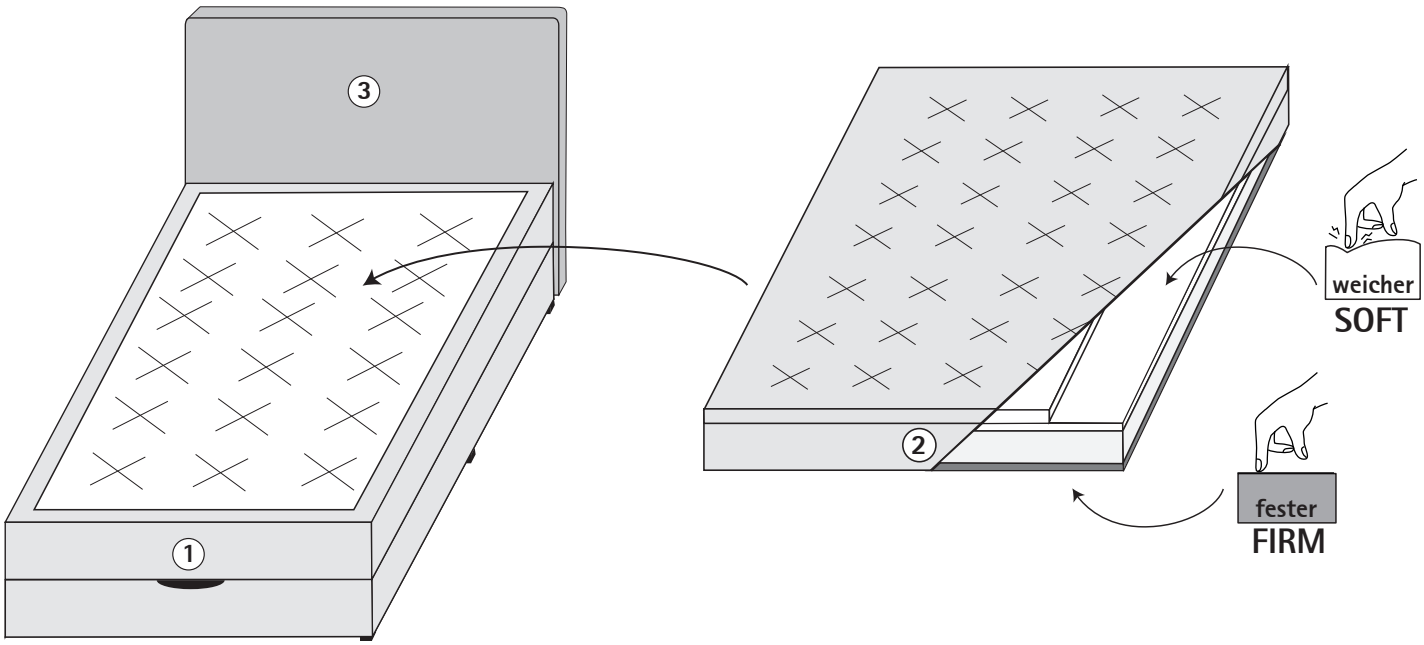
3
2
1
weicher
SOFT
fester
FIRM

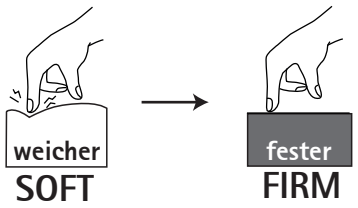
weicher
SOFT
fester
FIRM

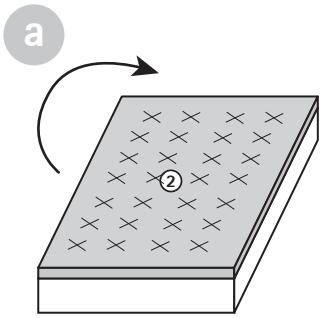
a
2

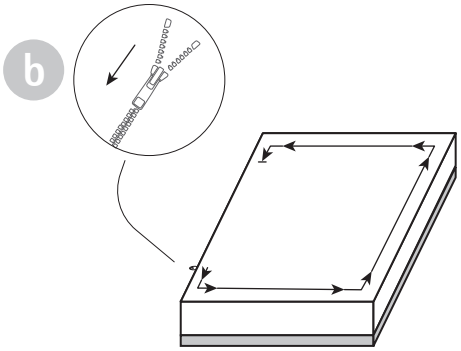
b

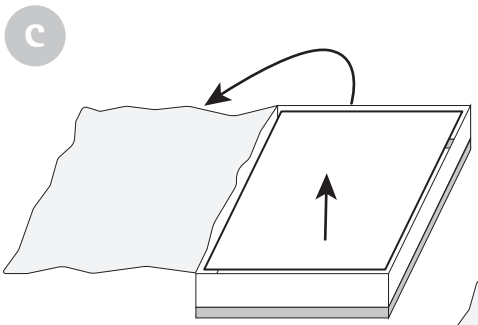
c

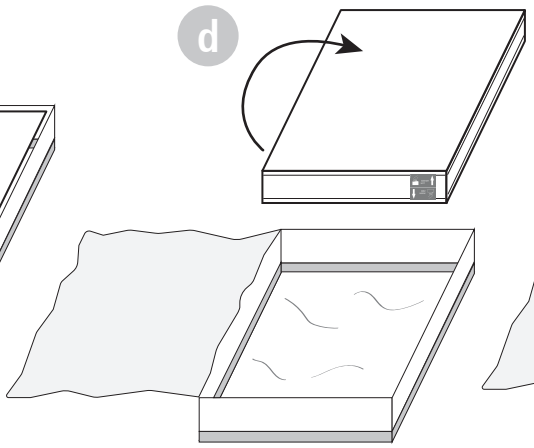
d

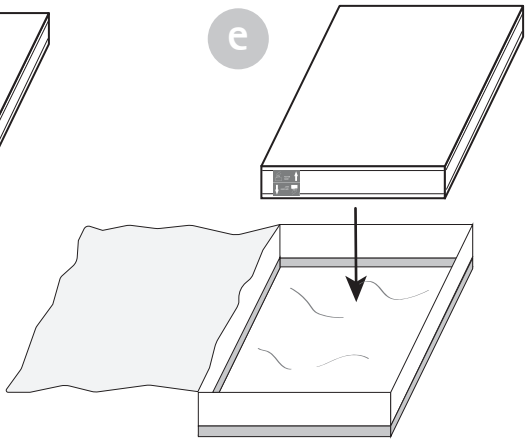
e

f

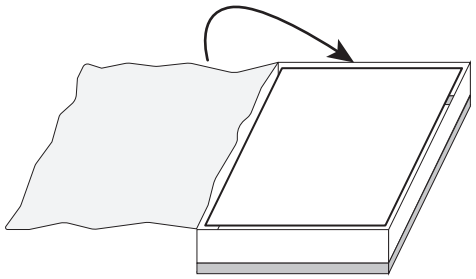

g

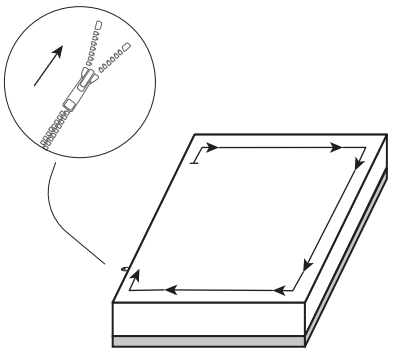

h

