37660014/01

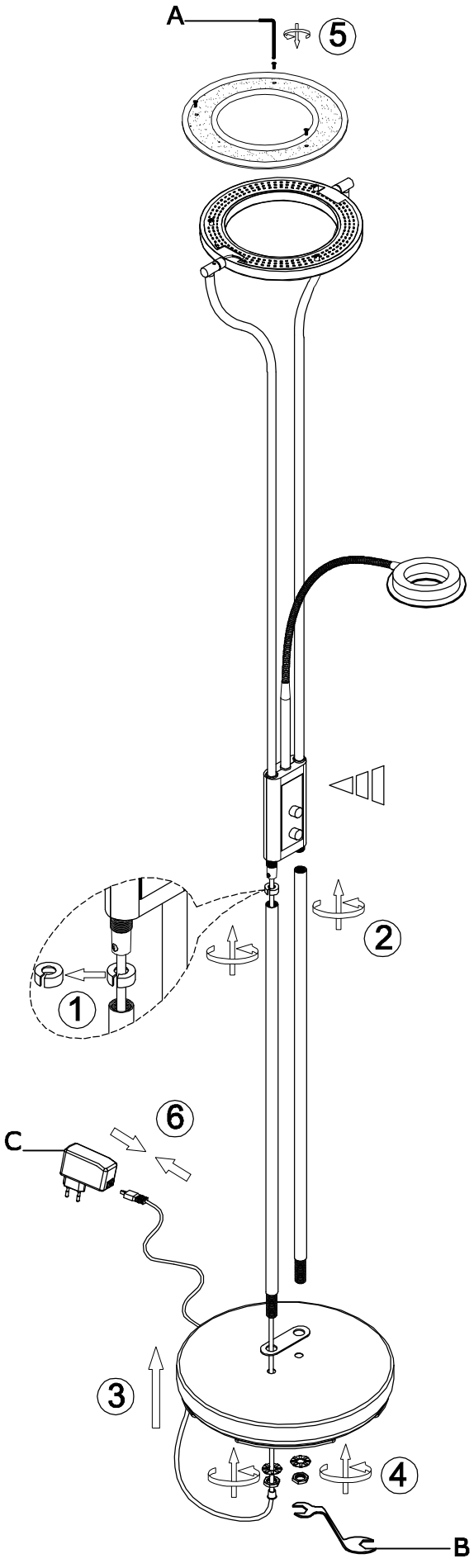

spare parts		
code	part	item no.
A	x 1 pcs	37660014/01
B	x 1 pcs	37660014/01
C	x 1 pcs LED DRIVER:LED-24V1A2P	37660014/01