BDSK Handels GmbH& Co.KG
Mergentheimer Strasse 59
97084 Würzburg / Germany

MILINO

28570099/01-02
NIKOLAS

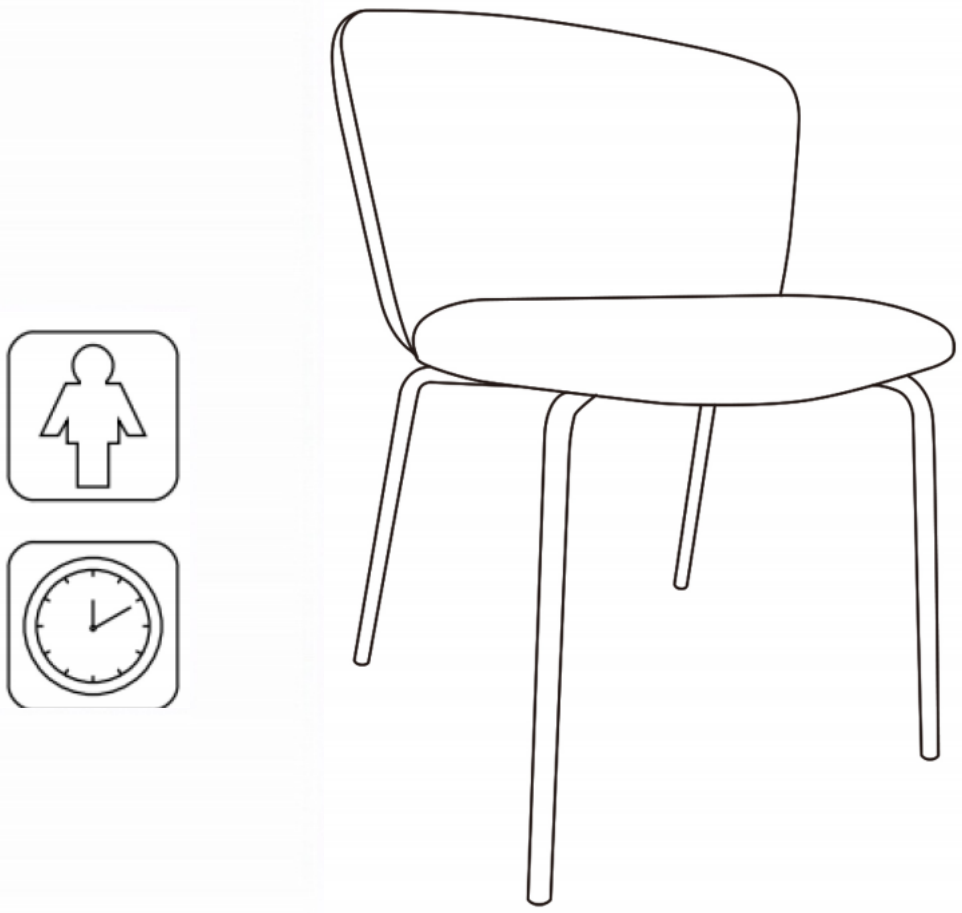







A x1	B x1	C x1	D x1	E x1
				 M6
F x4	**G x6**	**H x1**	**I x2**	**J x2**
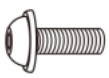 M6×20mm	 6×16mm	 M5	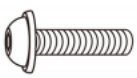 M6×35mm	 M8×16mm



1

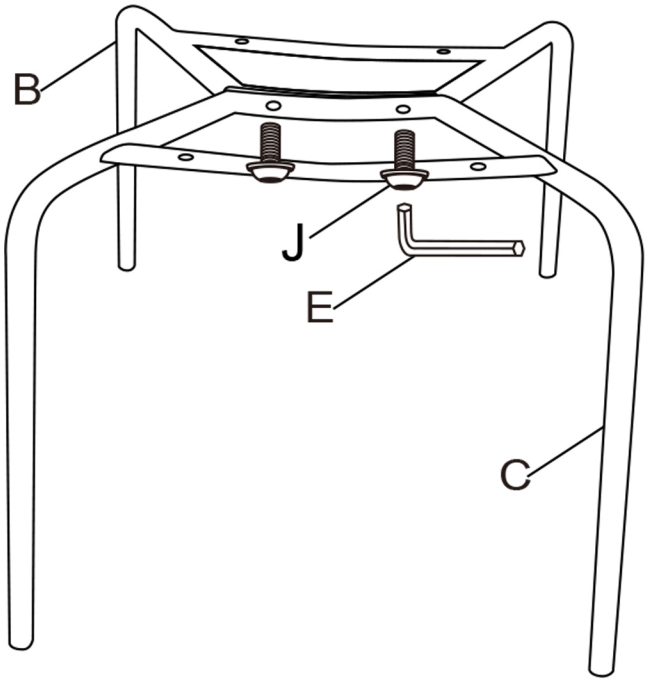

B	x1
	

C	x1
	

E	x1
	M6

J	x2
	M8×16mm

2

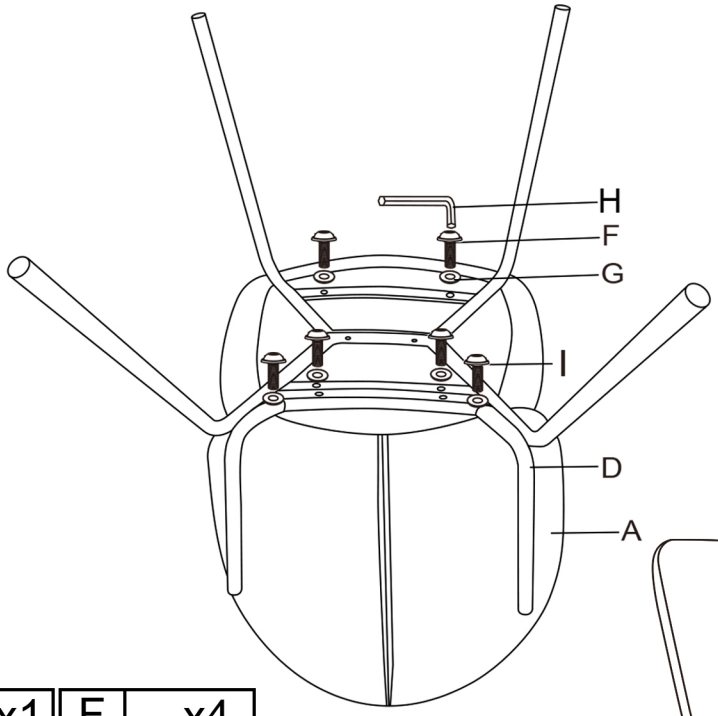

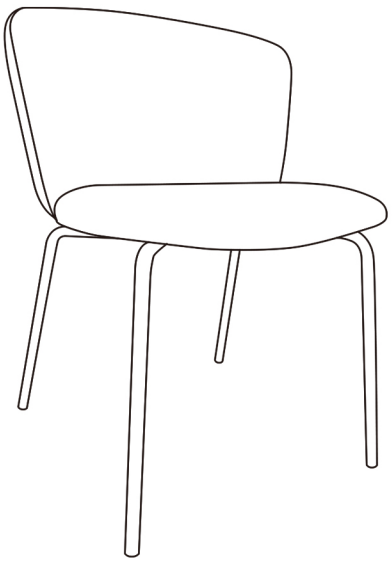

A	x1
	

D	x1
	

F	x4
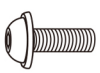	M6×20mm

G	x6
	6×16mm

H	x1
	M5

I	x2
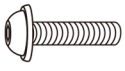	M6×35mm