| Art No | Description |
|---|---|
| 88888-2664 | SP - Maglehem Sofa Table - Glass top |
| 88888-2665 | SP - Maglehem Sofa Table - Legs Black |
| 88888-2666 | SP - Maglehem Sofa Table - Screw set |

furniture/fashion
Design by Daniel Johansson & Laila Bagge

VENTURE DESIGN
HOME & INTERIOR

# 15015-100

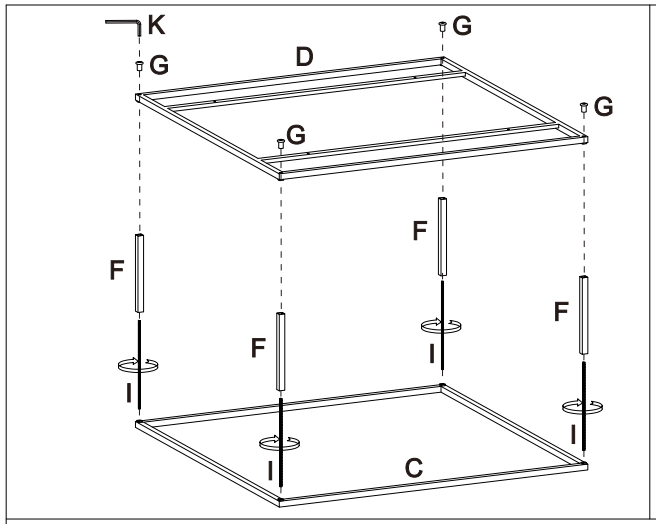


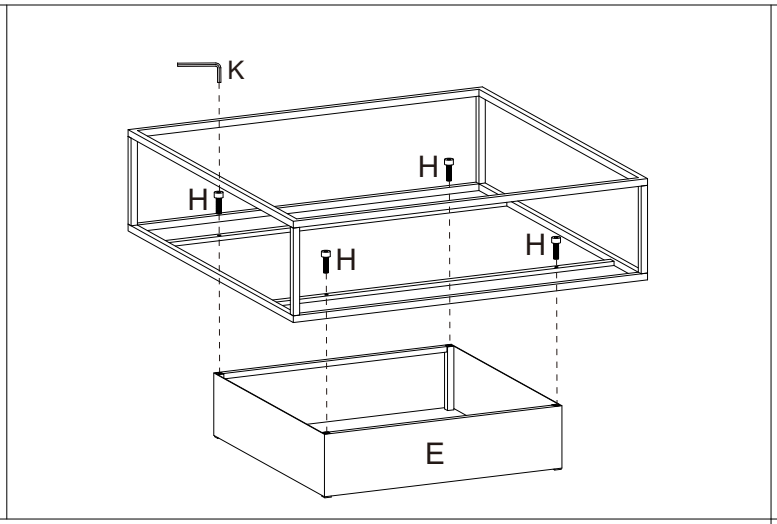


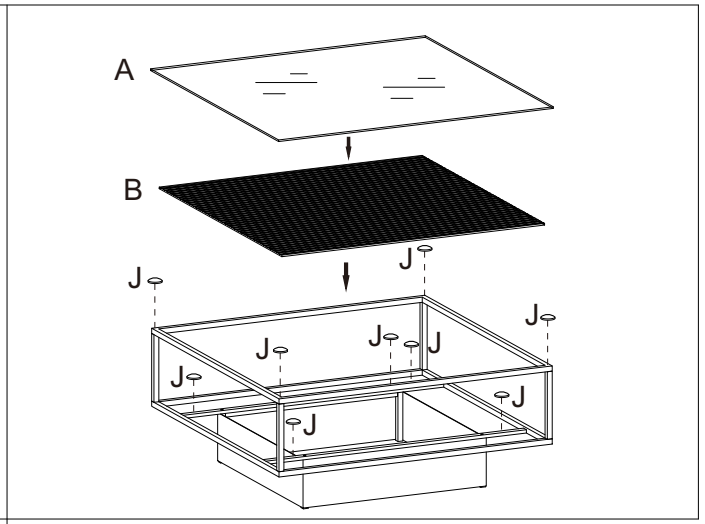


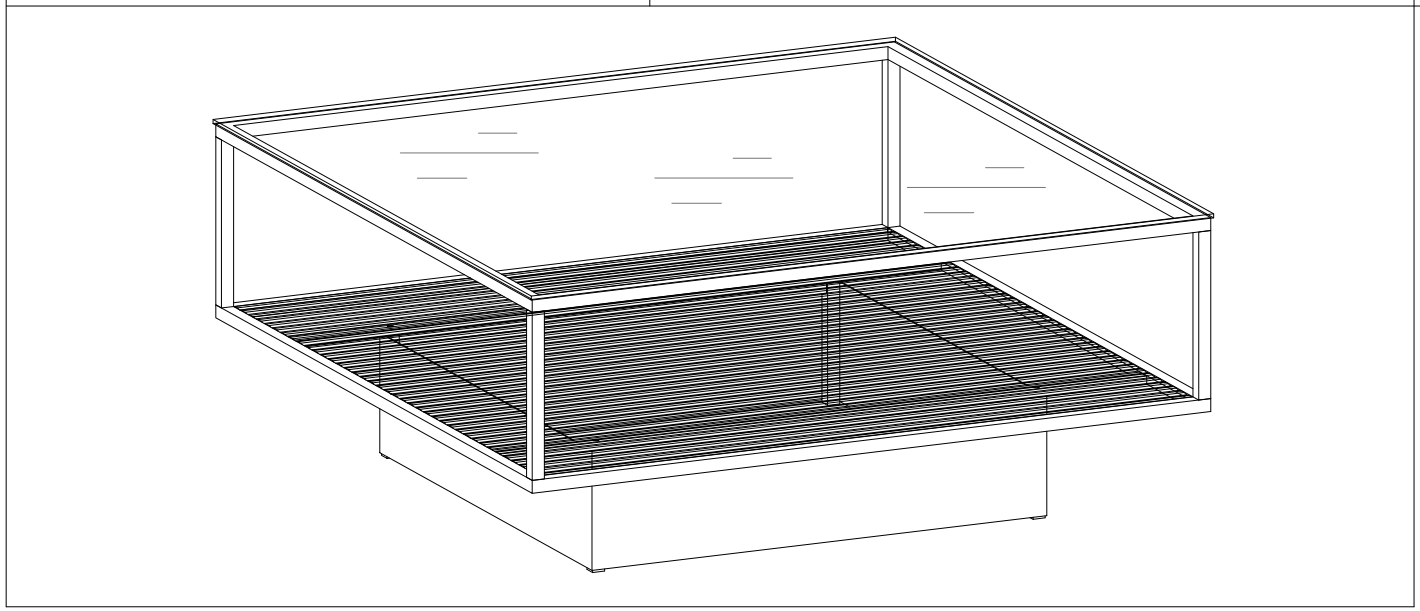

| | | | |
|---|---|---|---|
| A | | 1 | 88888-2664 |
| B | | 1 | |
| C | | 1 | 88888-2665 |
| D | | 1 | 88888-2665 |
| E | | 1 | 88888-2665 |
| F | | 4 | 88888-2665 |
| G | | 4 | 88888-2666 |
| H | | 4 | 88888-2666 |
| I | | 4 | 88888-2666 |
| J | | 8 | 88888-2666 |
| K | | 1 | 88888-2666 |