A

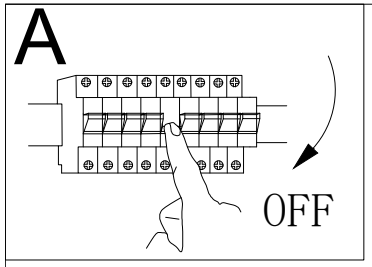

B

Collett's Monde

81811045-01
81811045-03

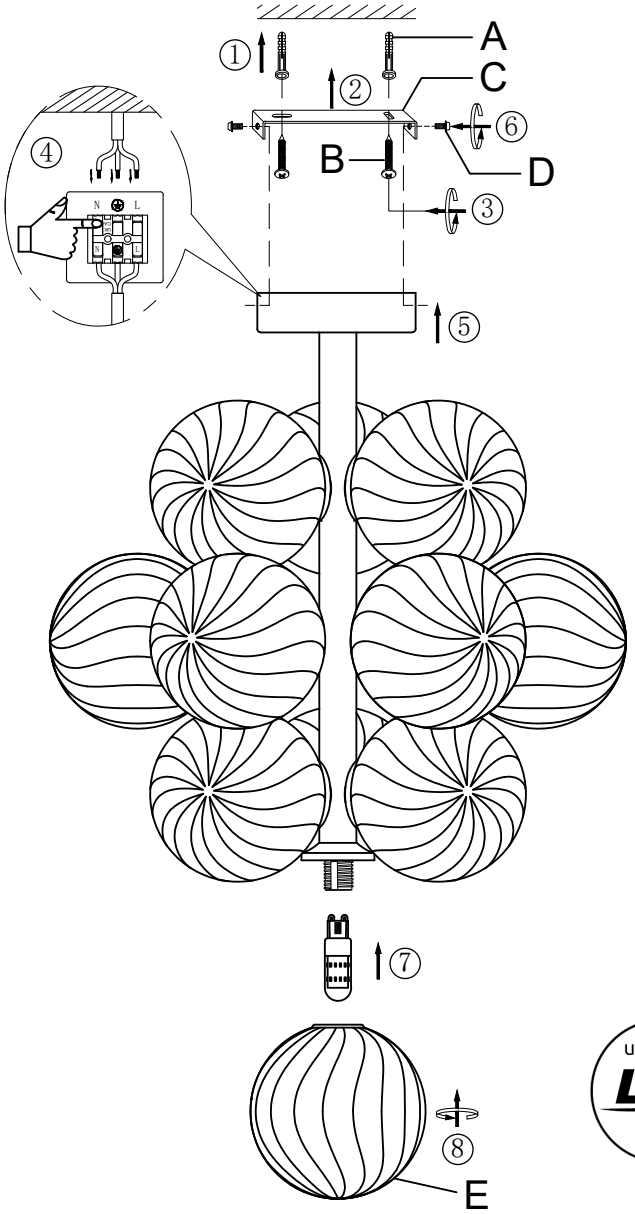

spare parts		
code	part	
A		x 2
B		x 2
C		x 1
D		x 2
E	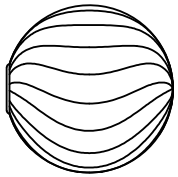	x 13

excl. 13 x LED G9 max. 4W
230V~ 50Hz

BDSK Handels GmbH & Co KG,
Mergentheimer Straße 59,
97084 Würzburg, Germany.
www.xxxlutz.com
info@xxxlutz.at

use only LED
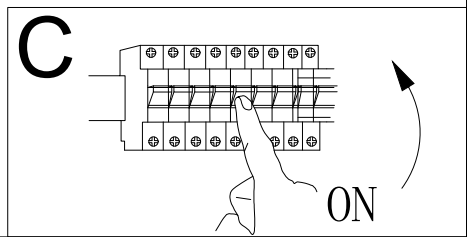
C