BDSK Handels GmbH & Co. KG
Mergentheimer Straße 59
DE-97084 Würzburg Germany
E-mail:info@xxxlutz.at

79680377-01
79680377-02
COUCHTISCH

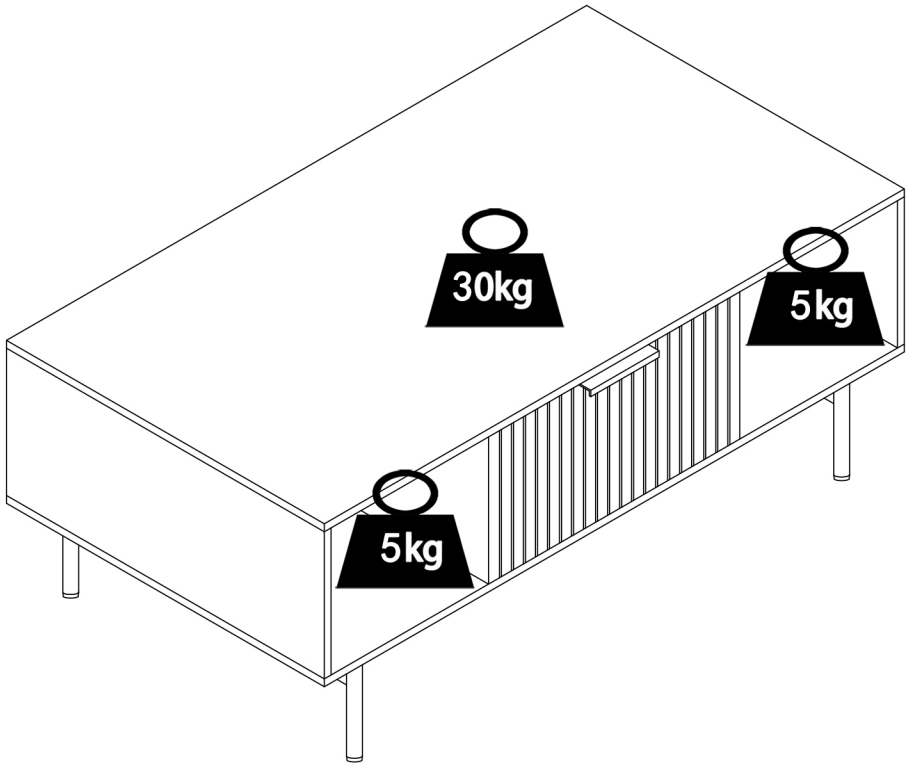

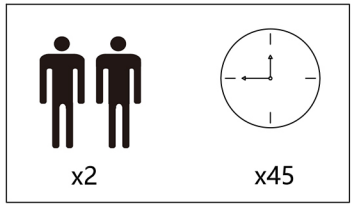

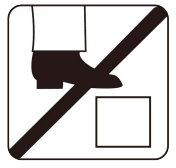



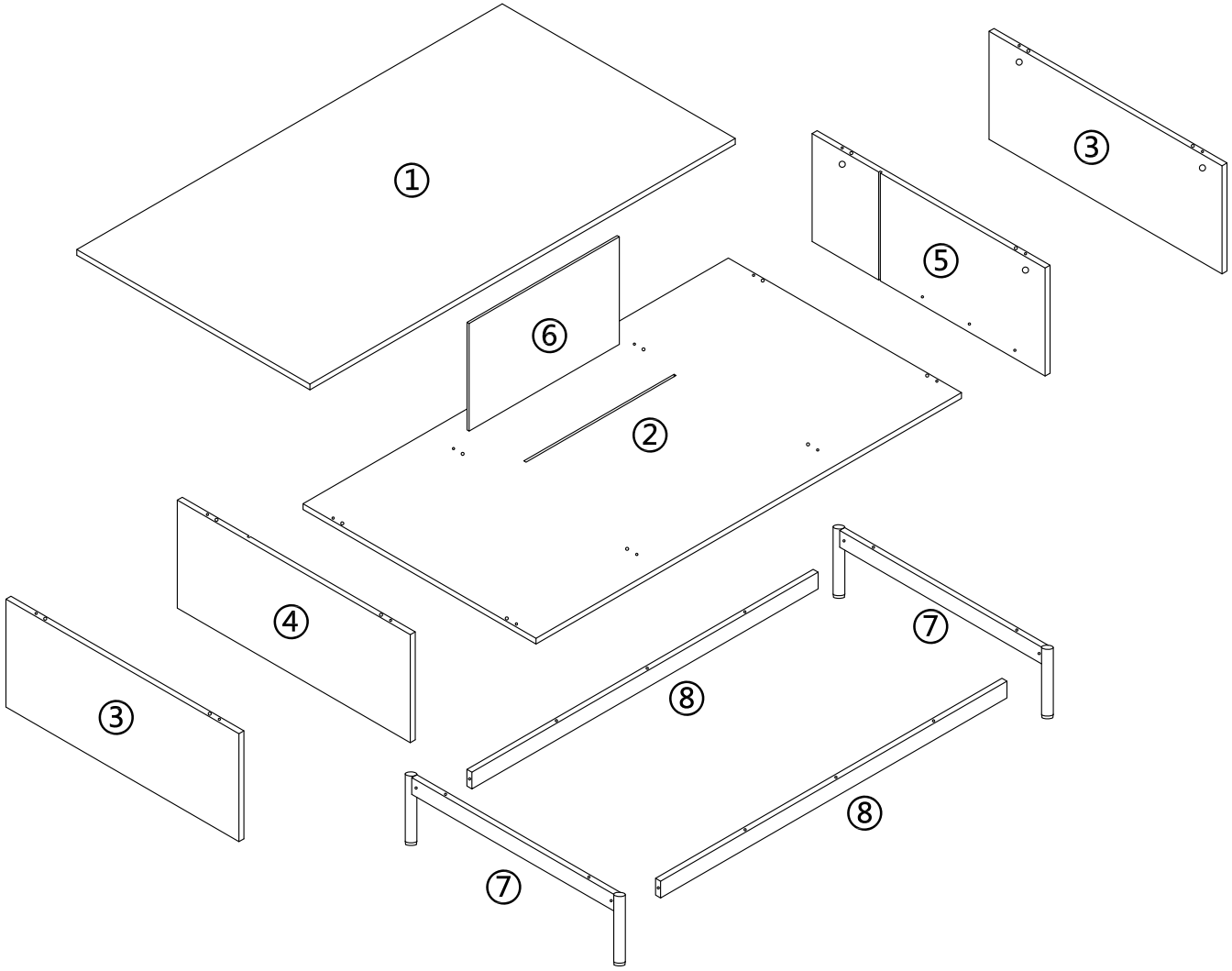
①
③
⑤
⑥
②
④
③
⑦
⑧
⑧
⑦

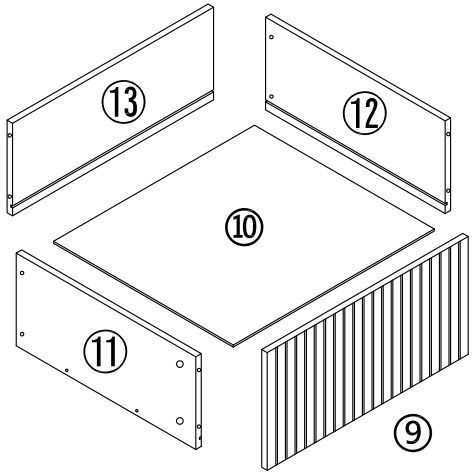
⑬
⑫
⑩
⑪
⑨

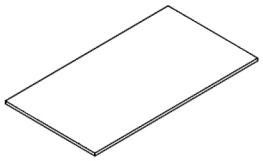	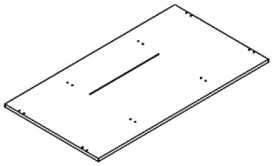	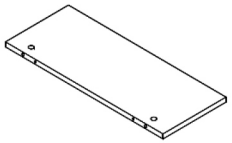	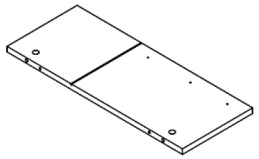	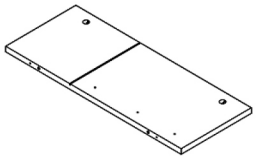
① x1	② x1	③ x2	④ x1	⑤ x1
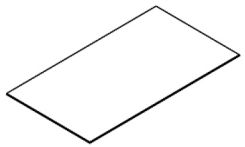	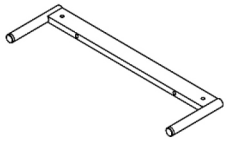	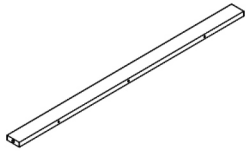	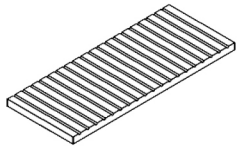	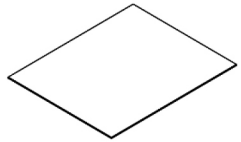
⑥ x1	⑦ x2	⑧ x2	⑨ x1	⑩ x1
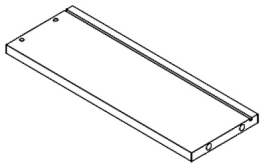	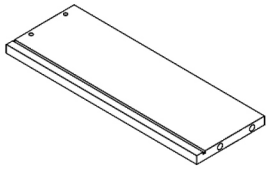	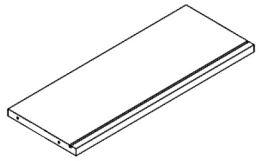	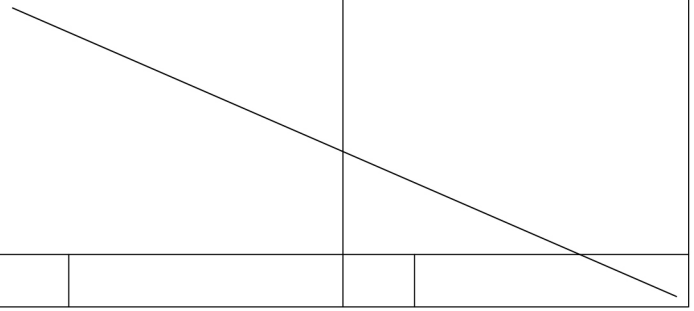	
⑪ x1	⑫ x1	⑬ x1		

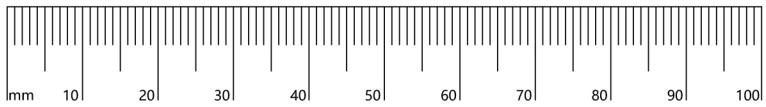

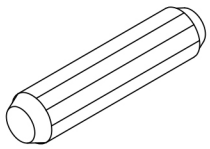 D6X30mm	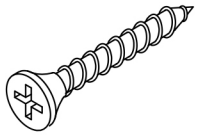 D4X35mm	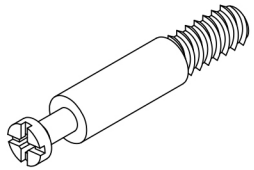 D6X35mm	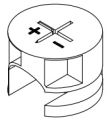	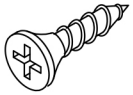 D3X12mm
Ⓐ x16	Ⓑ x12	Ⓒ x12	Ⓓ x12	Ⓔ x12
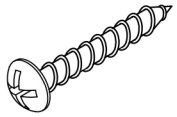 D4X40mm	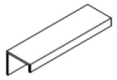	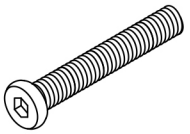 D6X35mm	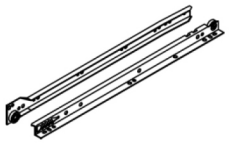	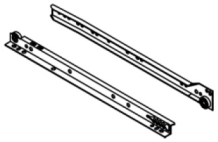
Ⓕ x10	Ⓖ x1	Ⓗ x4	Ⓘ x1	Ⓙ x1
	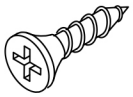 D3X14mm	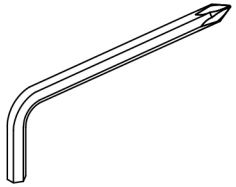	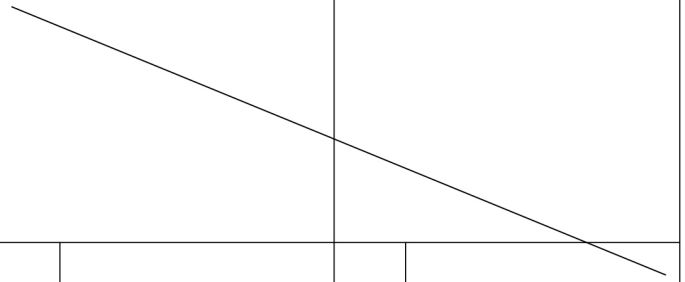	
Ⓚ x4	Ⓛ x4	Ⓜ x1		

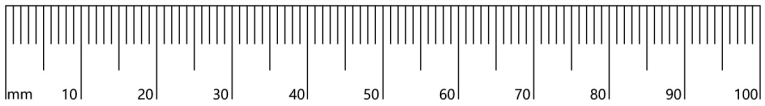

01

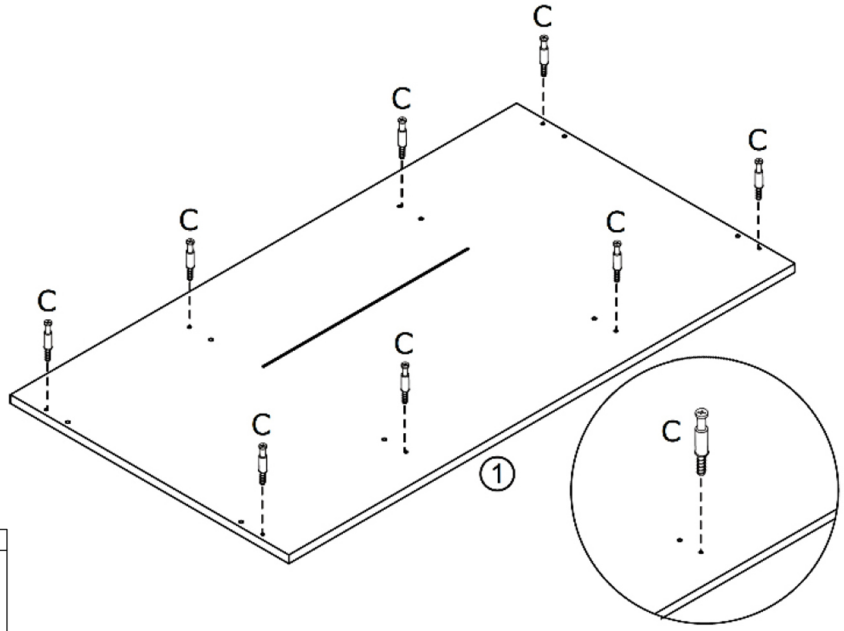

C x8
D6X35mm

02

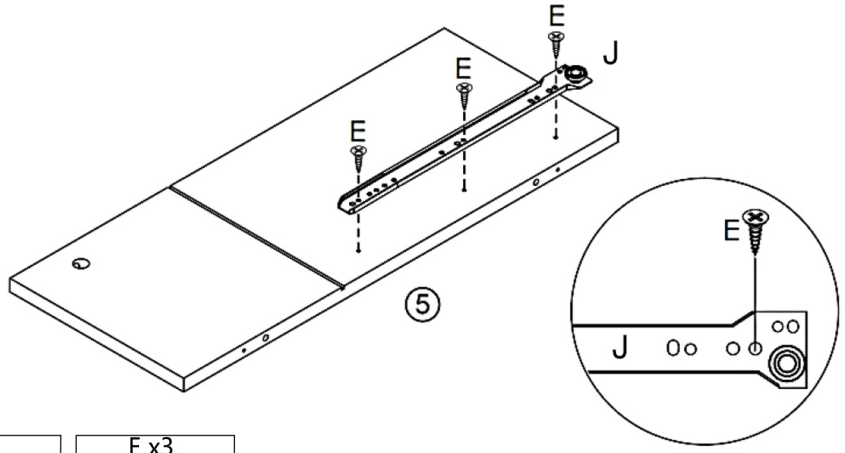

J x1	E x3
	D3X12mm

03

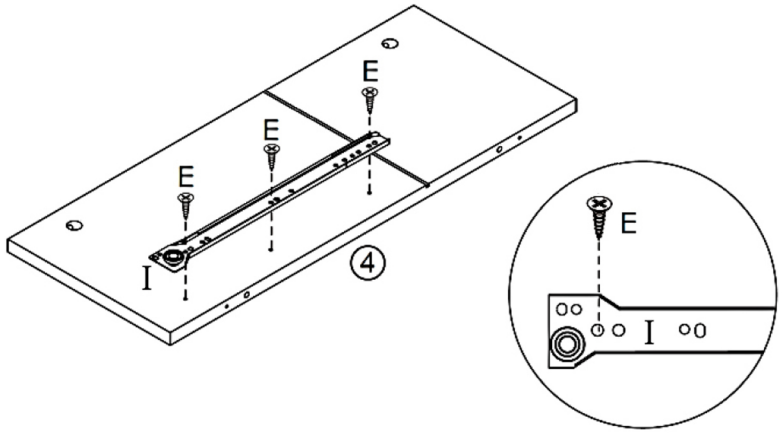

I x1	E x3
	D3X12mm

04

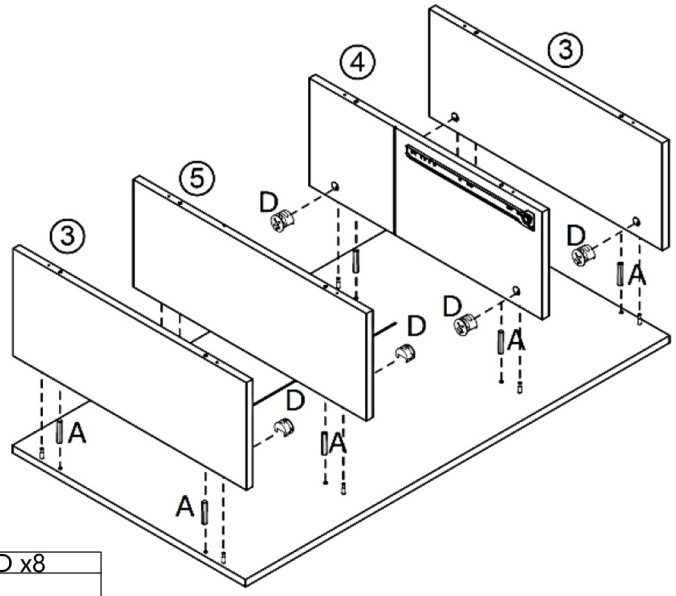

A x8	D x8
D6X30mm	

05

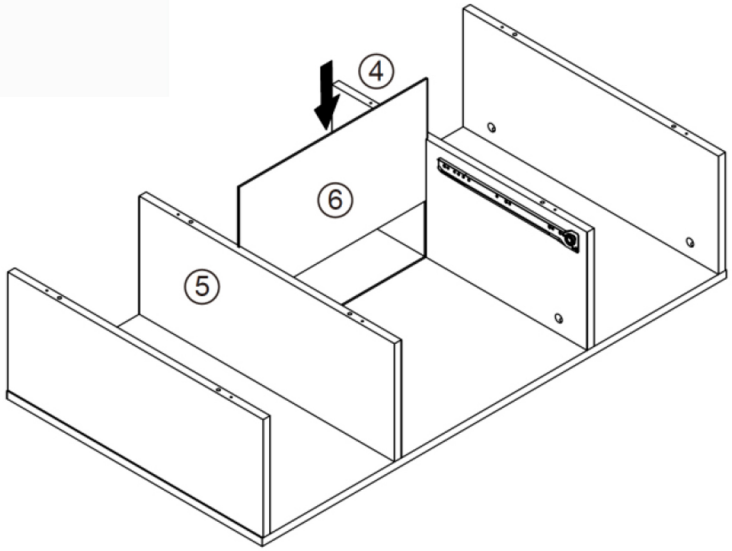

06

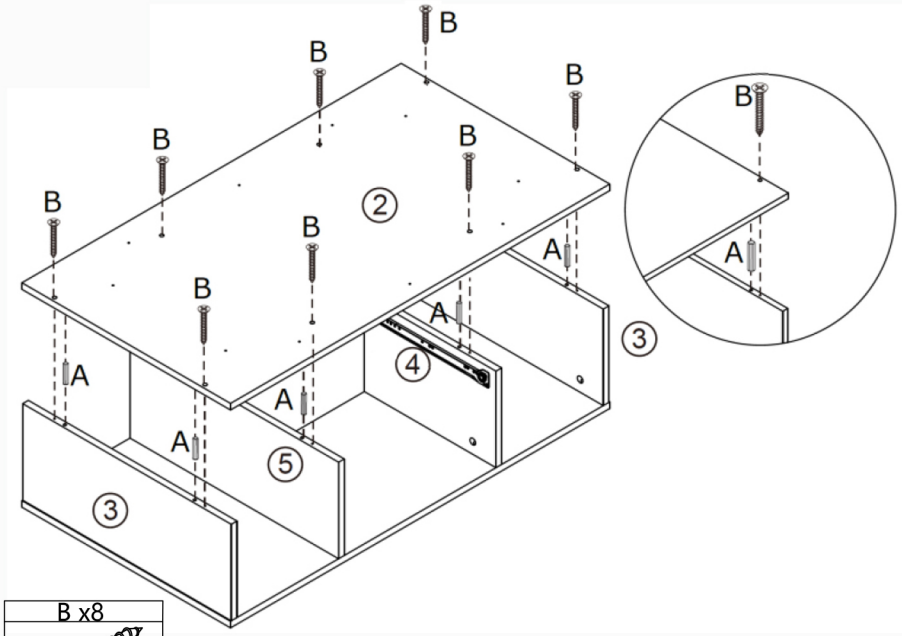

A x8	B x8
	
D6X30mm	D4X35mm

07

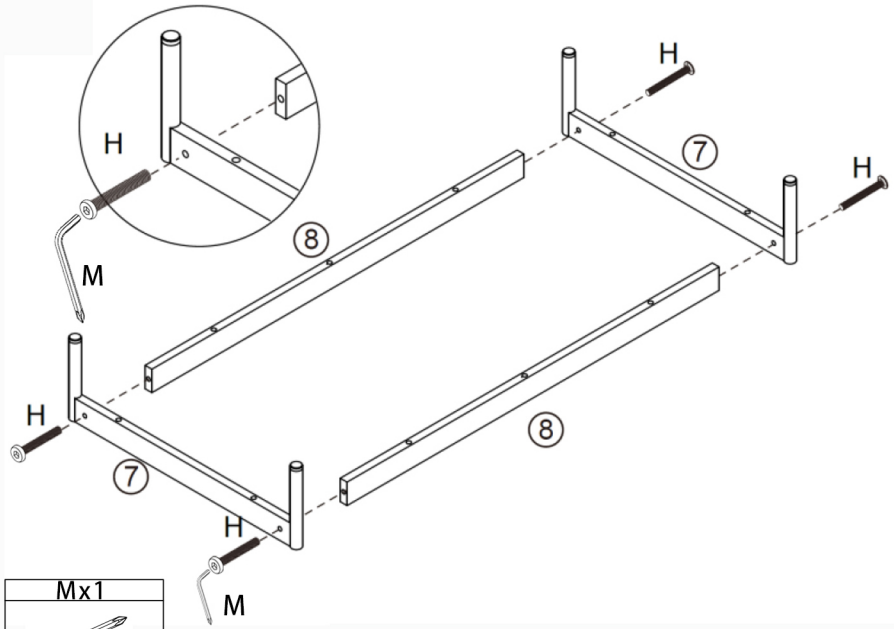

H x4	M x1
	
D6X35mm	

08

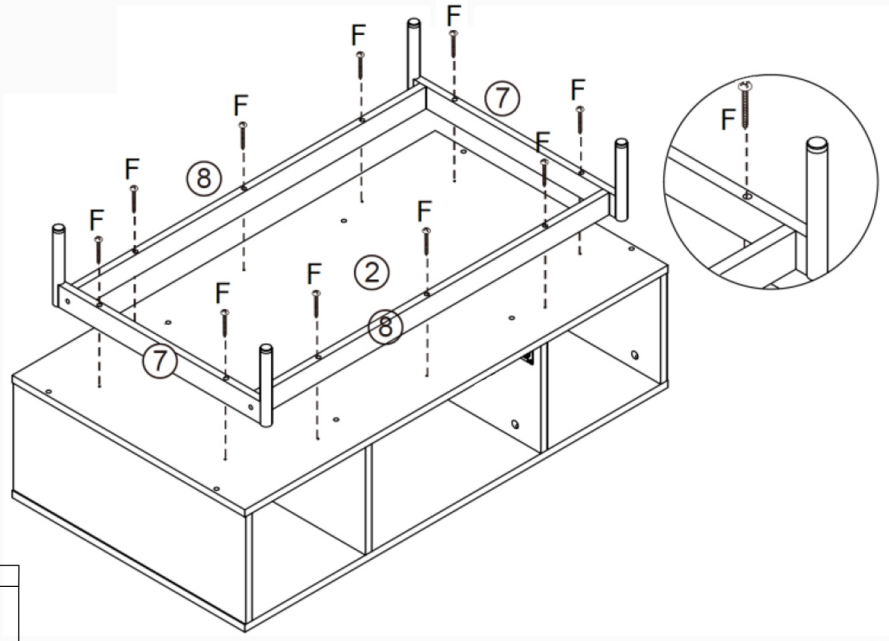

F x10

D4X40mm

09

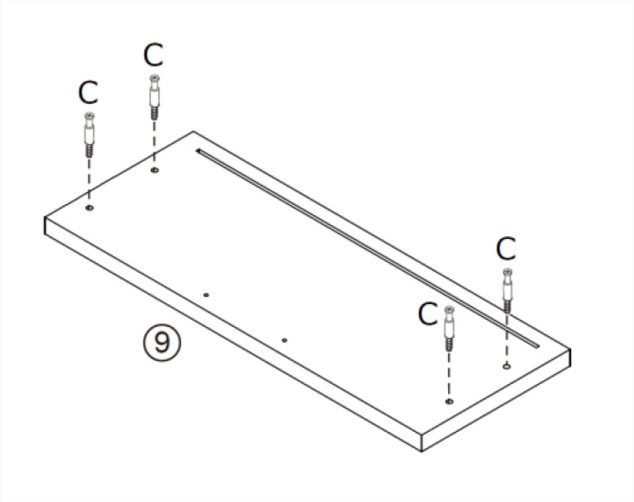

C x4



D6X35mm

10

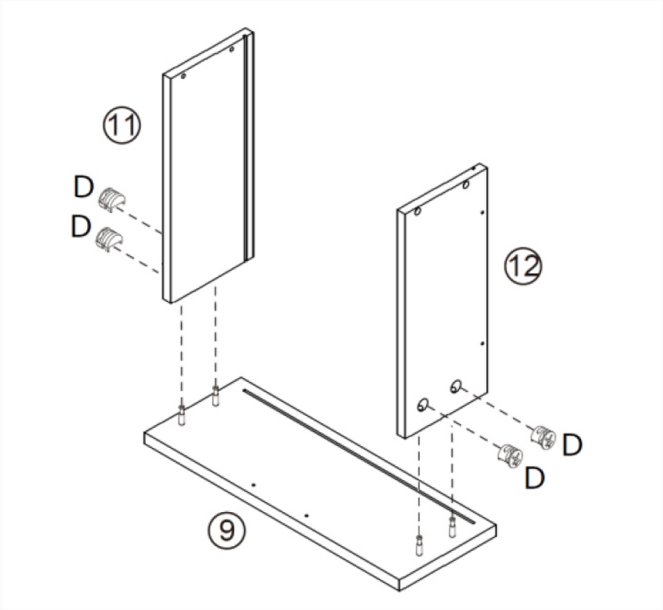

D x4



11

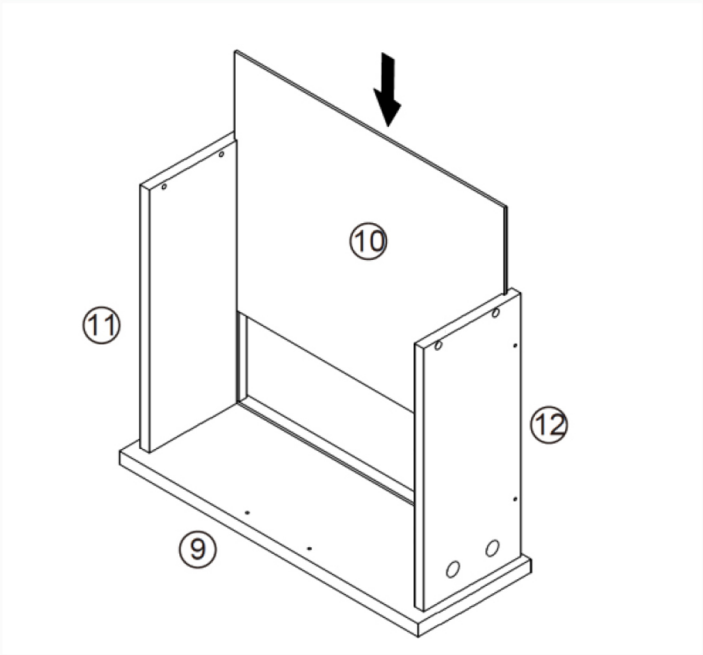

12

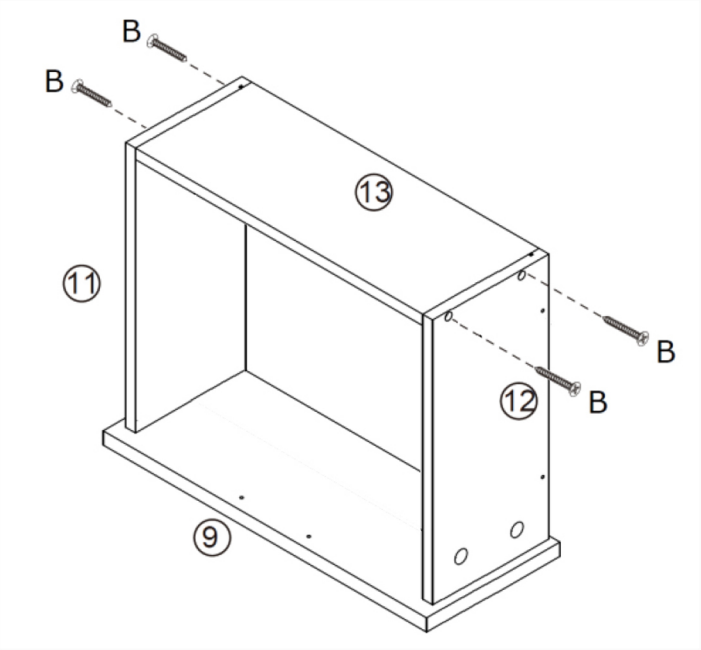

B x4



D4X35mm

13

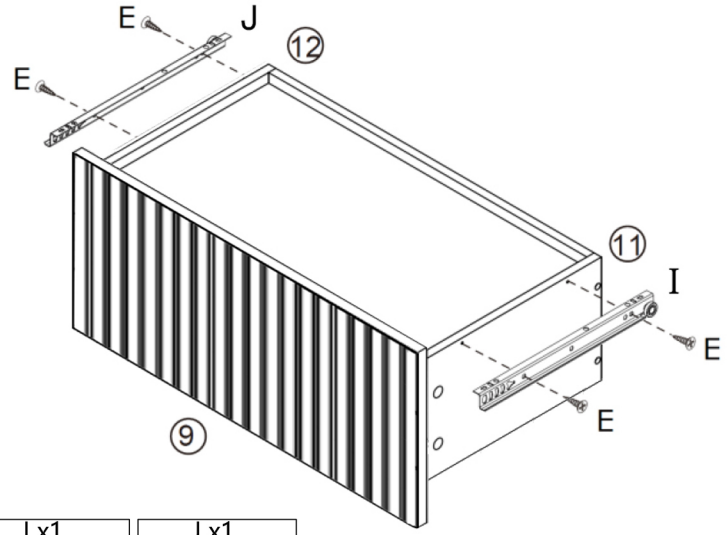

E x4	I x1	J x1
D3X12mm		

14

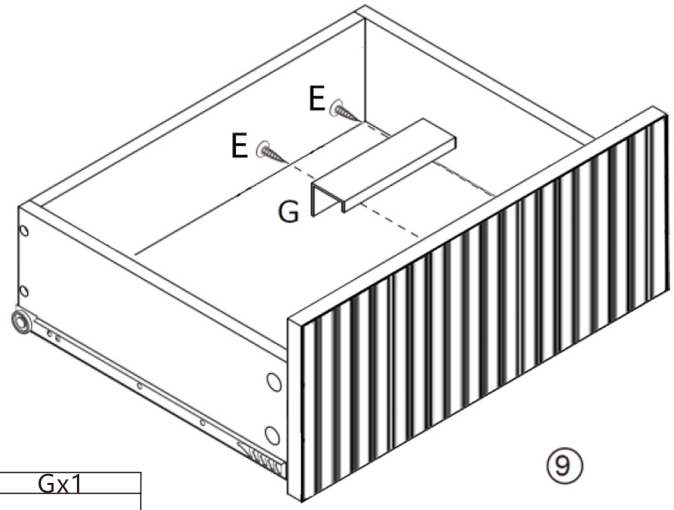

E x2	Gx1
D3X12mm	

15

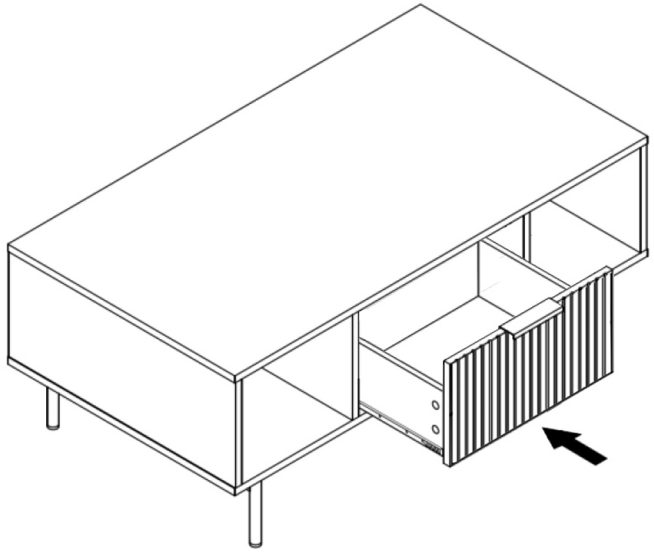

16

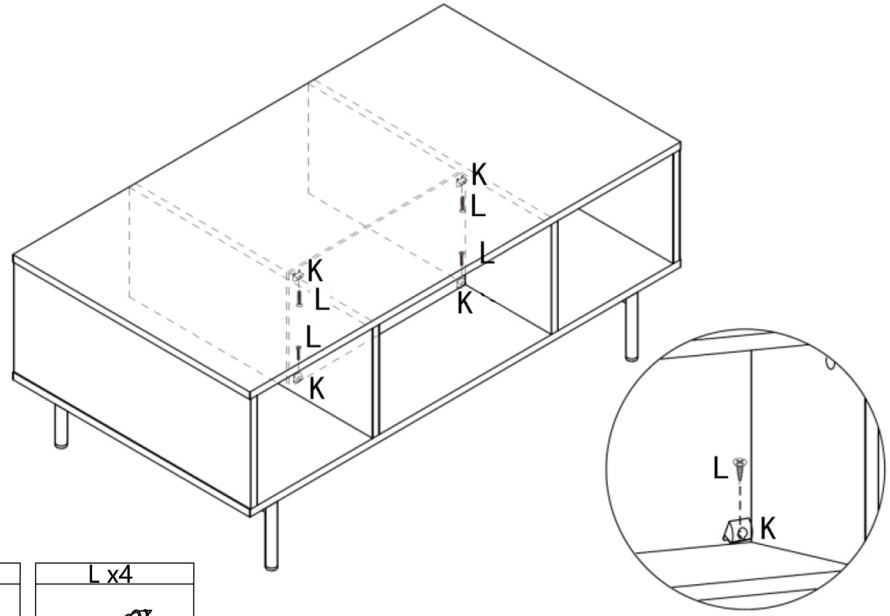

K x4	L x4
	D3X12mm