

Boxbett Artena

Article number

Part number	Package
A, E, F	1/3
B	2/3
C	3/3
D	3/3

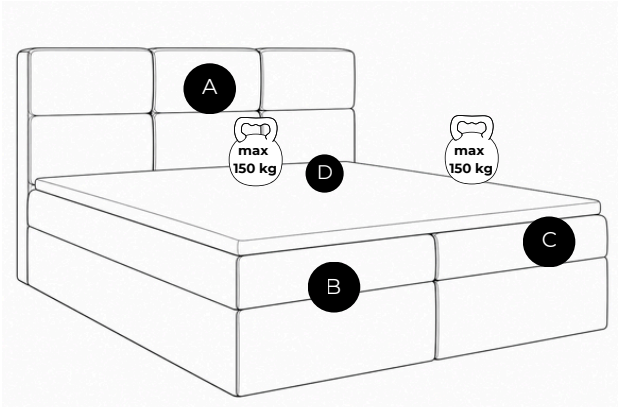

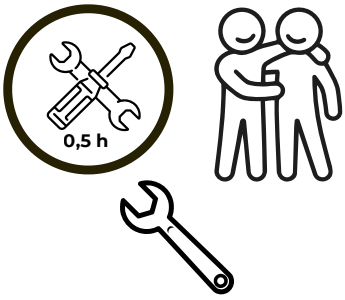

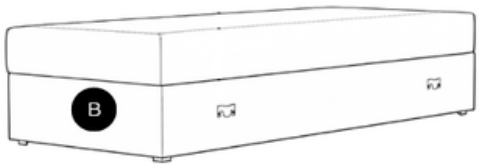



M6X70	Quantity	Symbol	Length
	X8	E	7,2 cm
	X8	F	1,3 cm

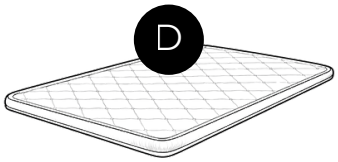

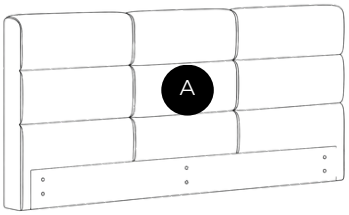

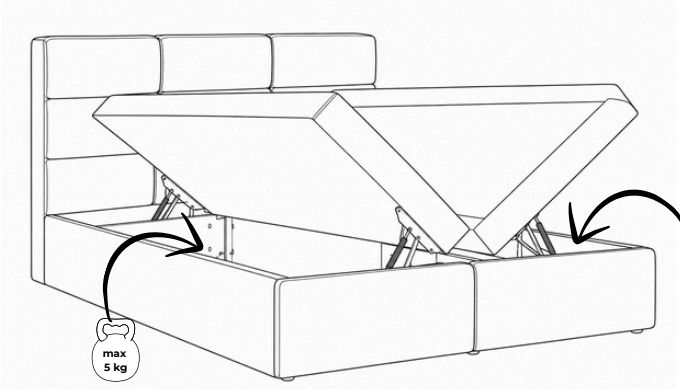

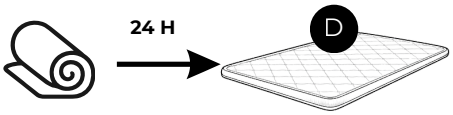



1.

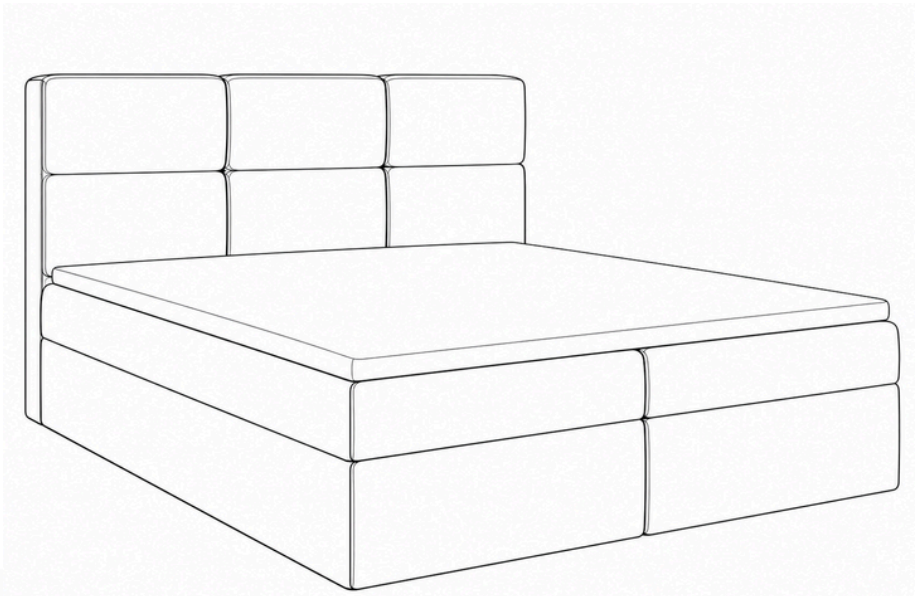

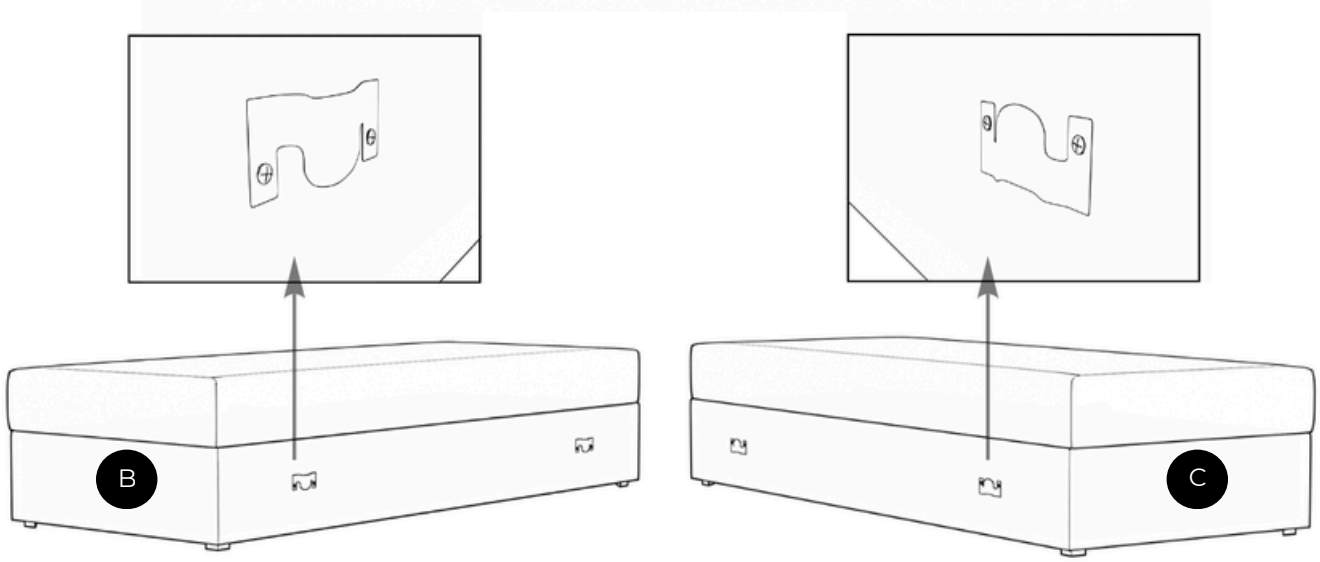

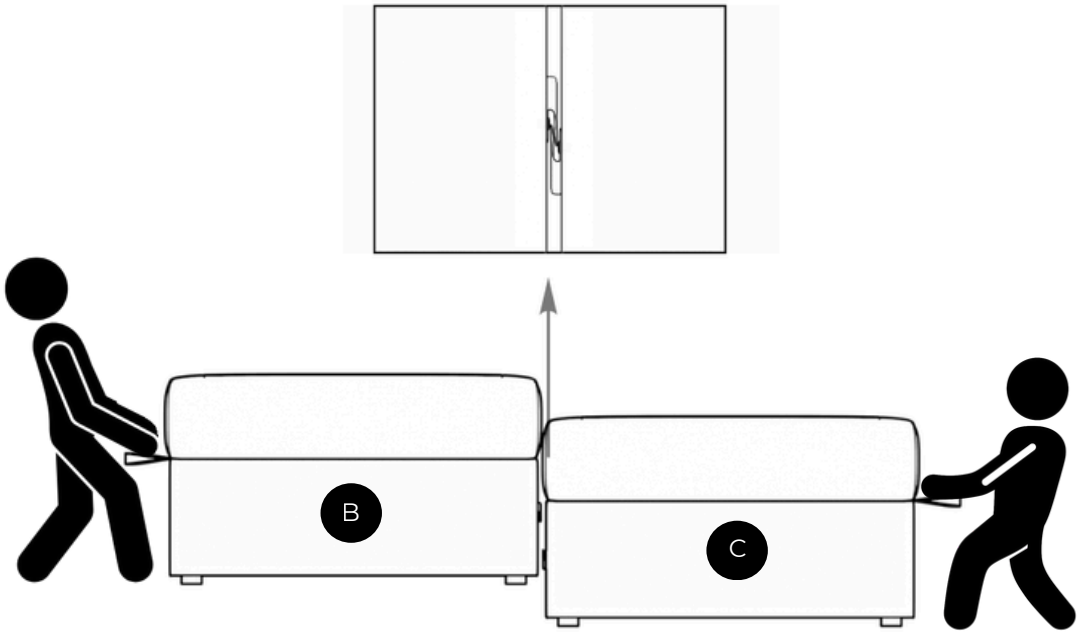

2.

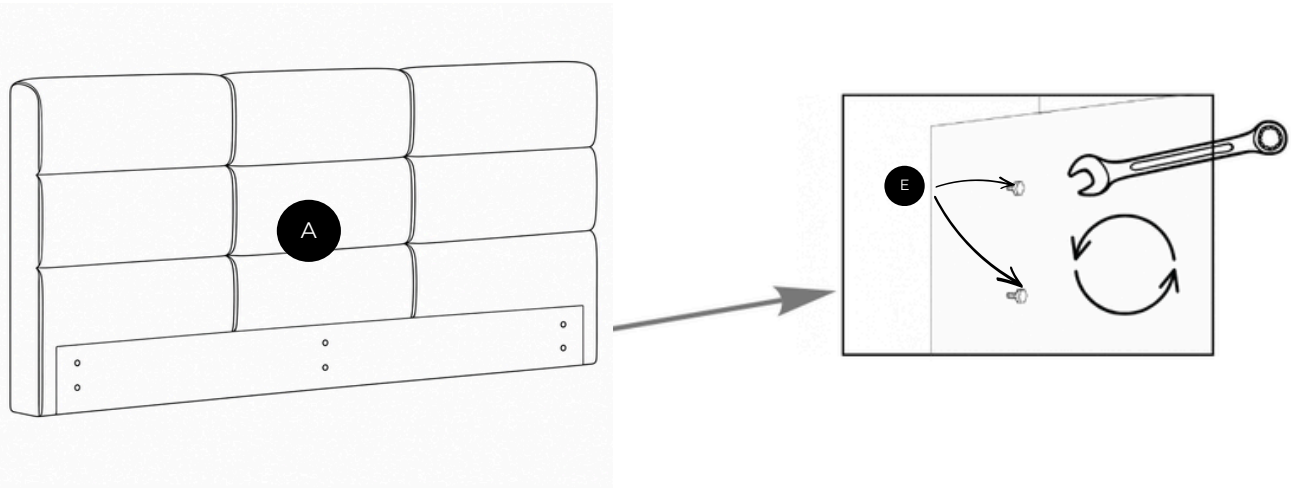

3.

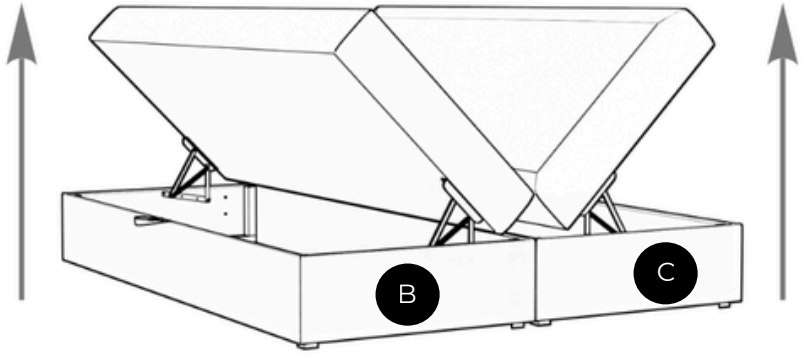



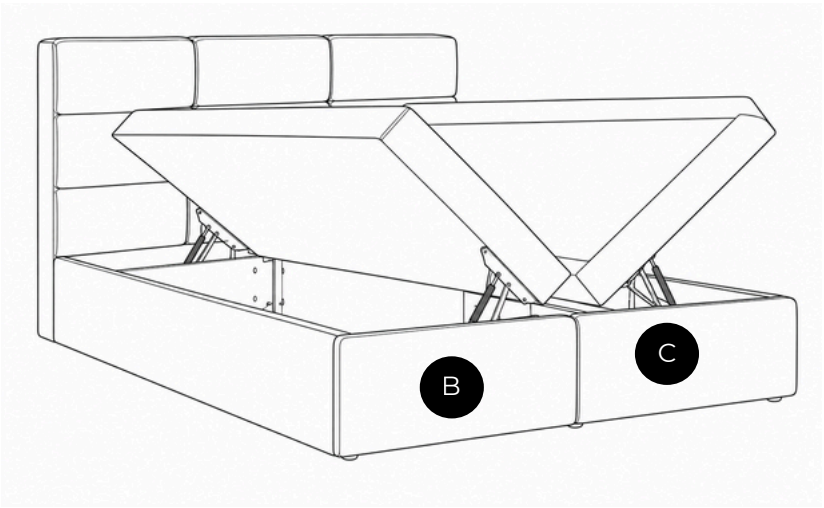

4.

