15000018-01/02/03/04 Assembly Instruction

	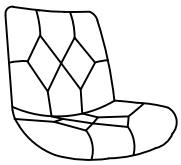 ①X1	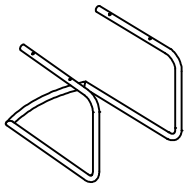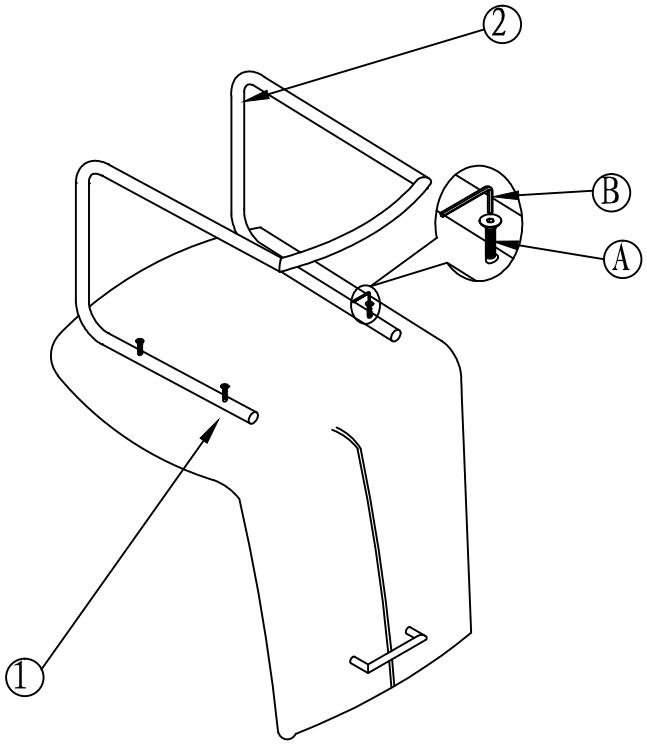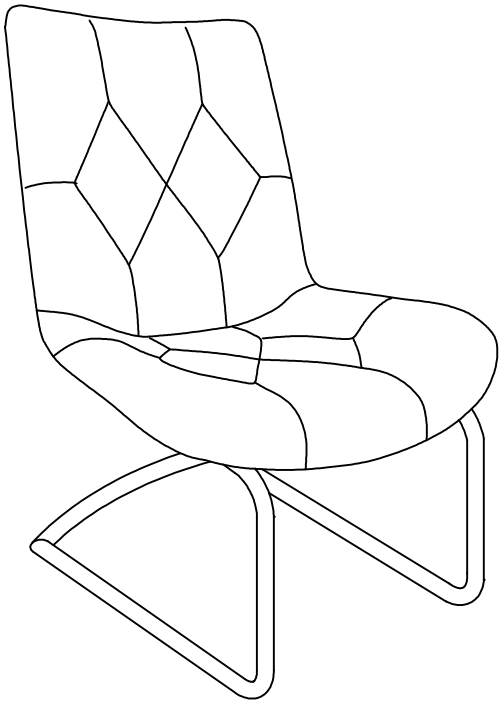 ②X1
	Ⓐ X4 M6X50mm	Ⓑ X1 4#