17130167-01
SIDEBOARD

BDSK Handels GmbH & Co.KG
Mergentheimer Straße 59
DE-97084 Würzburg
E-Mail:Info@xxxlutz.at

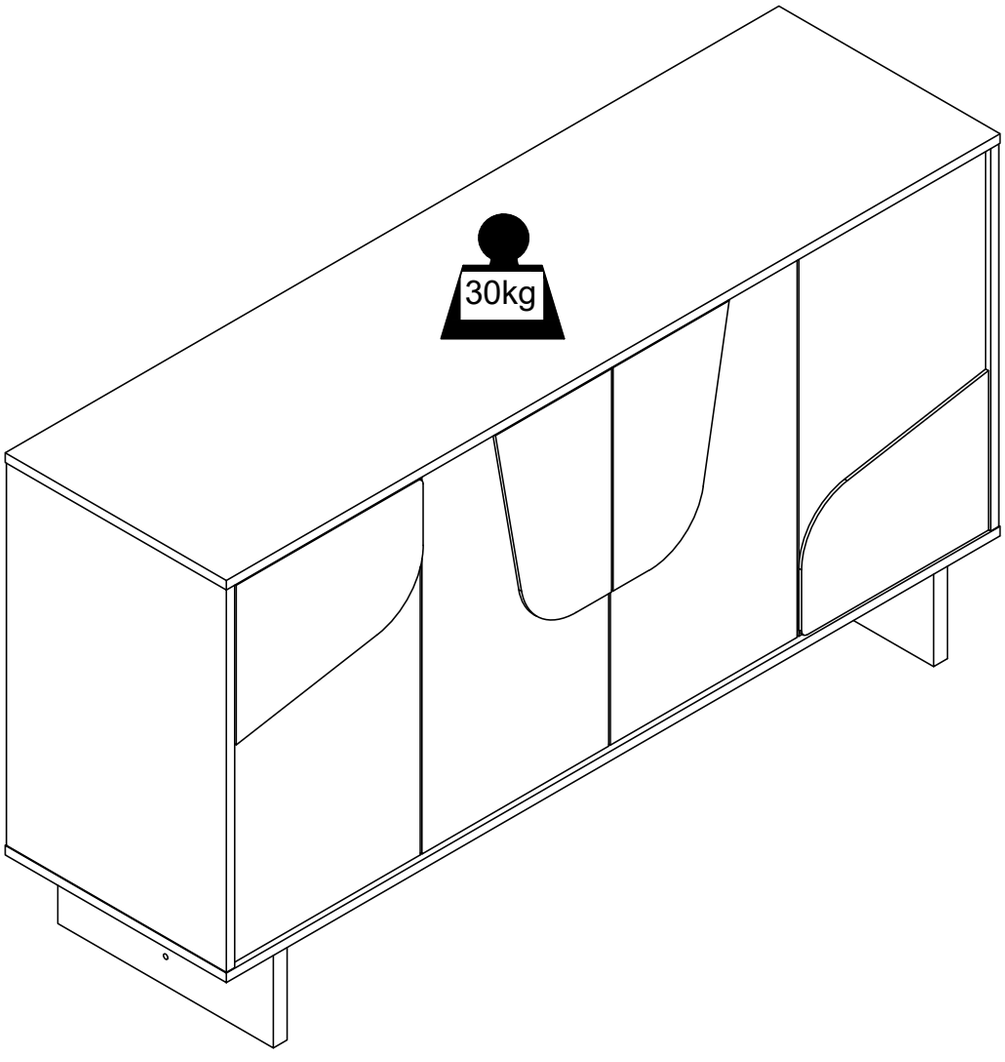

22
PAP

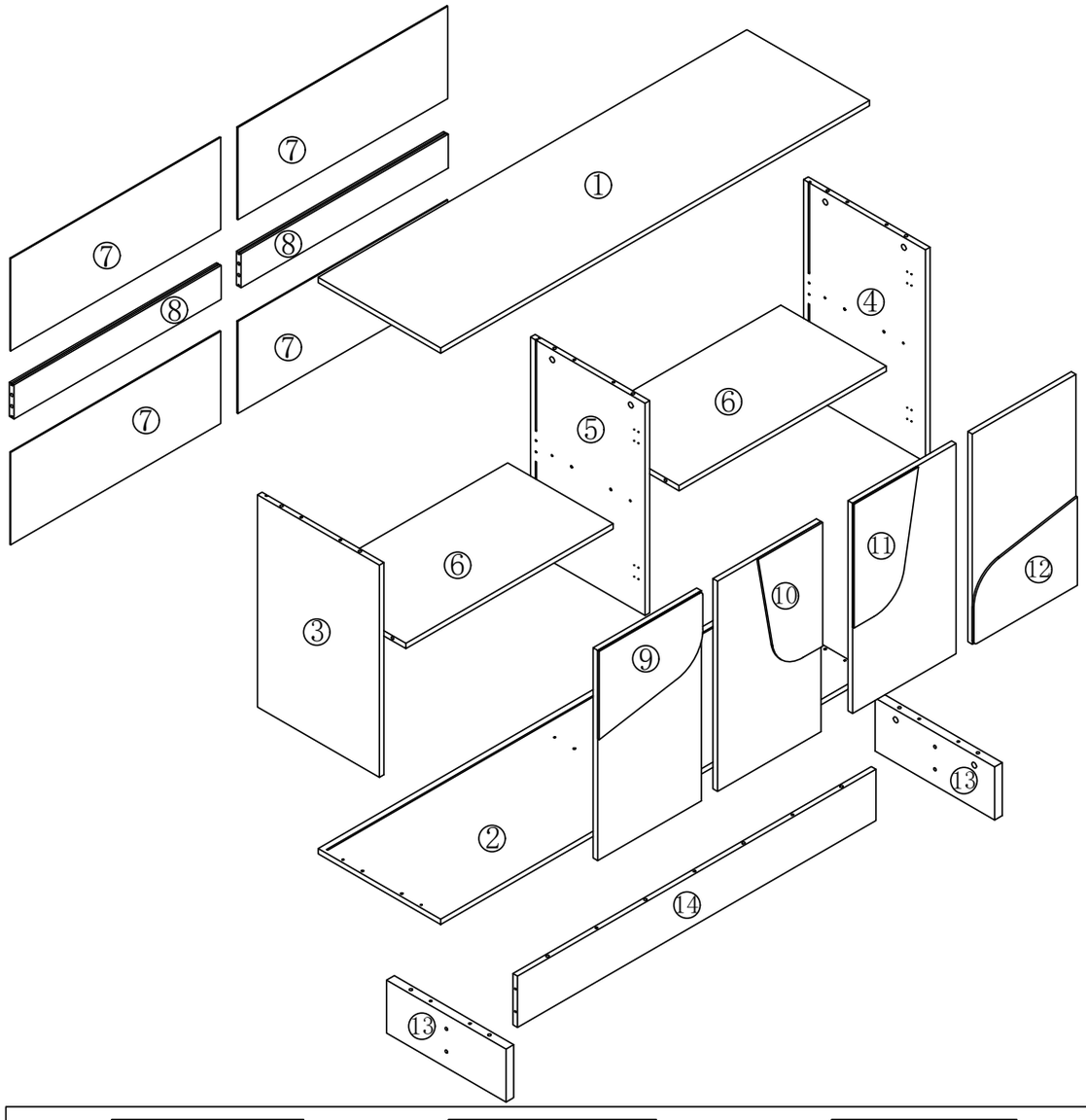

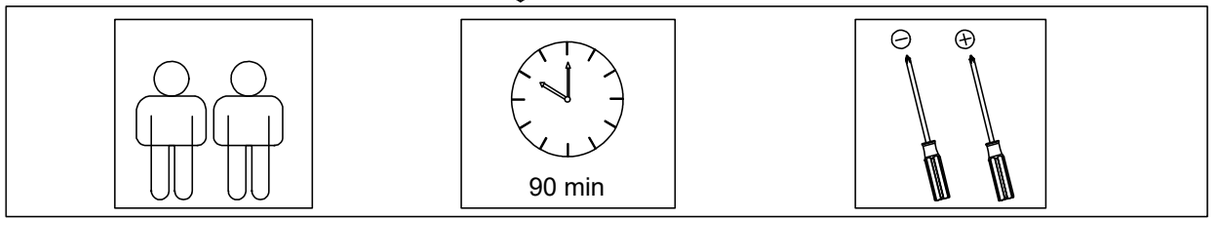

A ×30	B ×30	C ×23	D ×8	E ×70	F ×16	G ×2
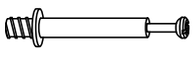		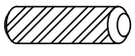	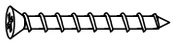		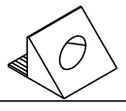	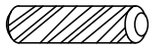
M6x35MM	φ15x10	Φ6x30	M4x40MM	M3.5x14MM		Φ6x50

H ×4	I ×6	J ×2	K ×4	L ×2	M ×4	N ×1
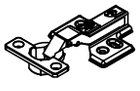			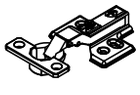	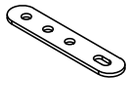	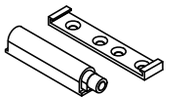	

O ×4	P ×1	R ×12	S ×4
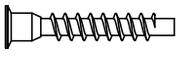			
M7x50MM		M3x14MM	

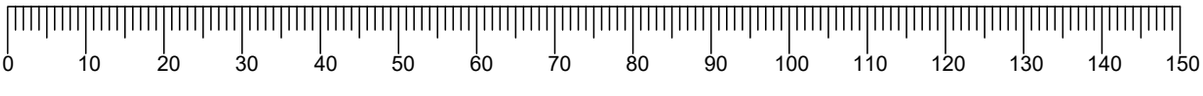

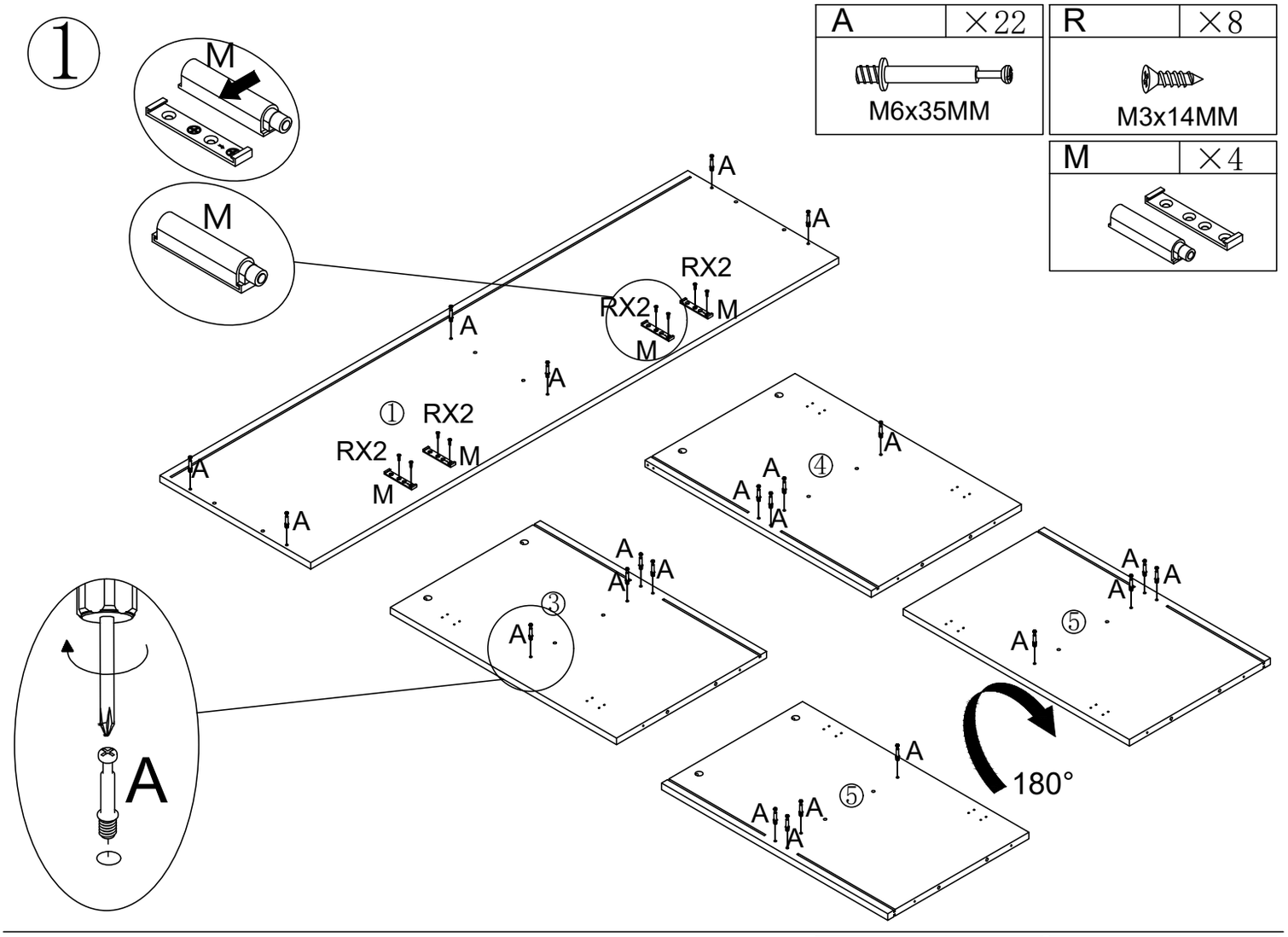
①
A ×22
M6x35MM
R ×8
M3x14MM
M ×4
M
M
A
RX2
RX2
M
①
④
③
⑤
⑤
180°
A

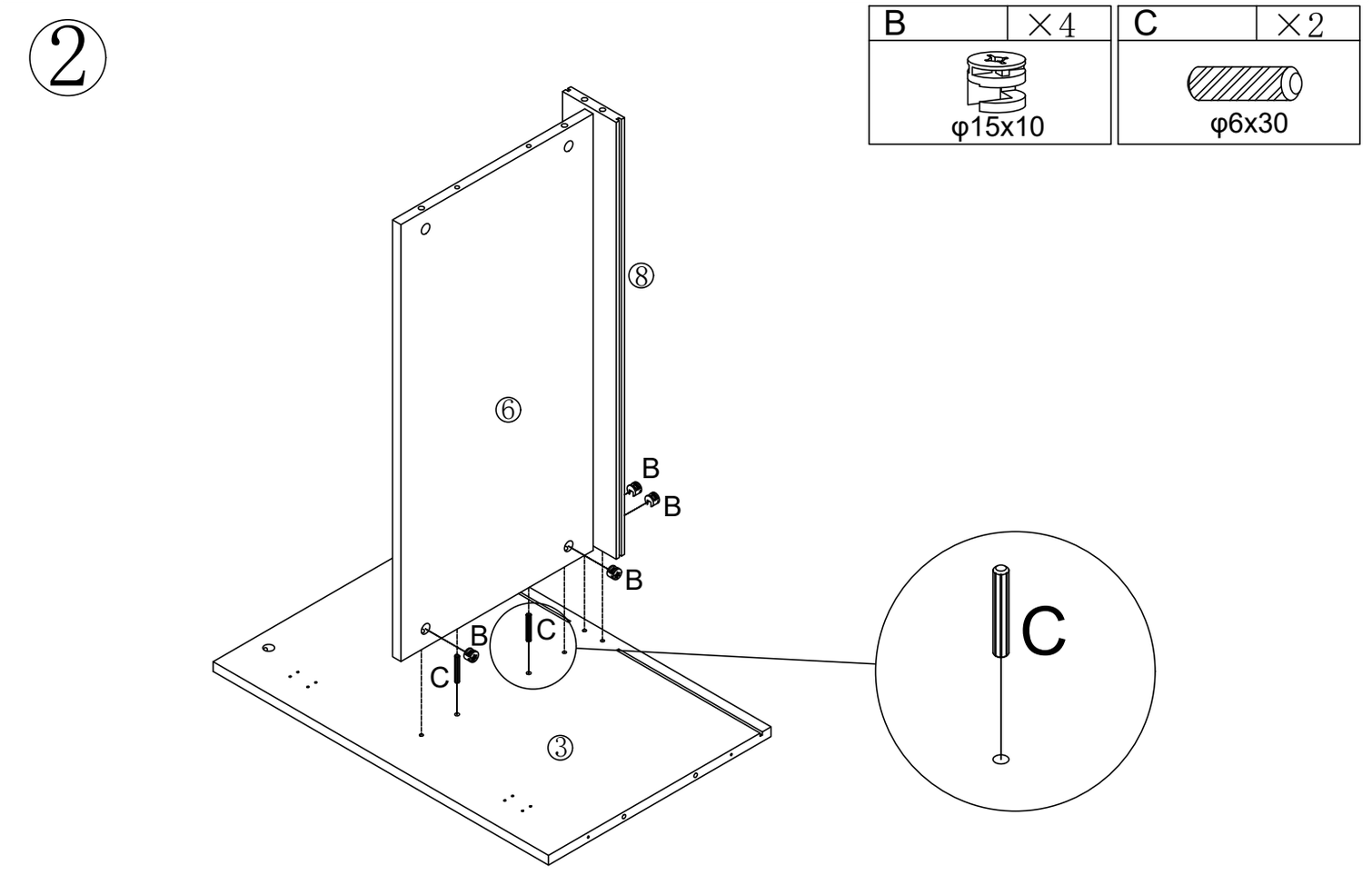
②
B ×4
φ15x10
C ×2
φ6x30
⑧
⑥
B
C
③
C

③

B	×4
φ15x10	

G	×2
φ6x50	

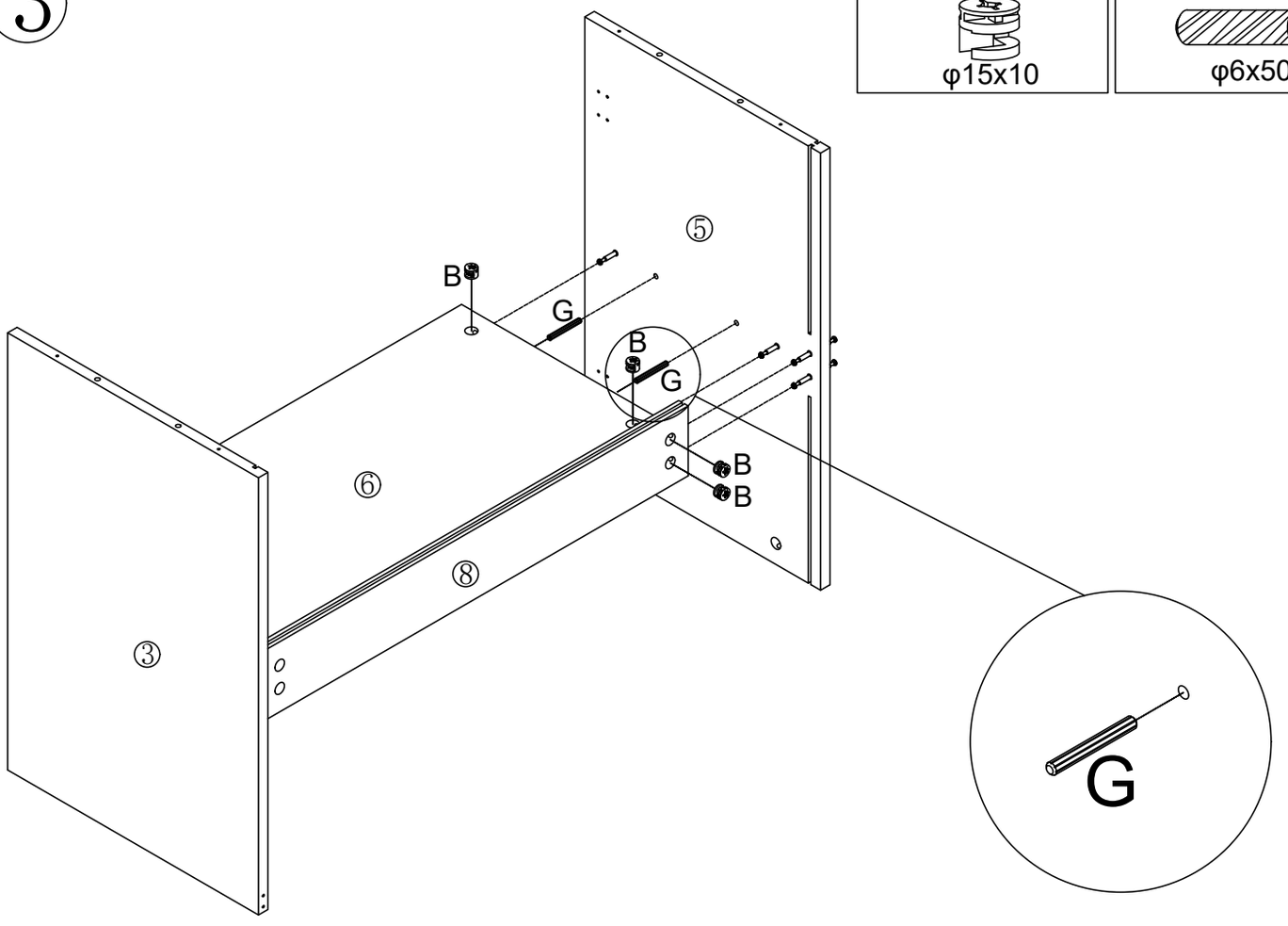

④

B	×4
φ15x10	

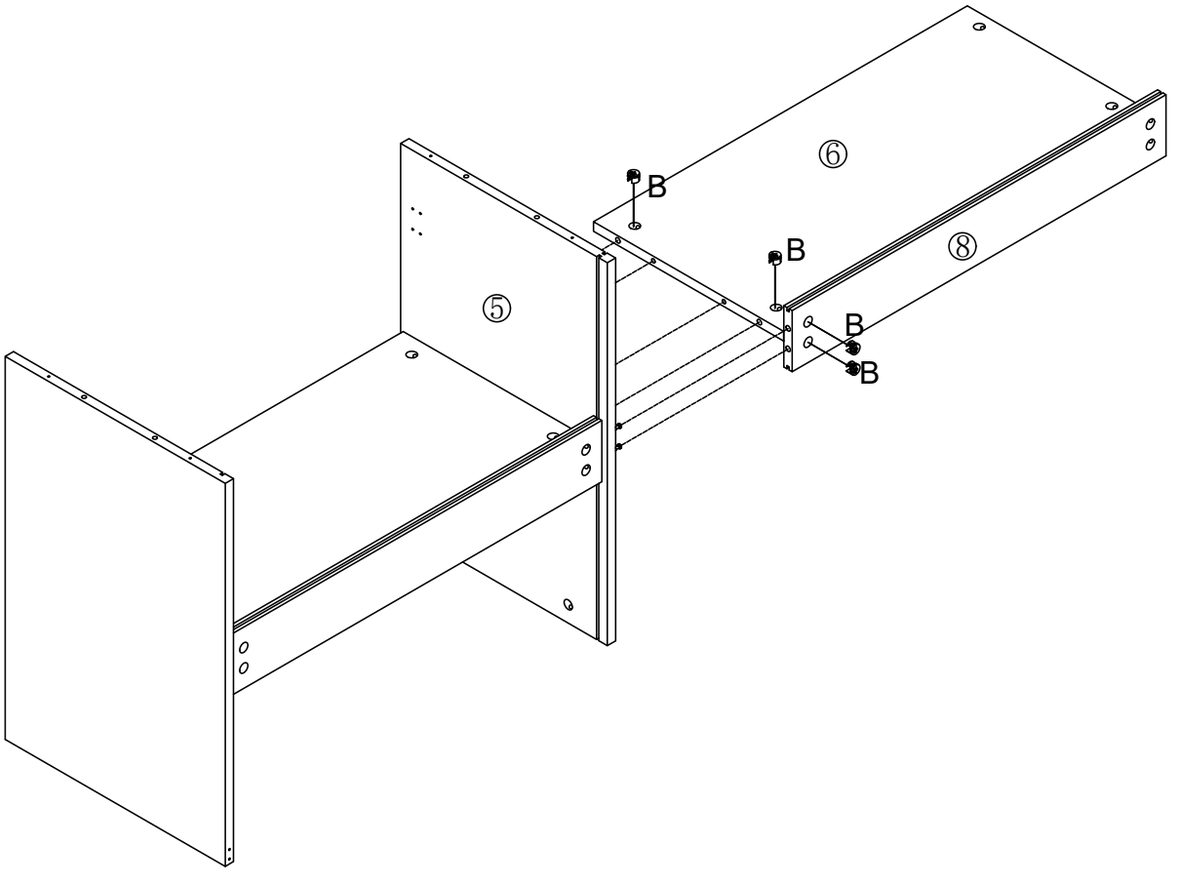

5

B	×4
φ15x10	

C	×2
φ6x30	

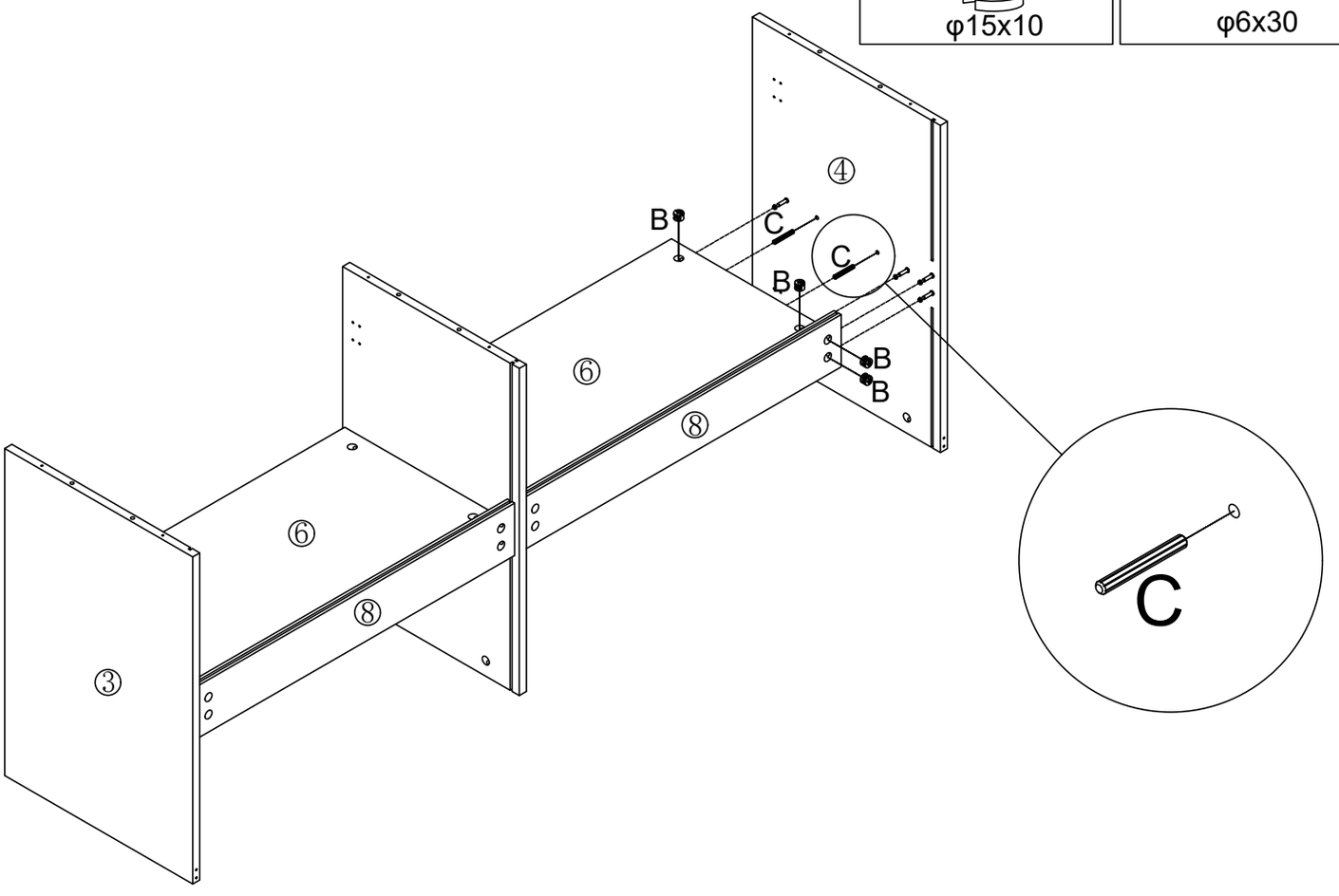

6

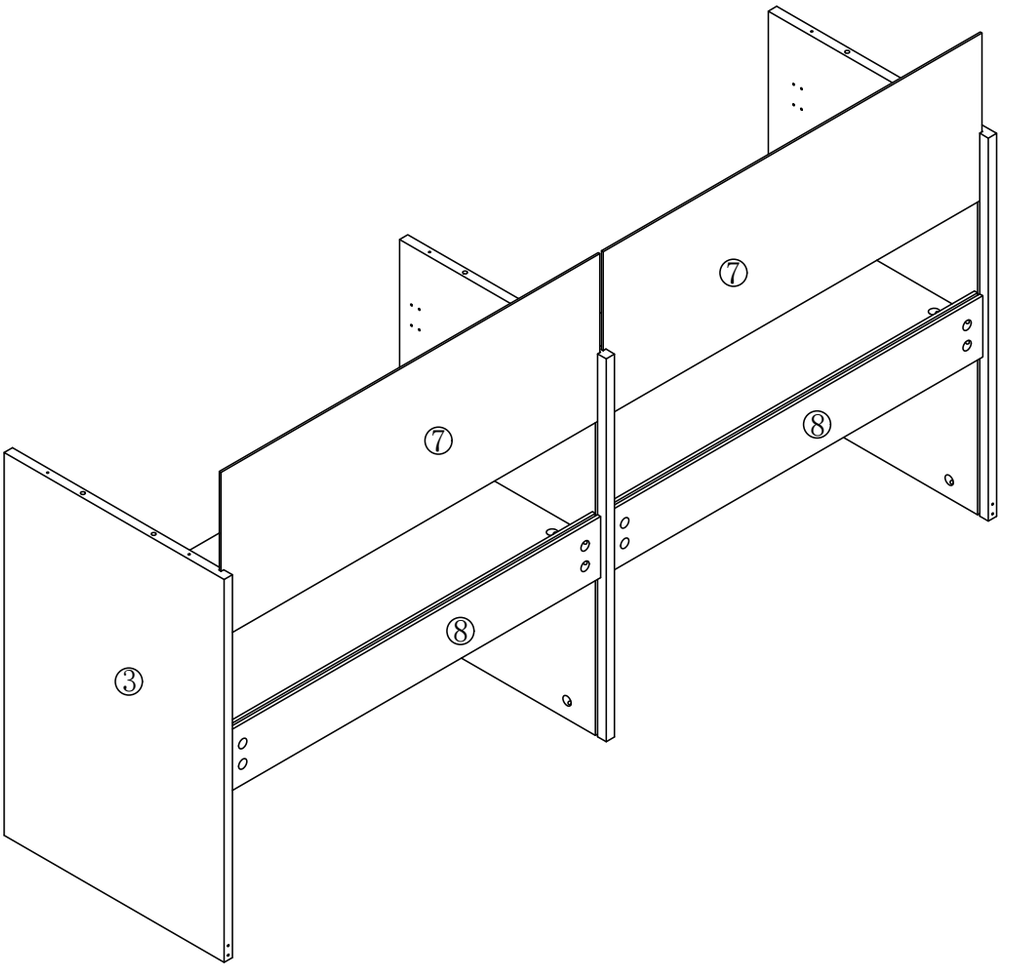

7

C	×6
φ6x30	

D	×6
M4x40MM	

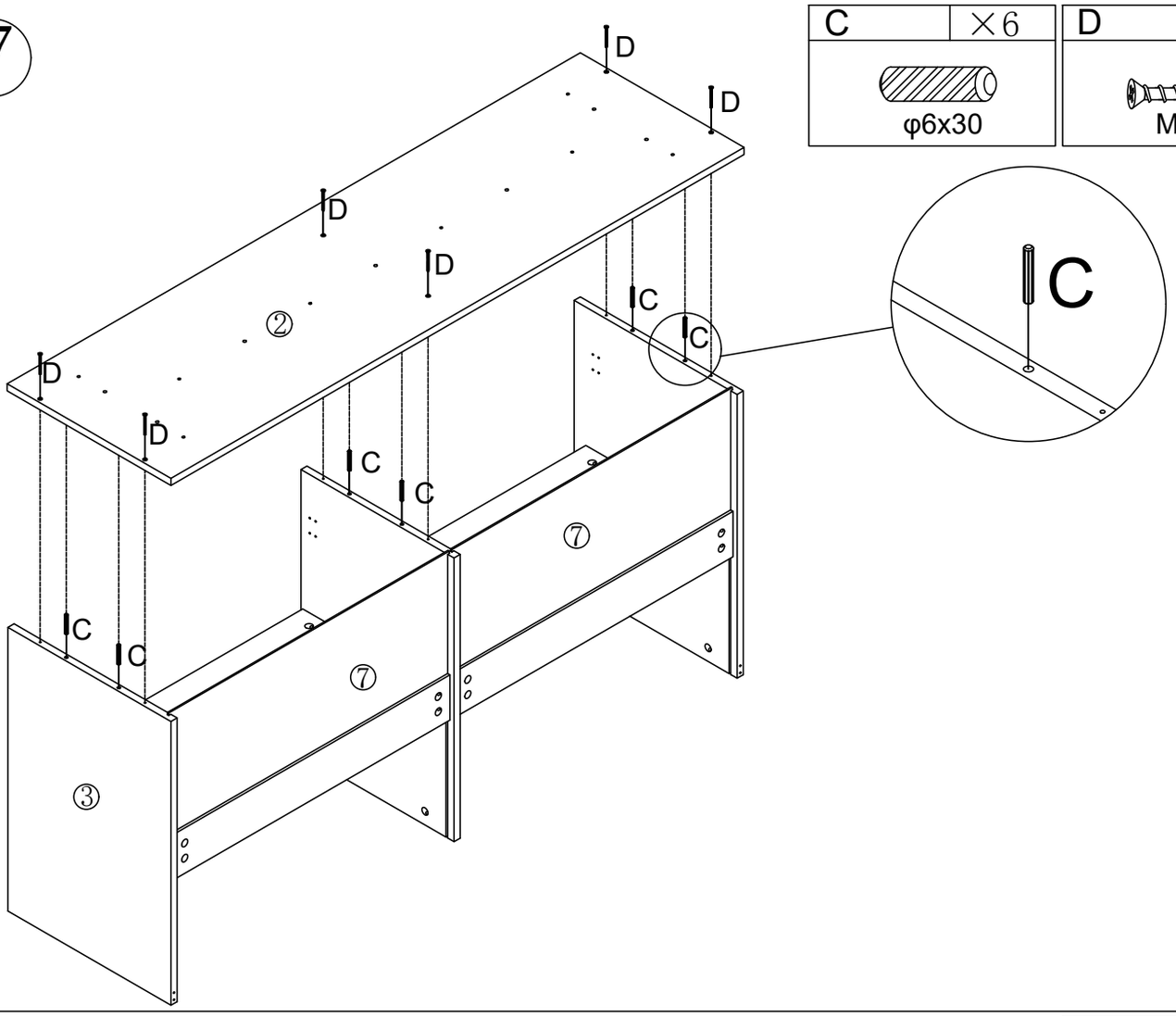

8

A	×8
M6x35MM	

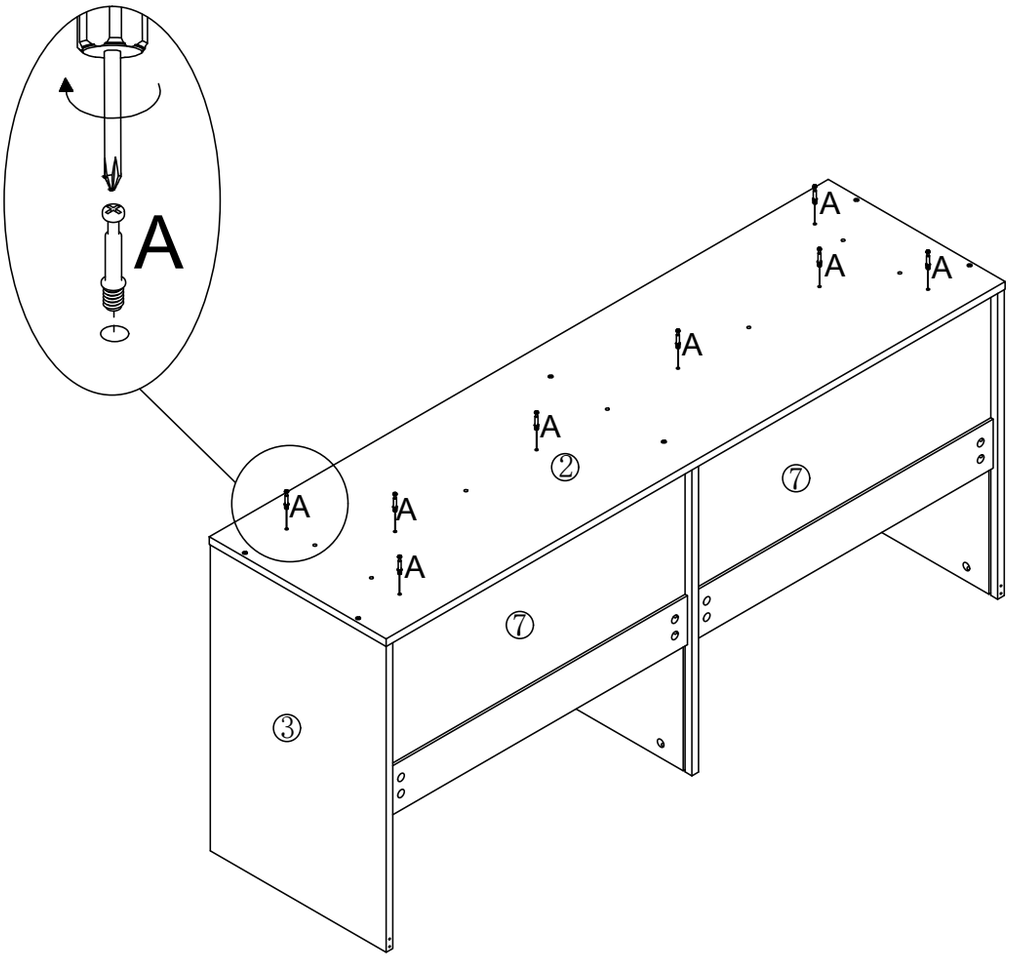

9

N	×1



O	×4

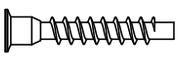

M7x50MM

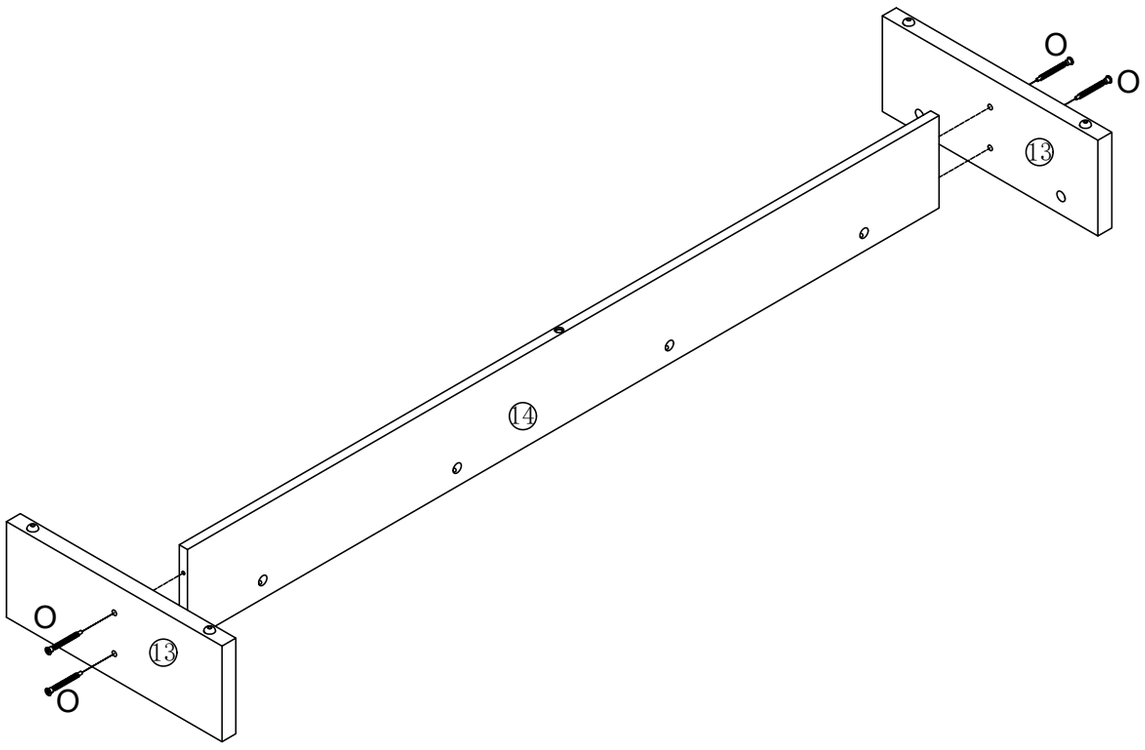

10

B	×8



φ15x10

C	×7



φ6x30

P	×1

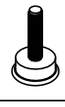

11

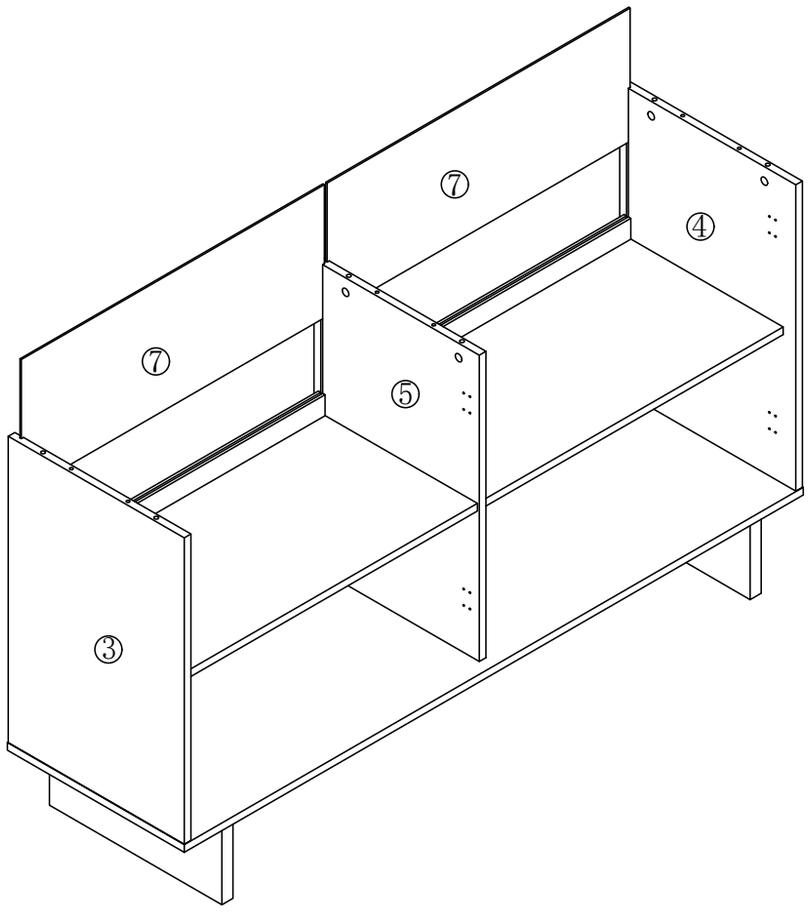

12

B	×6
φ15x10	

C	×6
φ6x30	

I	×6

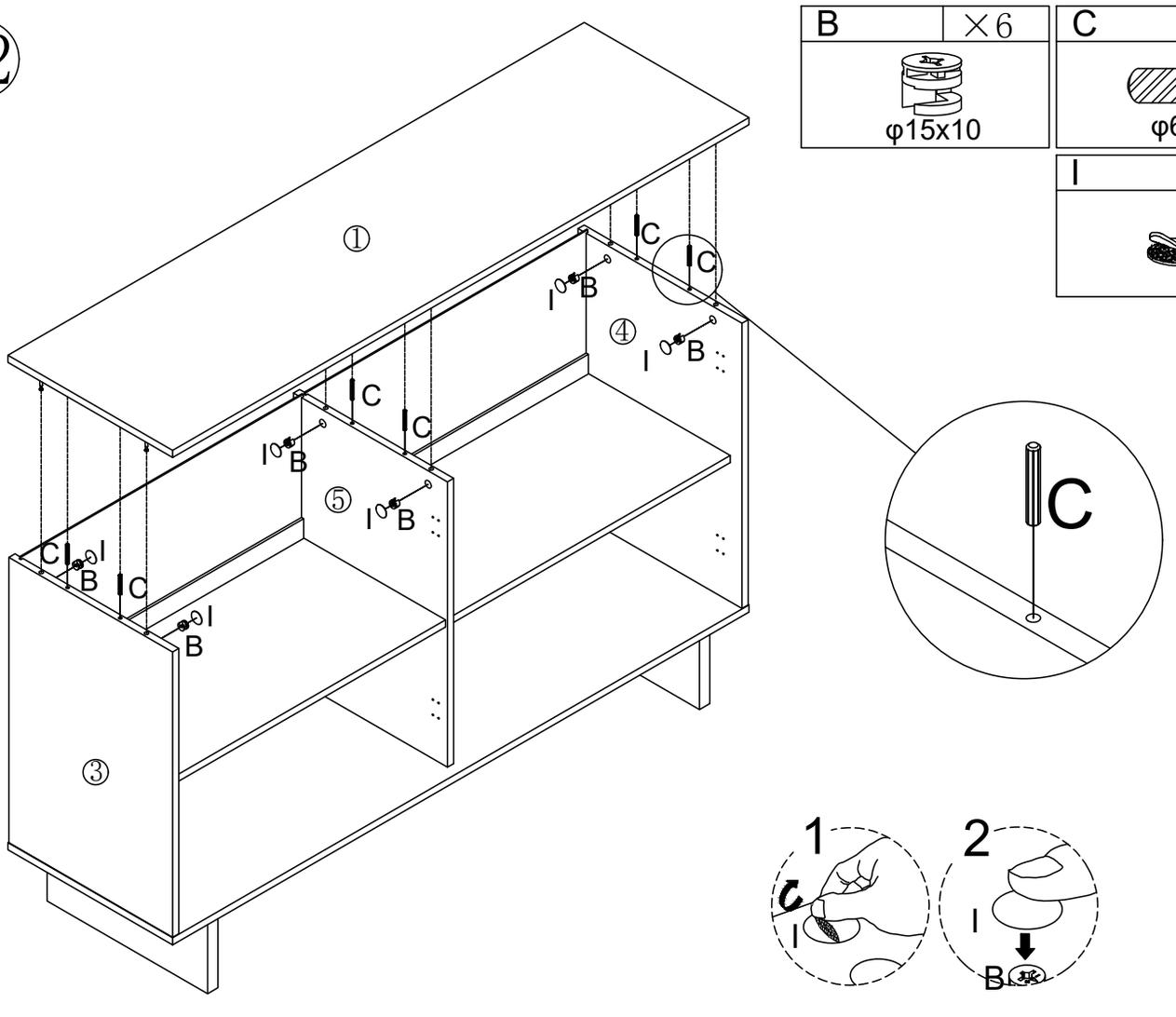

13

F	×16

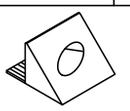

L	×2



E	×22



M3.5x14MM

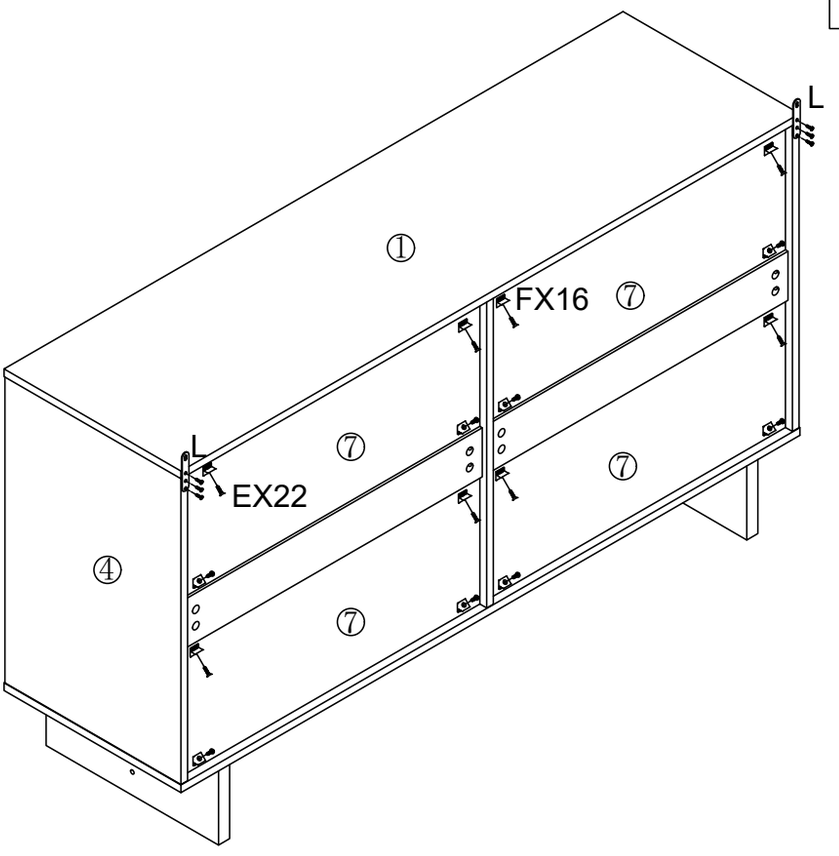

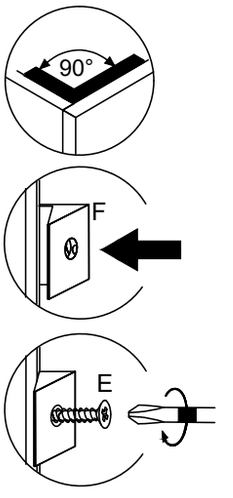

14

E	×16



M3.5x14MM

H	×4

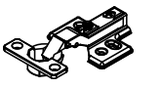

R	×4



M3x14MM

K	×4

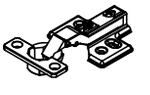

S	×4

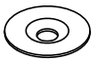

⑮

E	×16
M3.5x14MM	

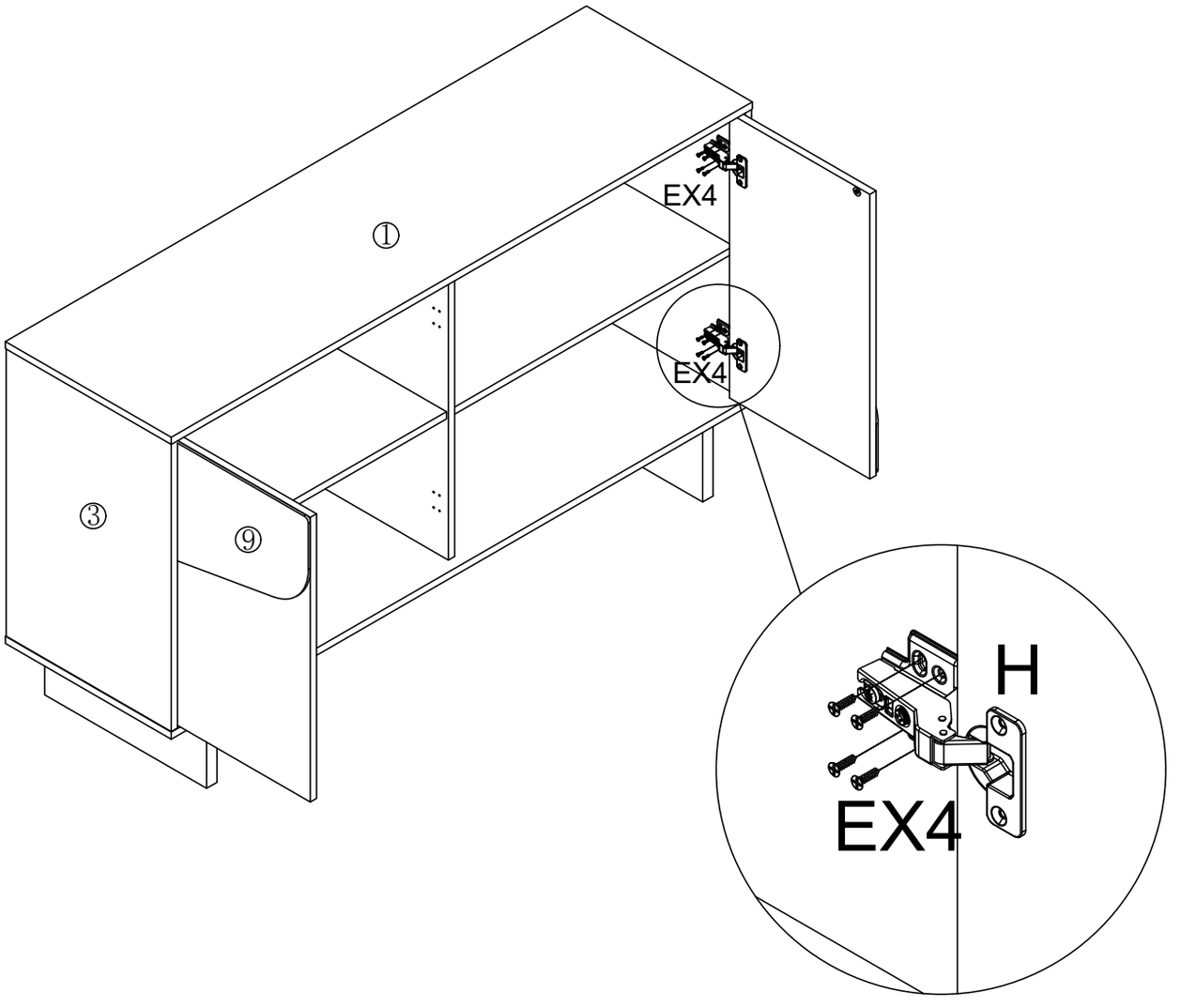

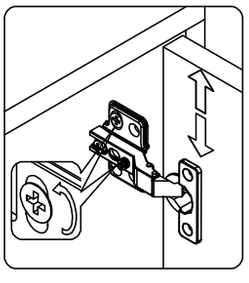

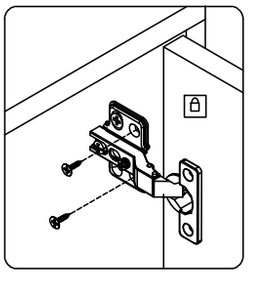

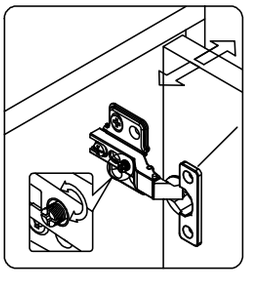

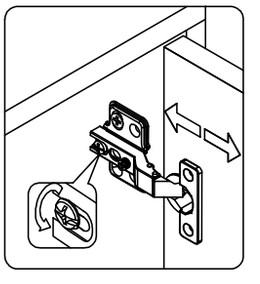

16

E	×16
M3.5x14MM	

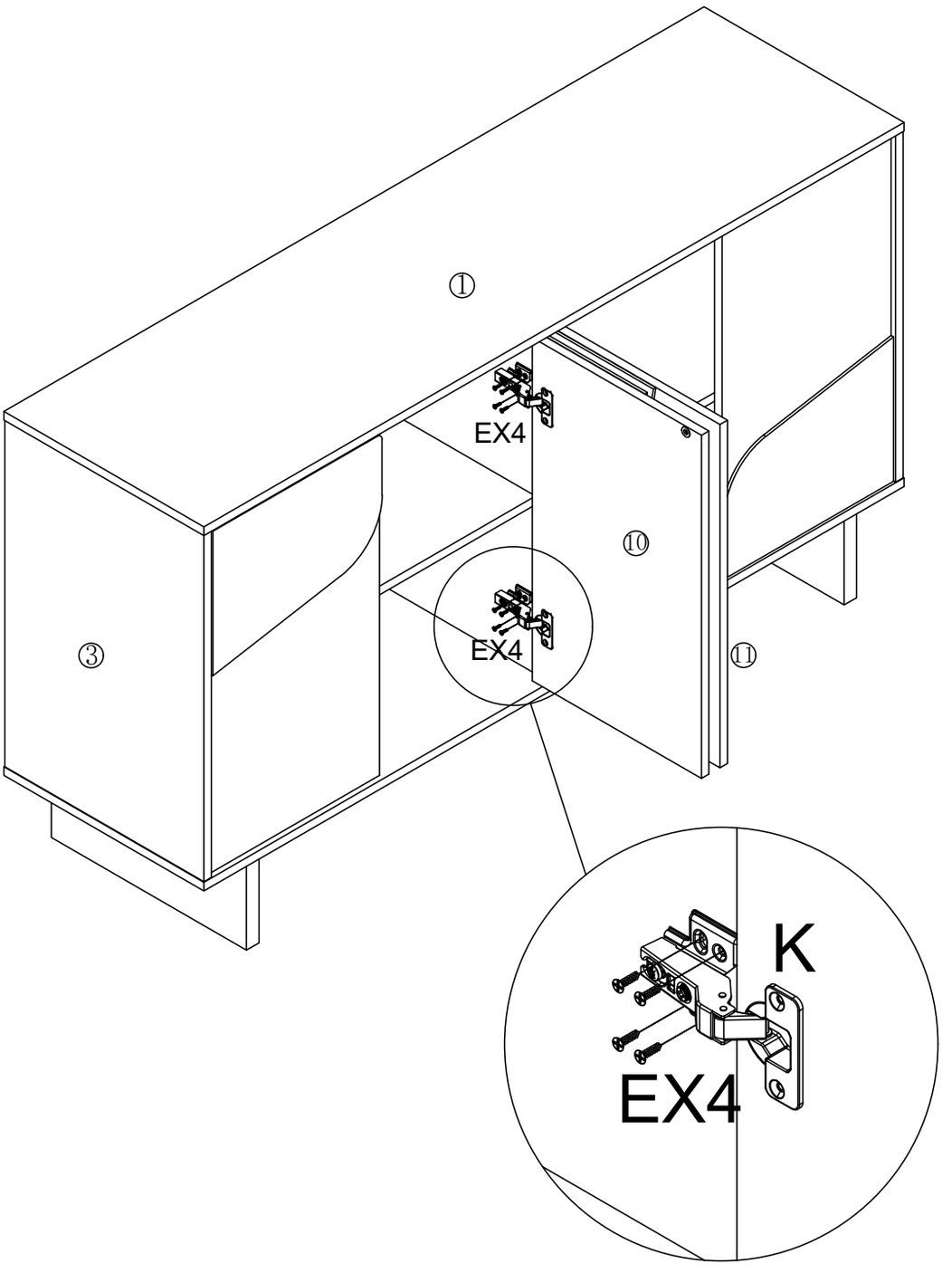

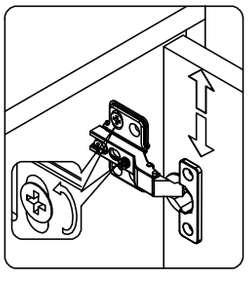

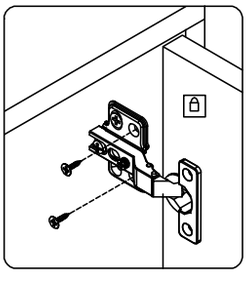

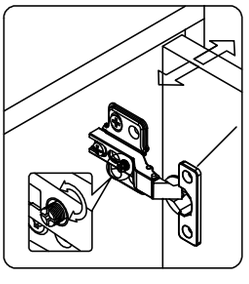

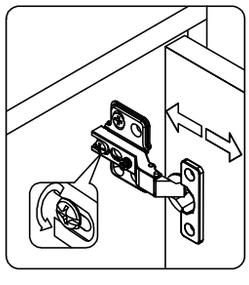

17

D	×2
M4x40MM	

J	×2

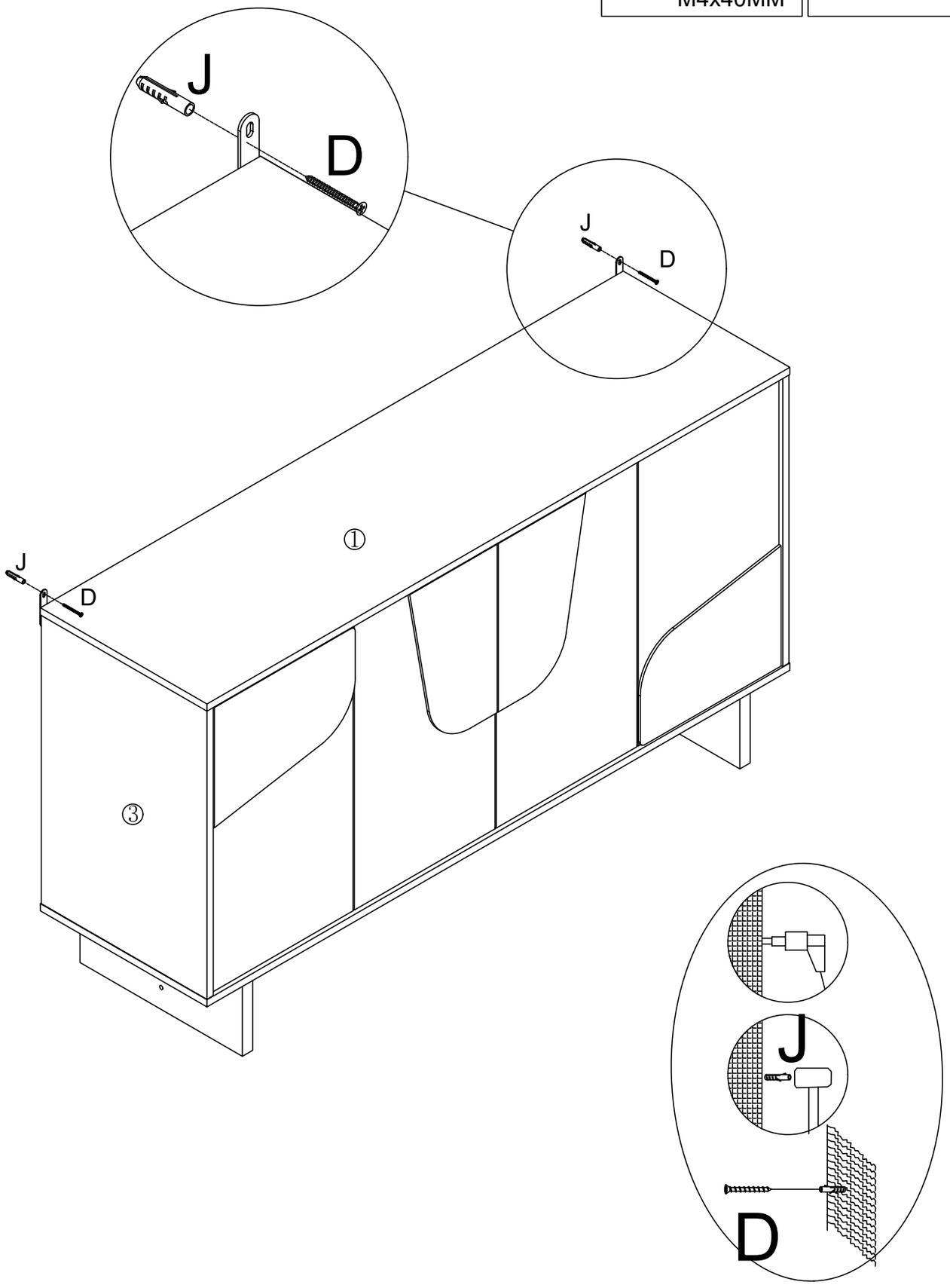

18

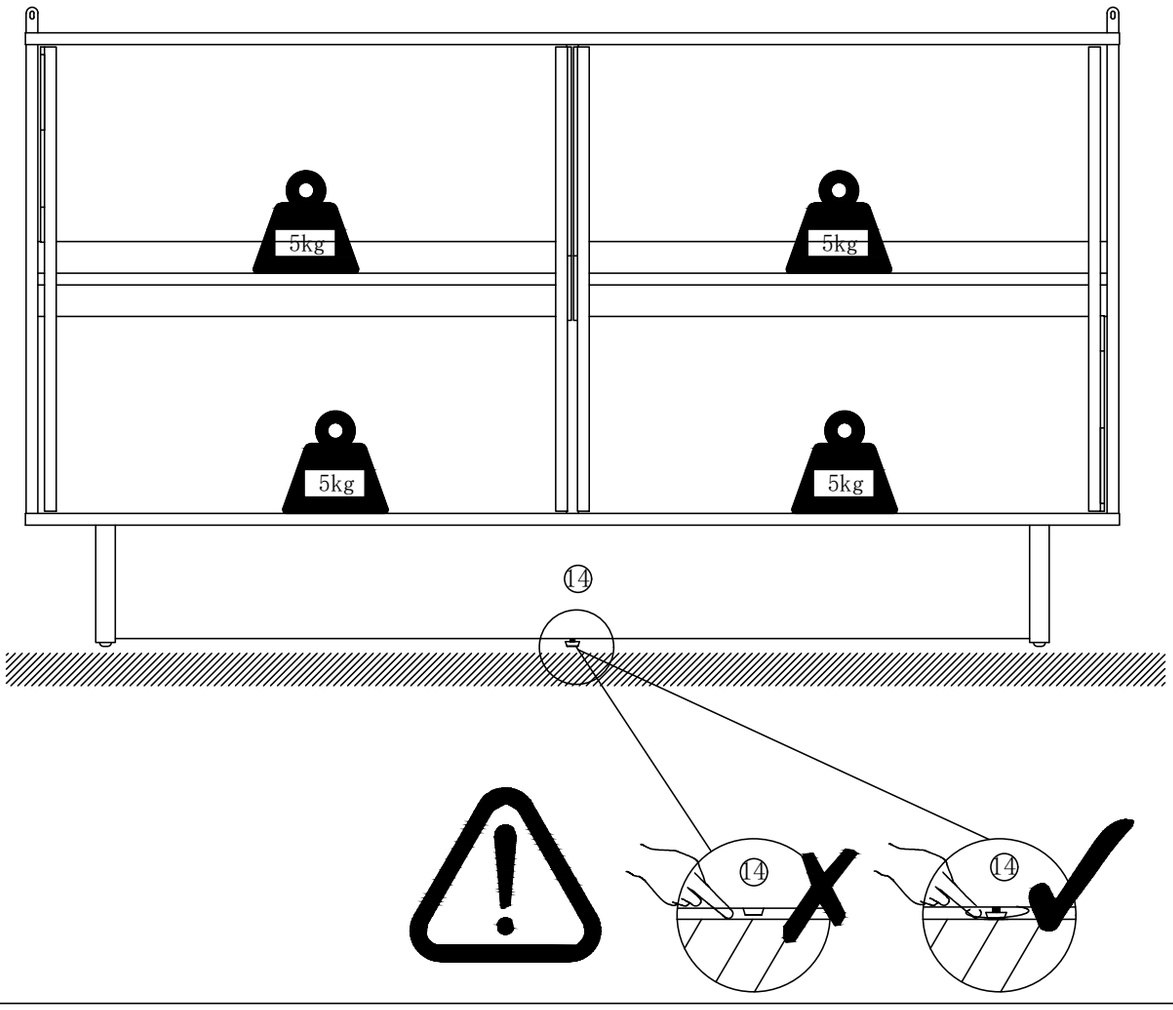

19

