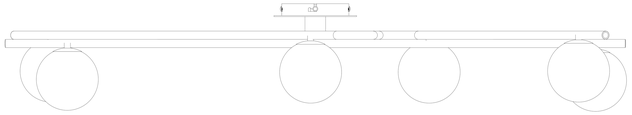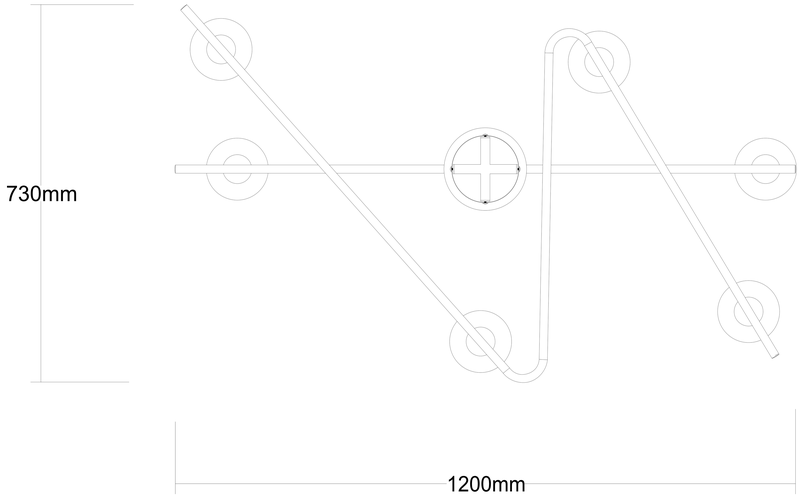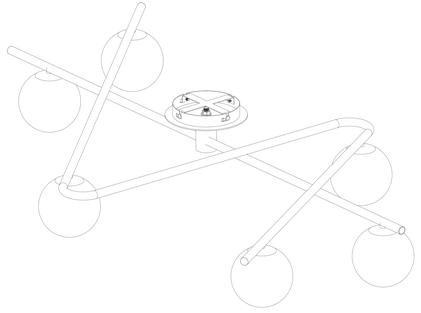C17944-6L0 / 82272109-02