28090056/01

BDSK Handels GmbH & Co.KG
Mergentheimer Straße 59
D-97084 Würzburg

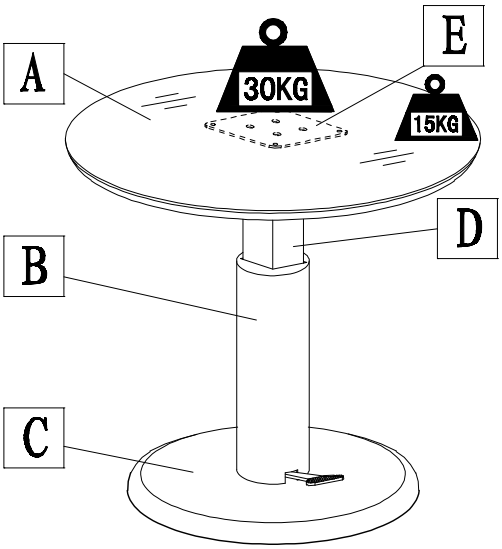

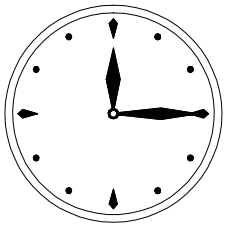

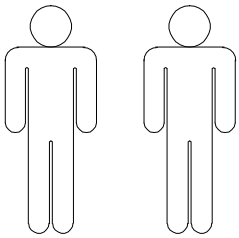

A	×1
B	×1
C	×1
D	×1
E	×1

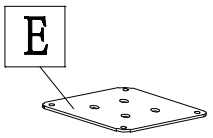

150×150×5

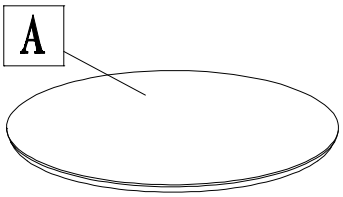

⌀800×23

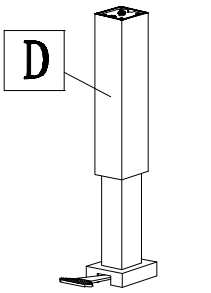

80×80×580

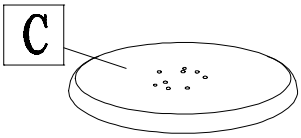

⌀500×25

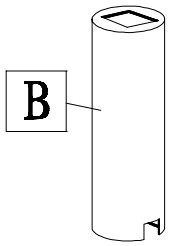

⌀140×400

①	②	③	④	⑤	⑥	⑦	⑧
M8×35mm	M16×M8	M8	M13	M8×30mm	M8×16mm	M8×20mm	M5
×7	×11	×7	×1	×2	×4	×4	×1

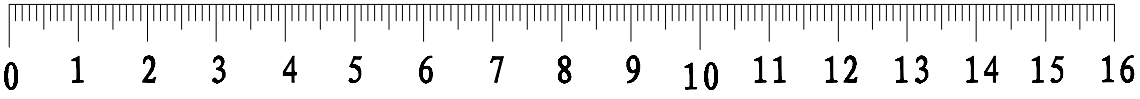

28090056/01

1

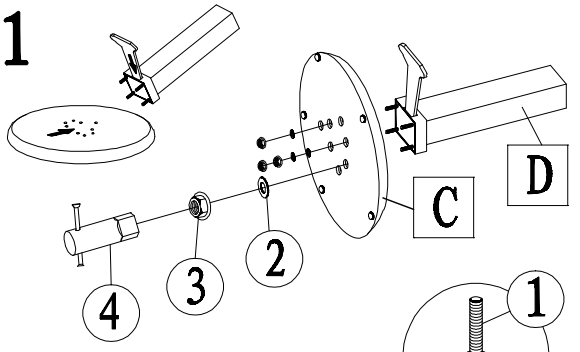

①	②	③	④
M8×35mm	M16×M8	M8	M13
×4	×4	×4	×1

2

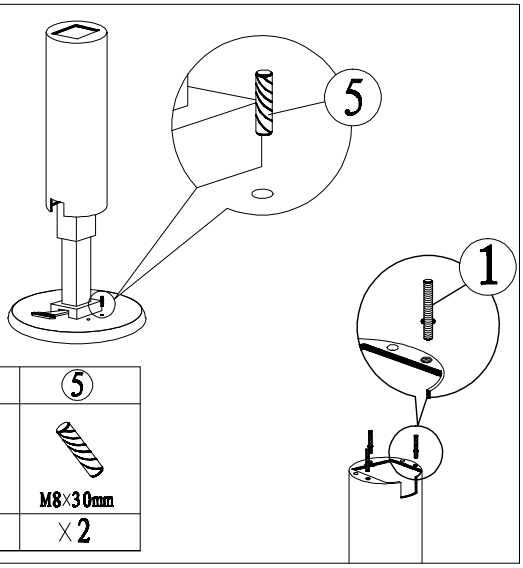

①	⑤
M8×35mm	M8×30mm
×3	×2

3

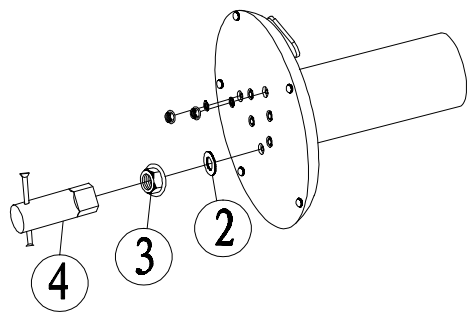

②	③	④
M16×M8	M8	M13
×3	×3	×1

4

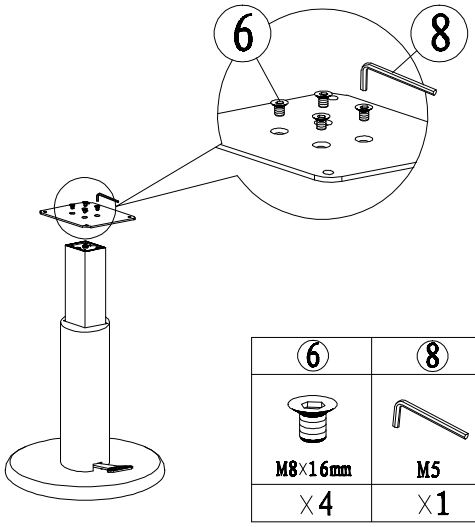

⑥	⑧
M8×16mm	M5
×4	×1

5

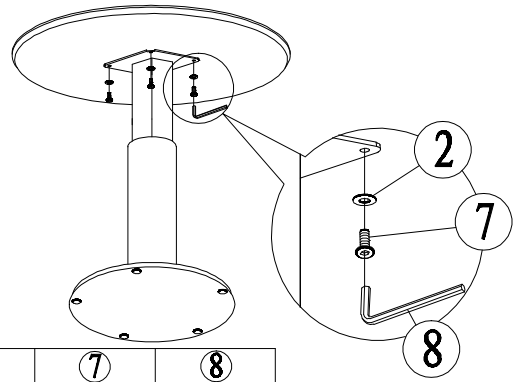

②	⑦	⑧
M16×M8	M8×20mm	M5
×4	×4	×1

6

