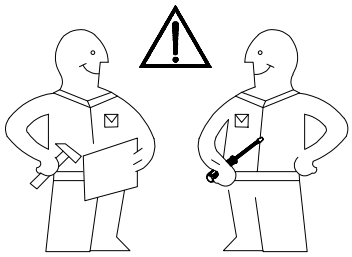

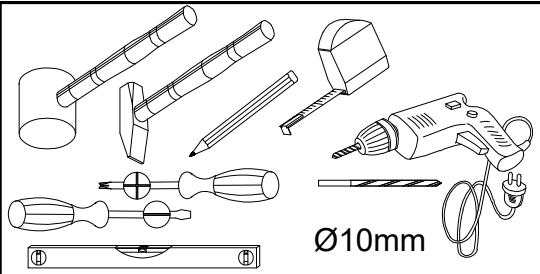


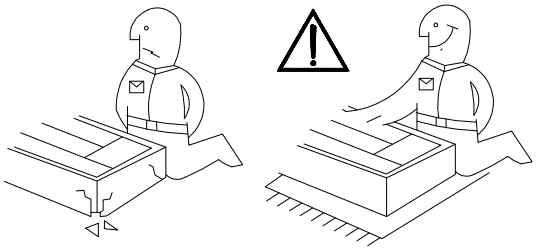

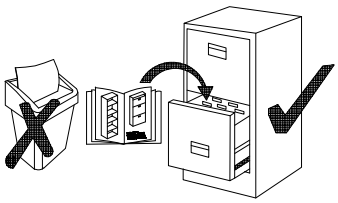

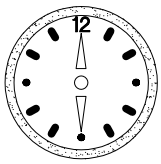


1h

# 84-200-...
# ADANA
# Zeile 200
Hängeschrank 1T

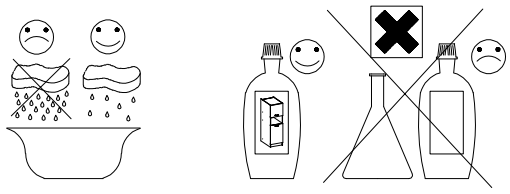

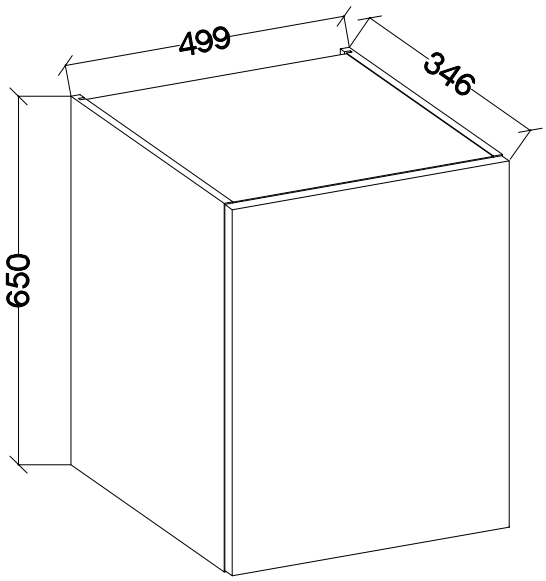


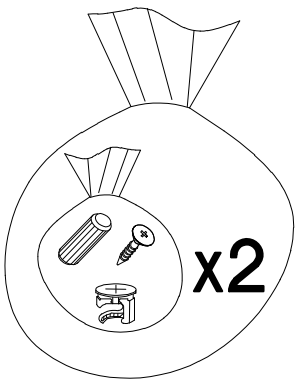


| | | | | | |
|---|---|---|---|---|---|
| ⌀8x30mm A | 6,4 x 50mm B | E1 | ⌀35/0mm HG | ⌀5/16mm J3 | |
| 8 | 8 | 8 | 2 | 4 | |
| K | K16 | O | ⌀3.5x13mm P5 | ⌀3.0x20mm P7 | ⌀4.0x30mm P8 |
| 2 | 2 | 1 | 4 | 8-10 | 4 |

ISM-KUH-01723

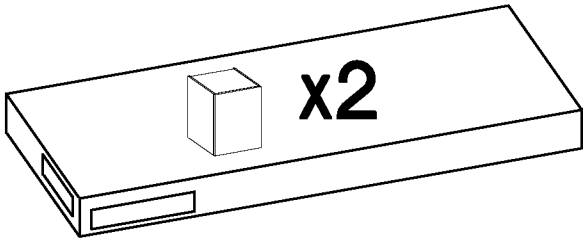


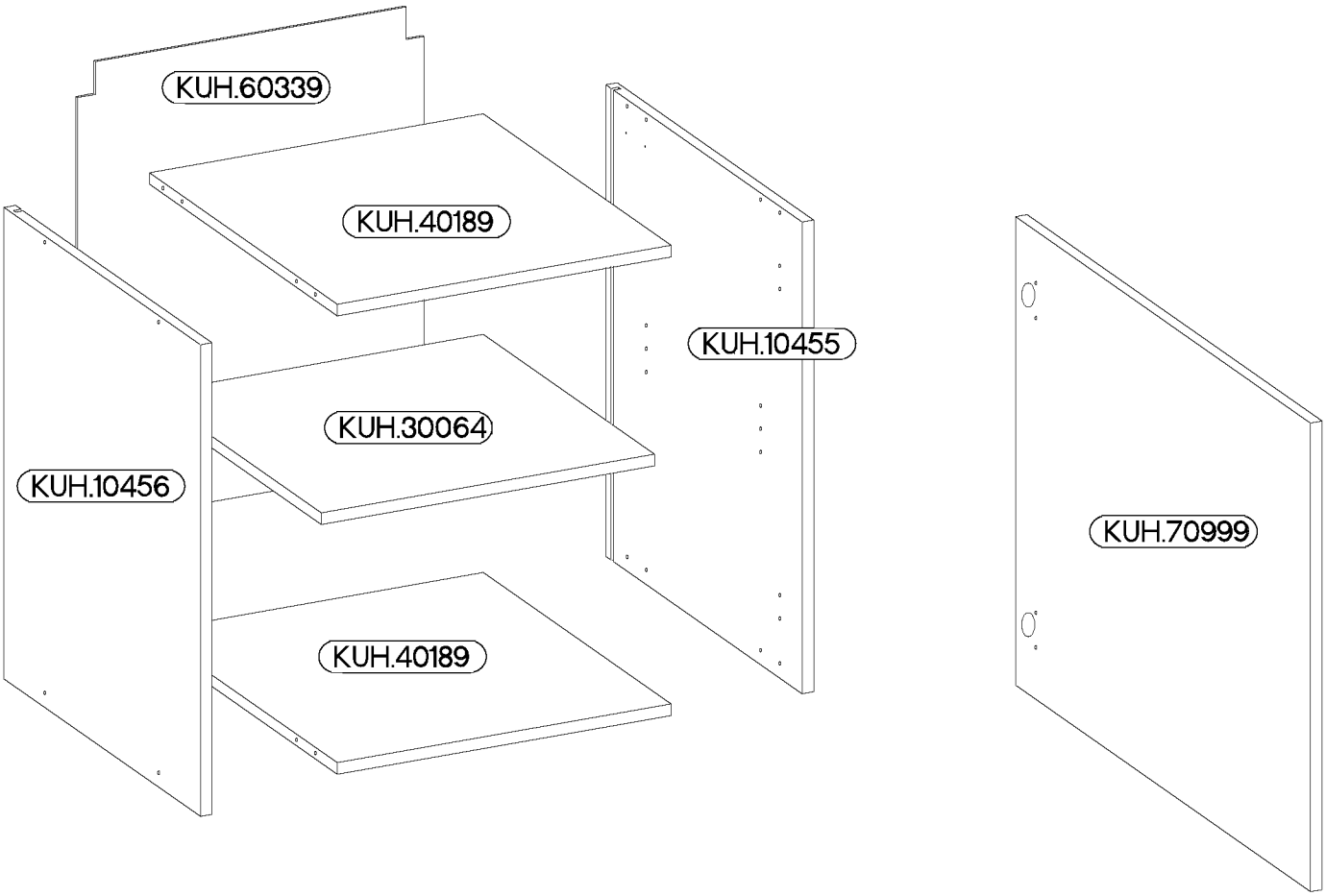


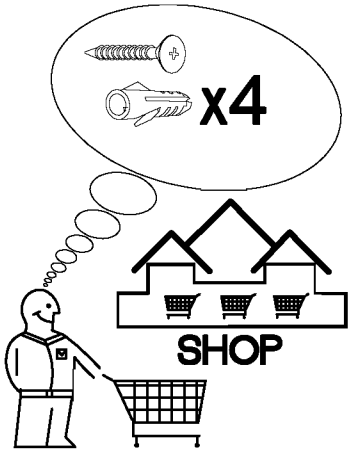


| Colli | Spare Part | Dimension |
|---|---|---|
| Colli 4/6 | KUH.10455 | 650x330x16 |
| | KUH.10456 | 650x330x16 |
| | KUH.30064 | 466x288x16 |
| | KUH.40189 x2 | 467x316x16 |
| | KUH.60339 | 635x485x2,5 |
| | KUH.70999 | 646x496x16 |

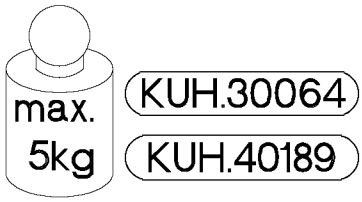

# 1

| ⌀8x30mm | ⌀4.0x30mm | |
|---|---|---|
| A | P8 | K |
| 8 | 4 | 2 |

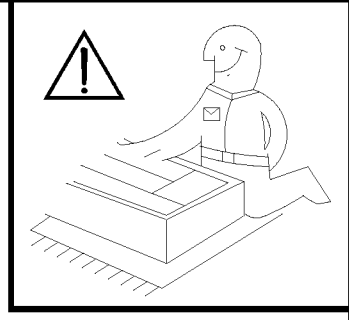

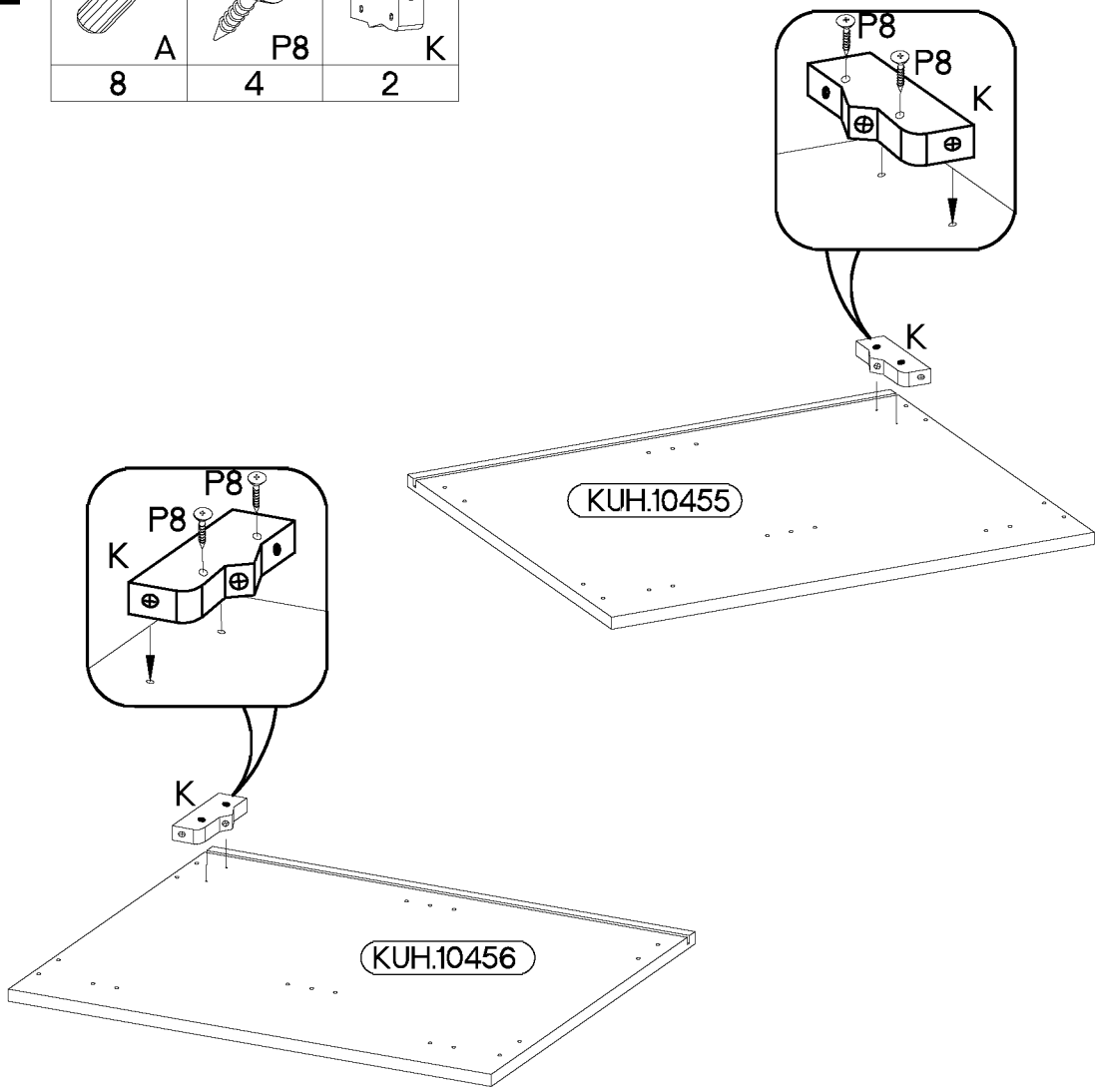


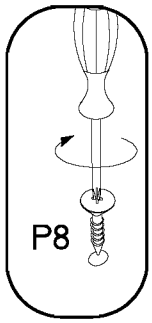


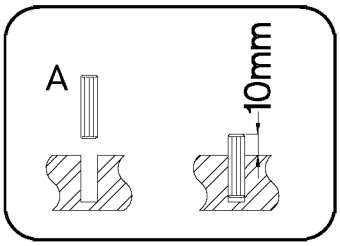


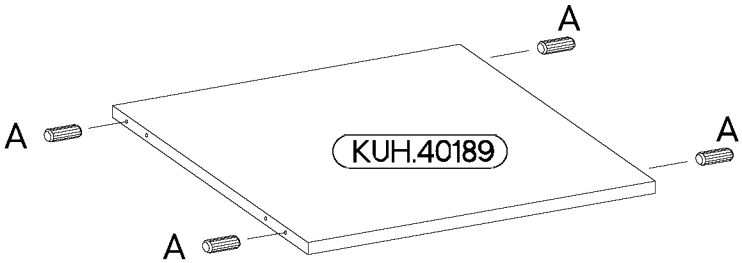


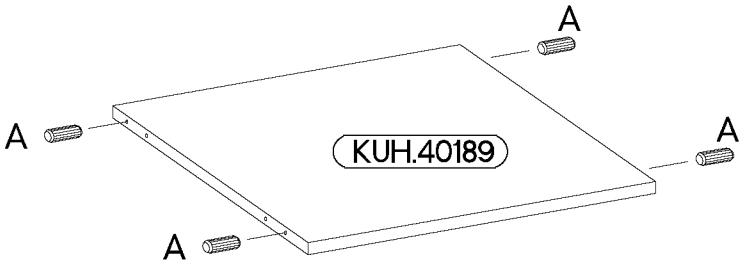

# 2

| 6,4 x 50mm B | O | E1 |
|---|---|---|
| 4 | 1 | 4 |

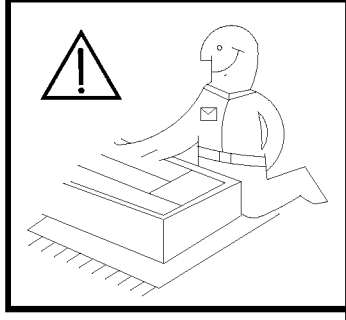

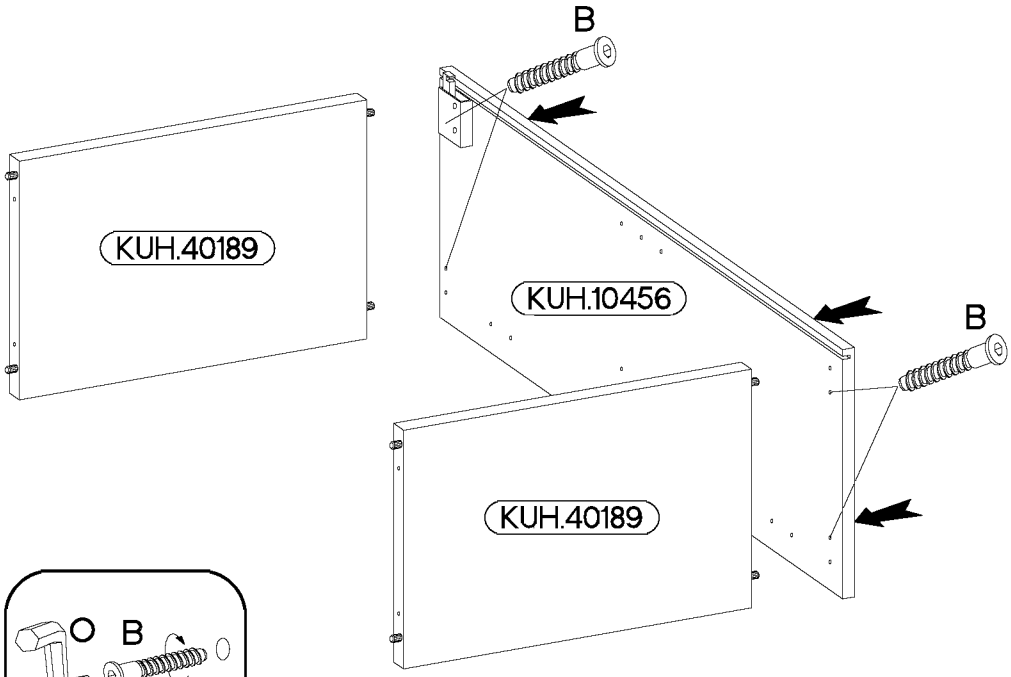


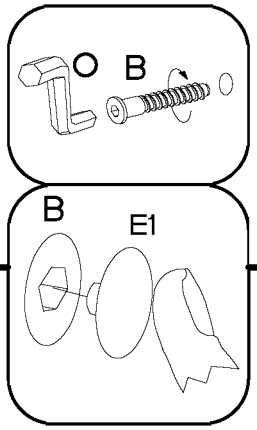


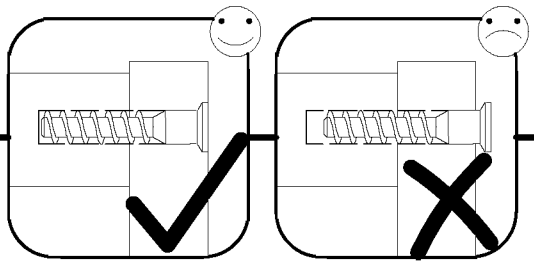

# 3

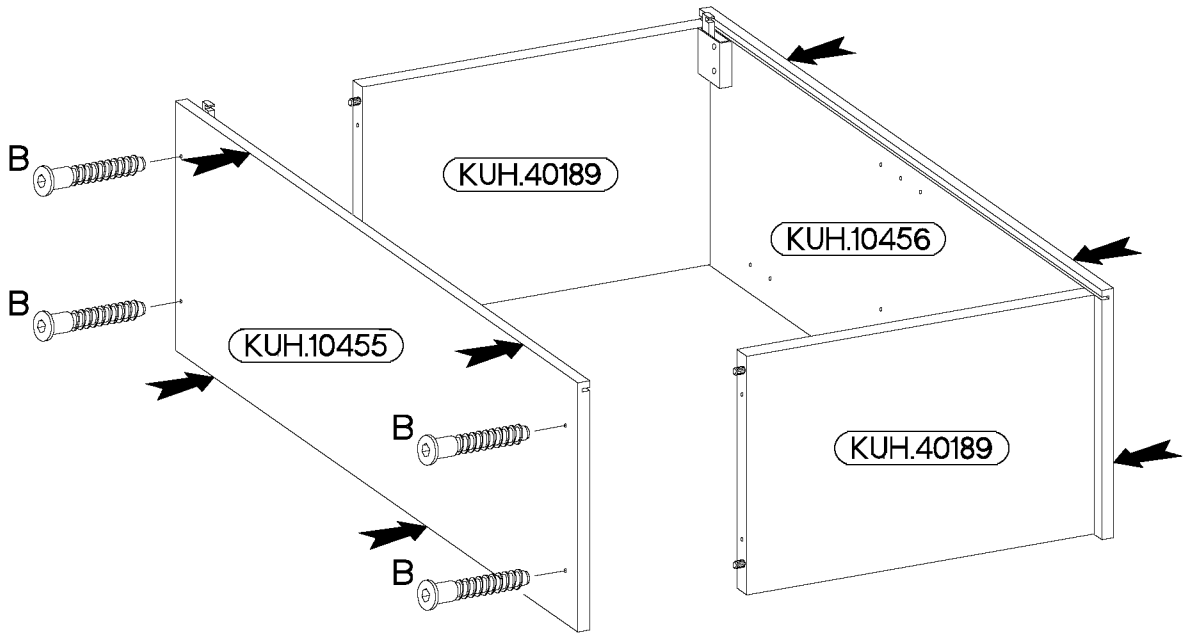


| 6,4 x 50mm B | O | E1 |
|---|---|---|
| 4 | 1 | 4 |

# 4

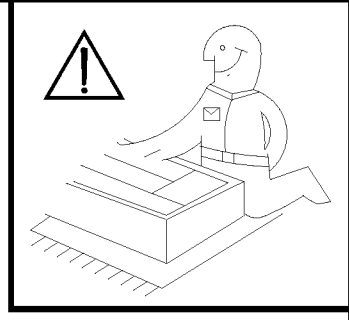

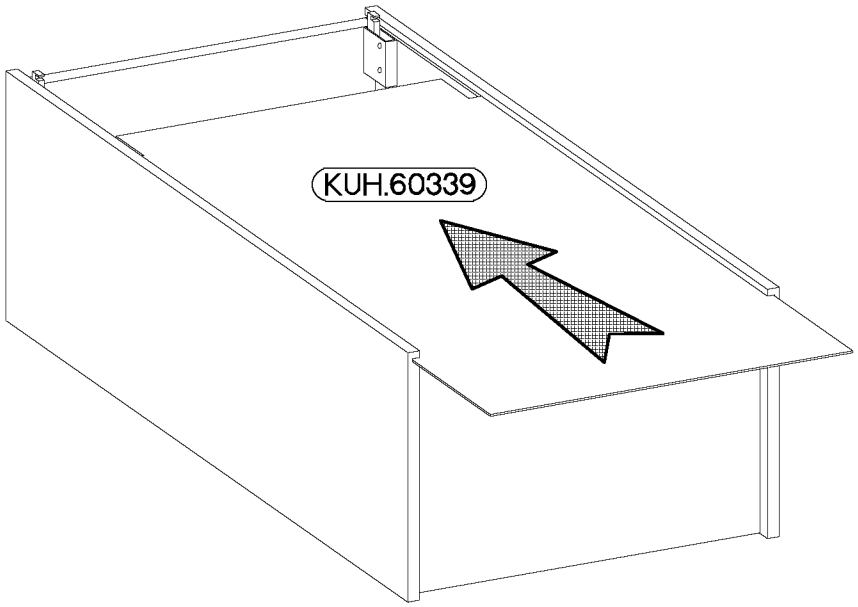


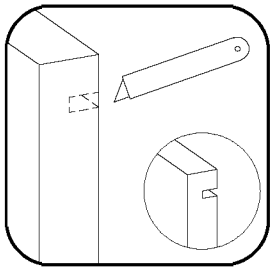

# 5

| ⌀3.0x20mm P7 |
| --- |
| 8-10 |

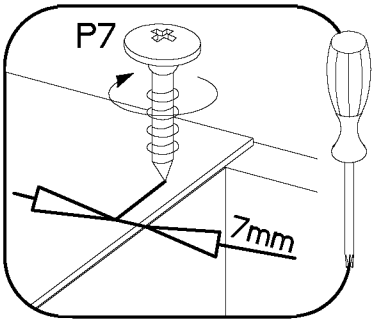


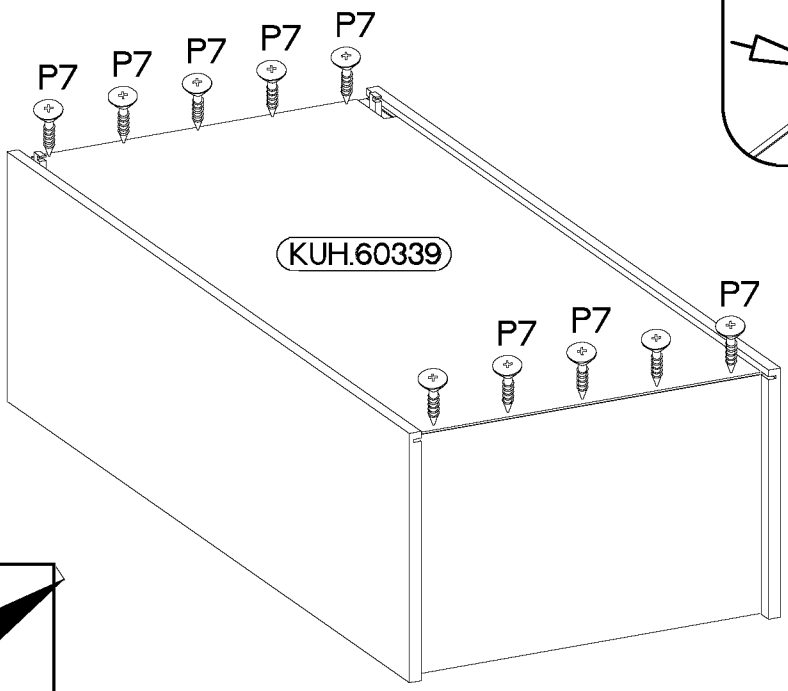


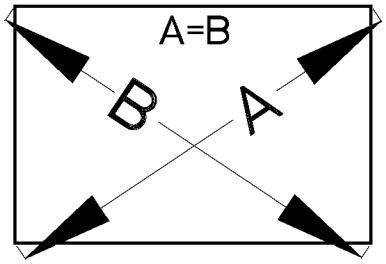

# 6

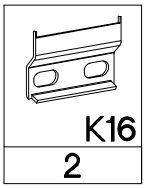


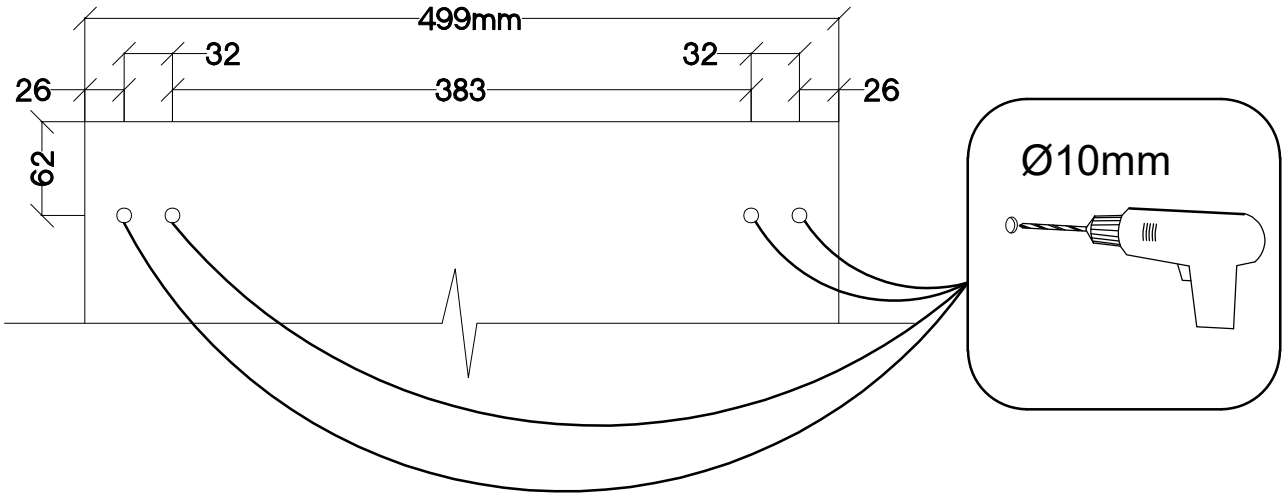


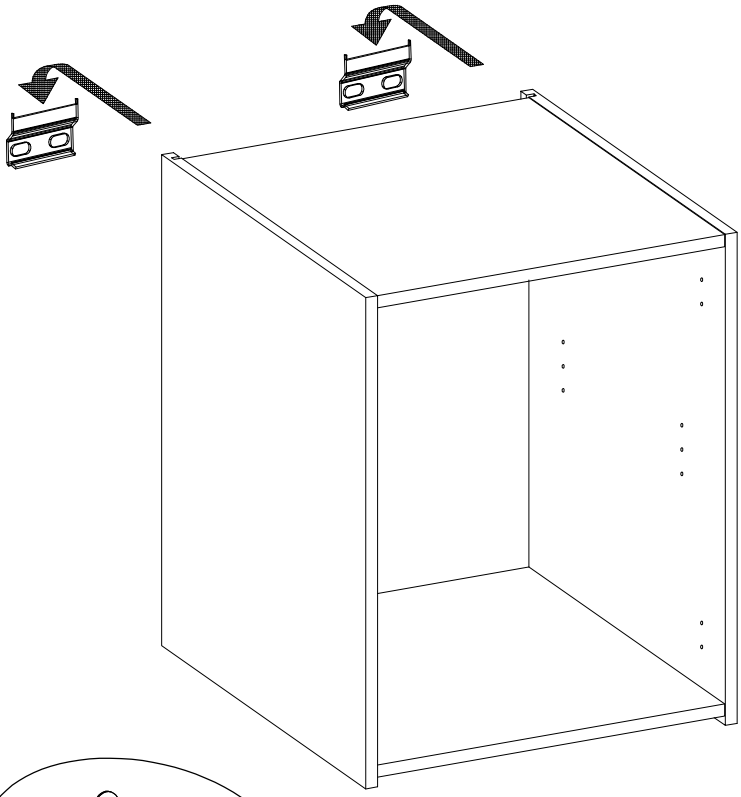

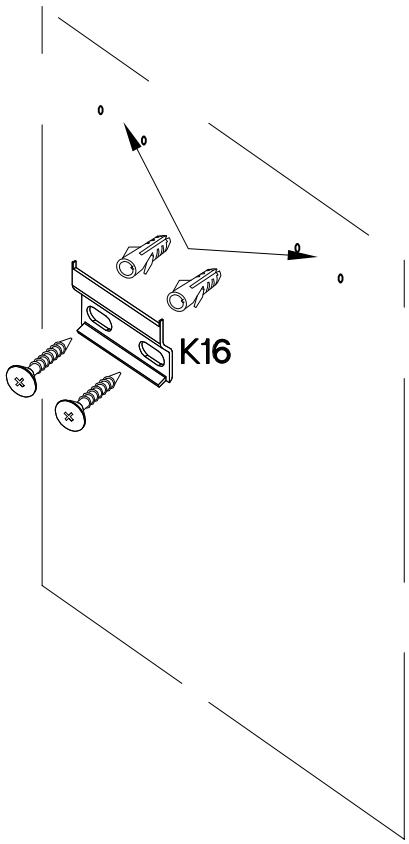


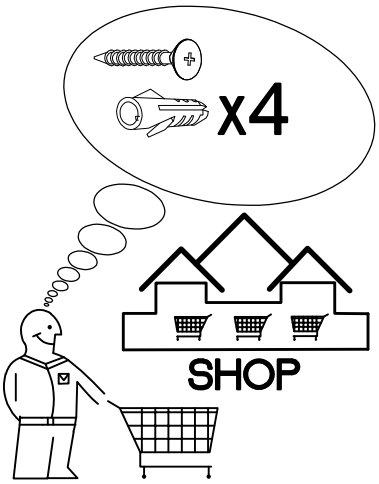


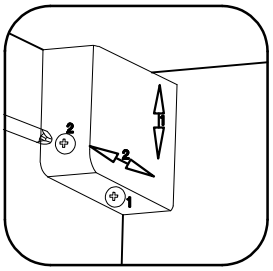


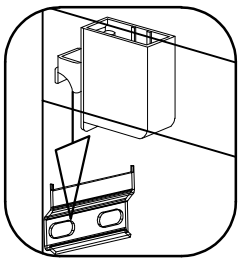

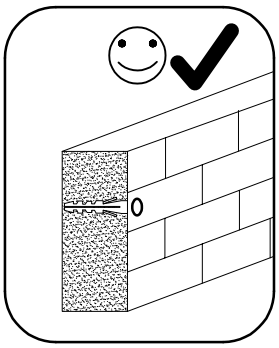

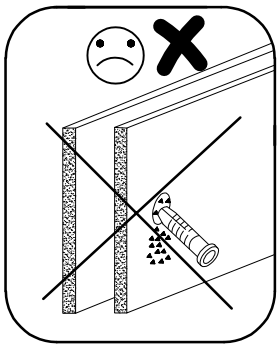

# 7

| ⌀5/16mm |
|---|
| J3 |
| 4 |

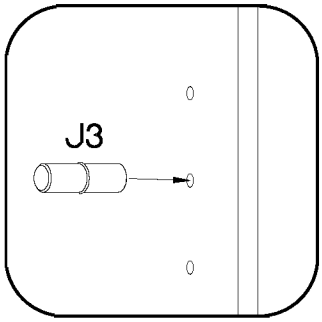


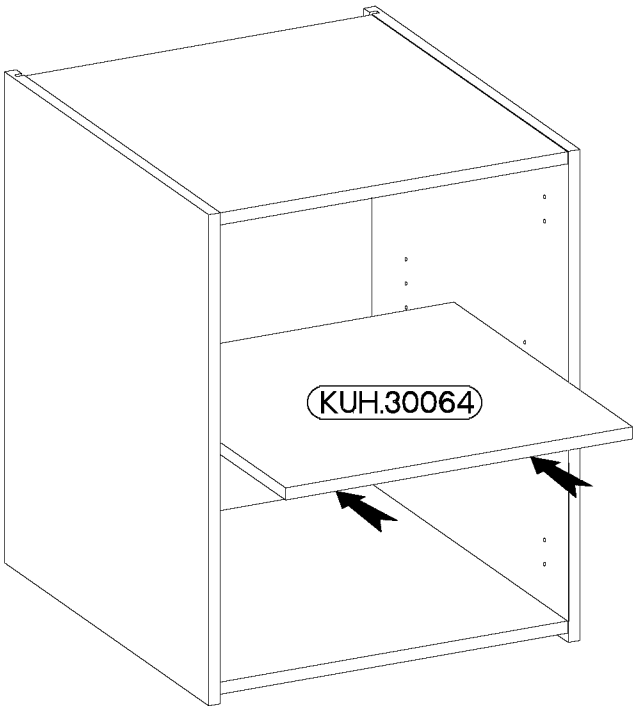


# 8

| ⌀35/0mm | ⌀3.5x13mm |
|---|---|
| HG | P5 |
| 2 | 4 |

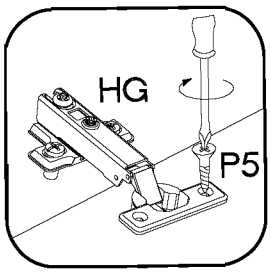


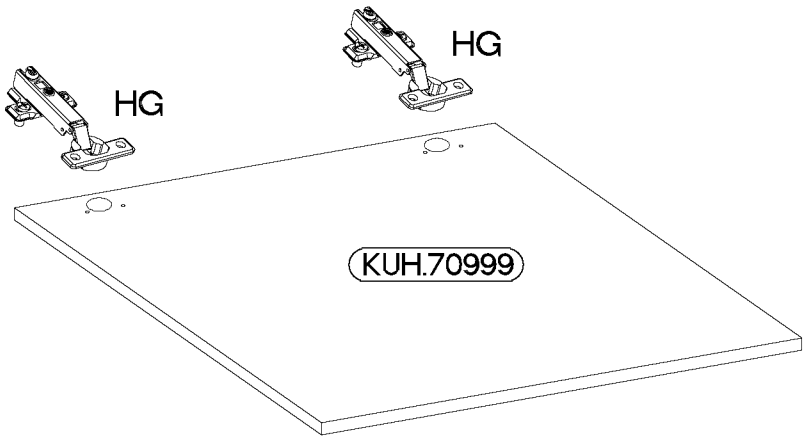
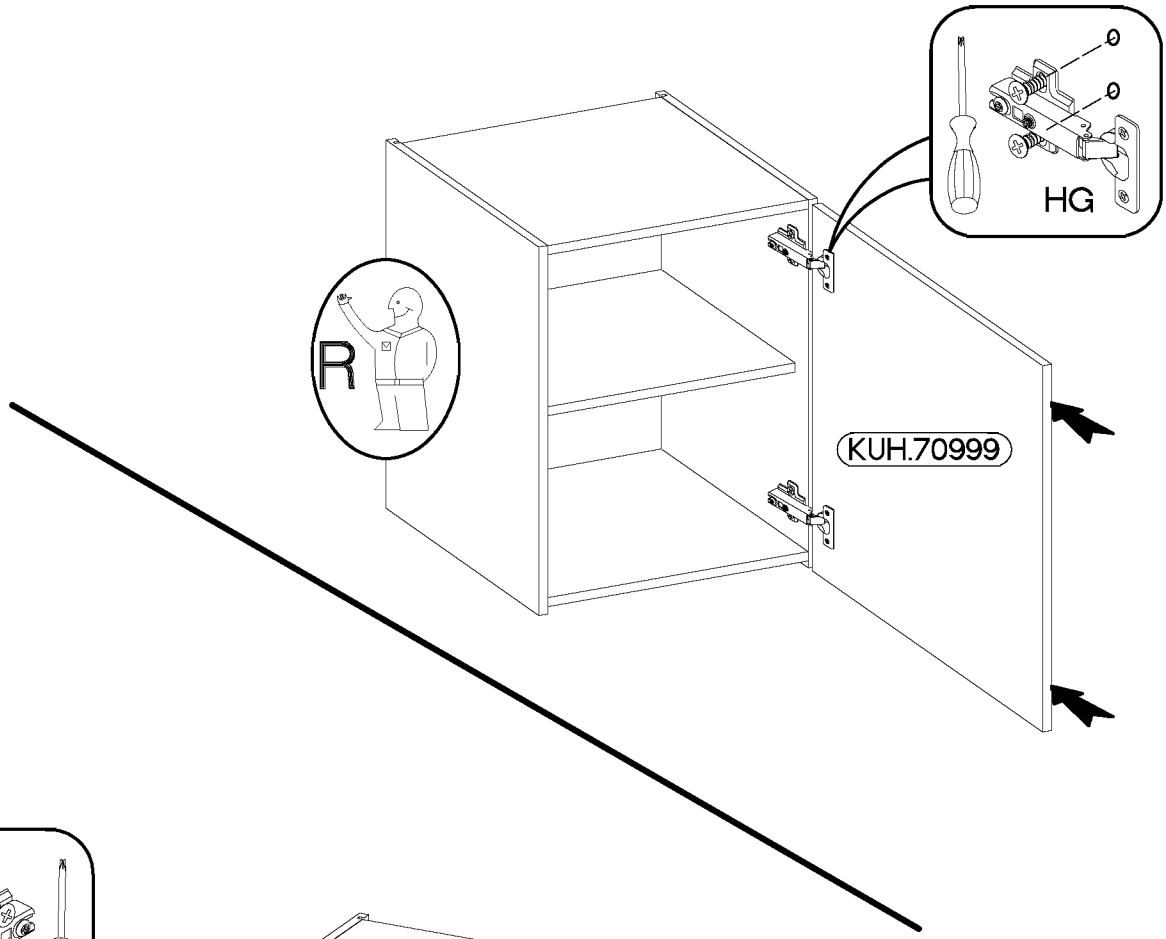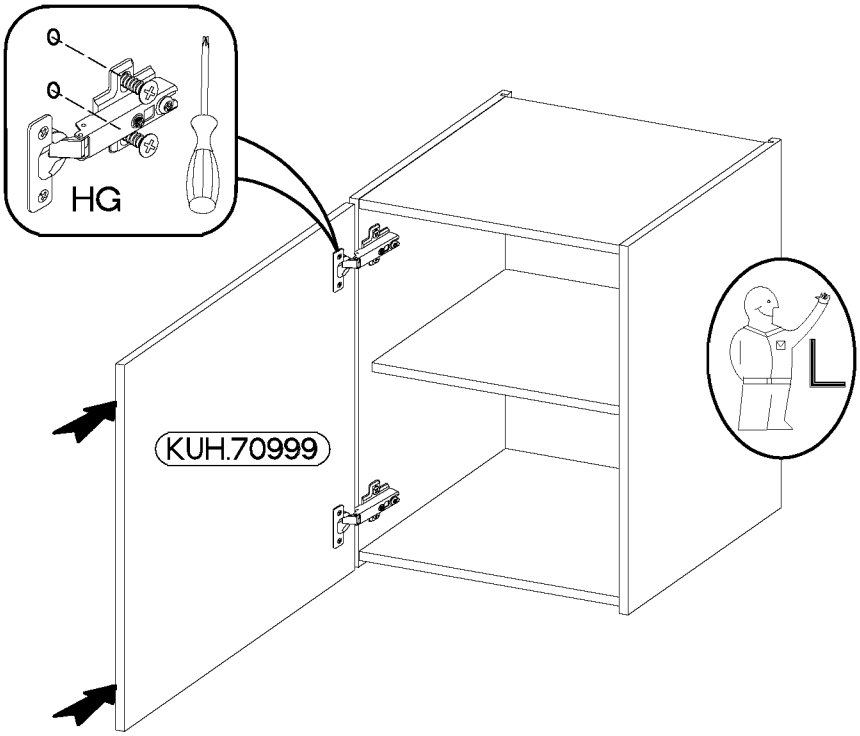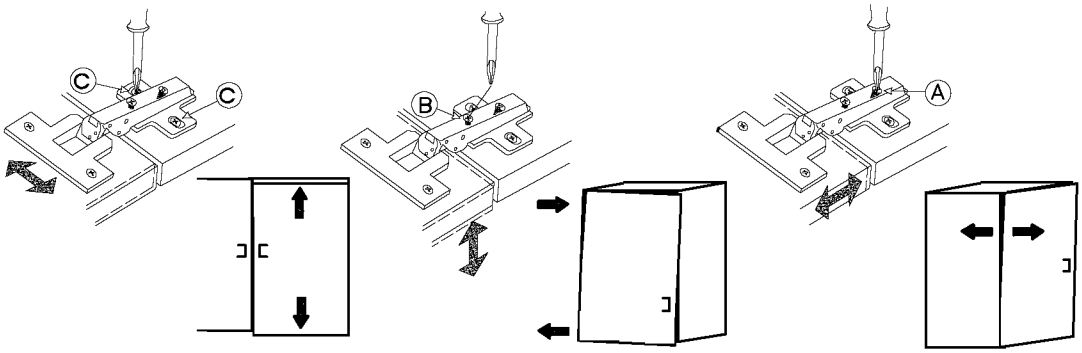
# 9