004S0001/07 004S0001/08 004S0001/09
BDSK Ha ndels GmbH & Co.
KG Mergentheimer Straβe 59
DE-97084 Würzburg
Germany

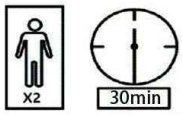

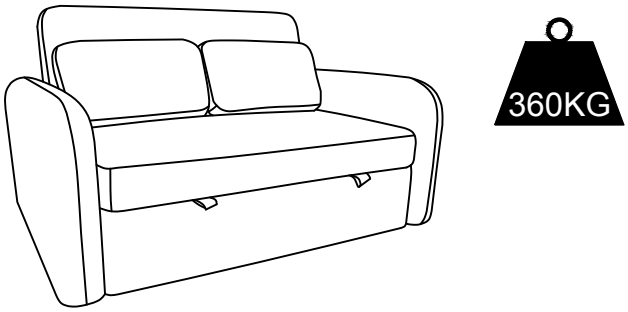

A x1	B x1	C x1	D x2
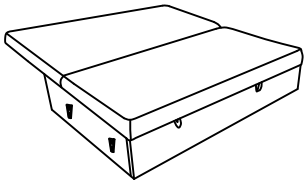	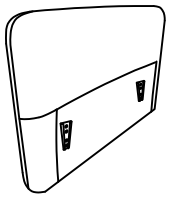	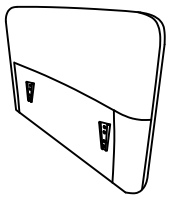	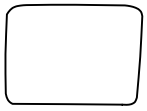

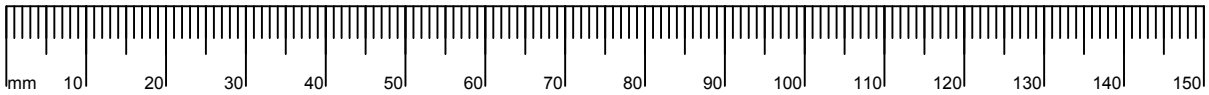

1

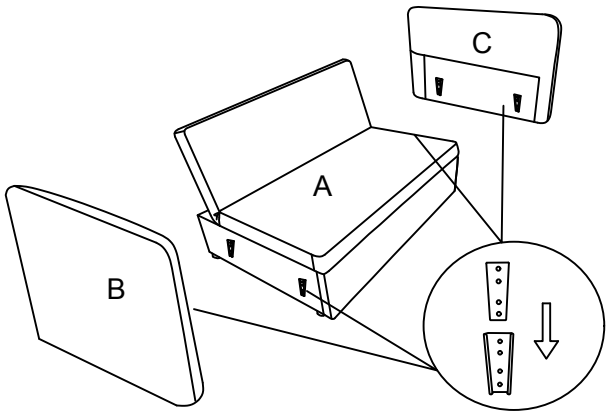

2

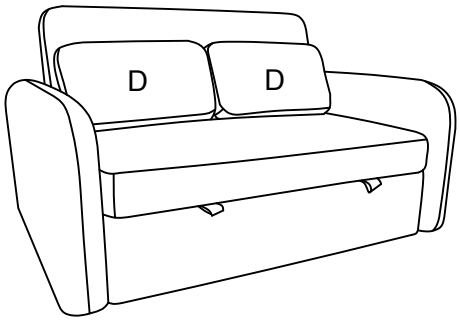

3

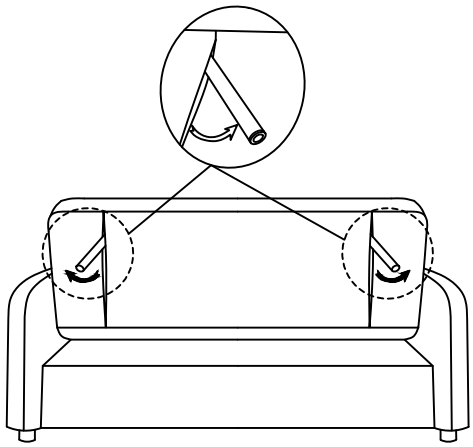

4

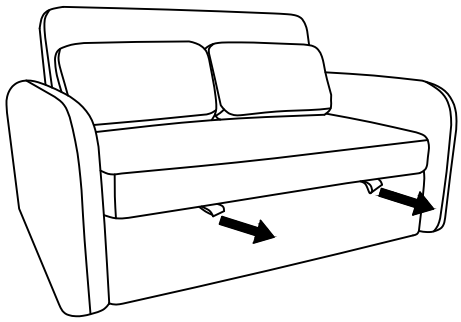

5

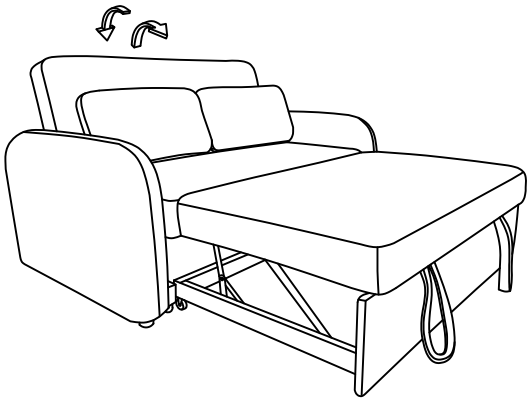

6

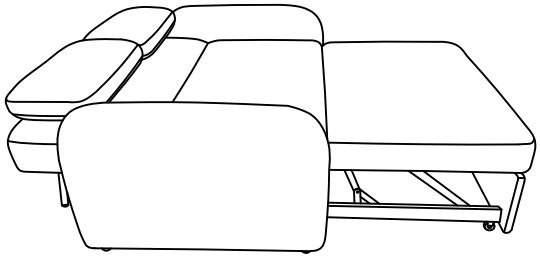



Do not stand
on the furniture



Do not tilt