17390054/01

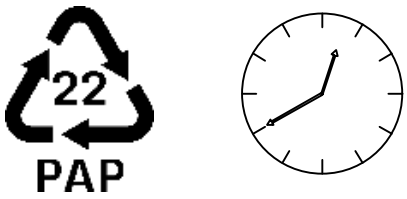

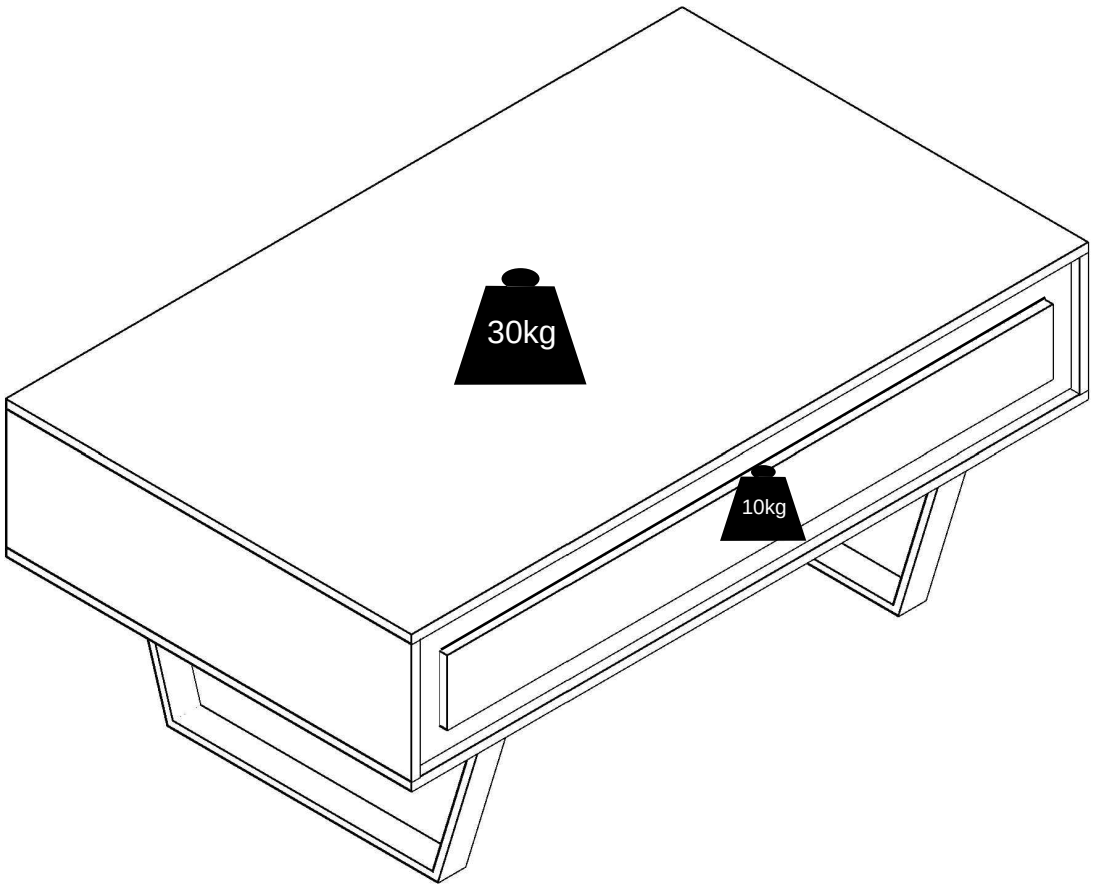

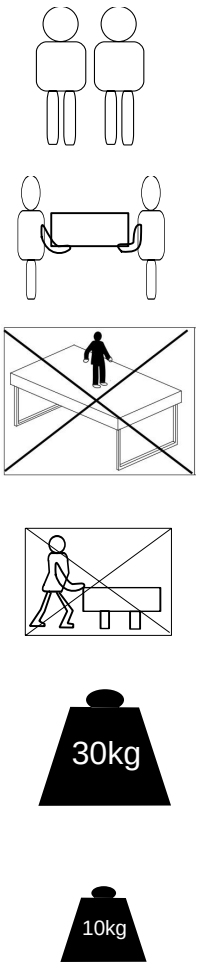

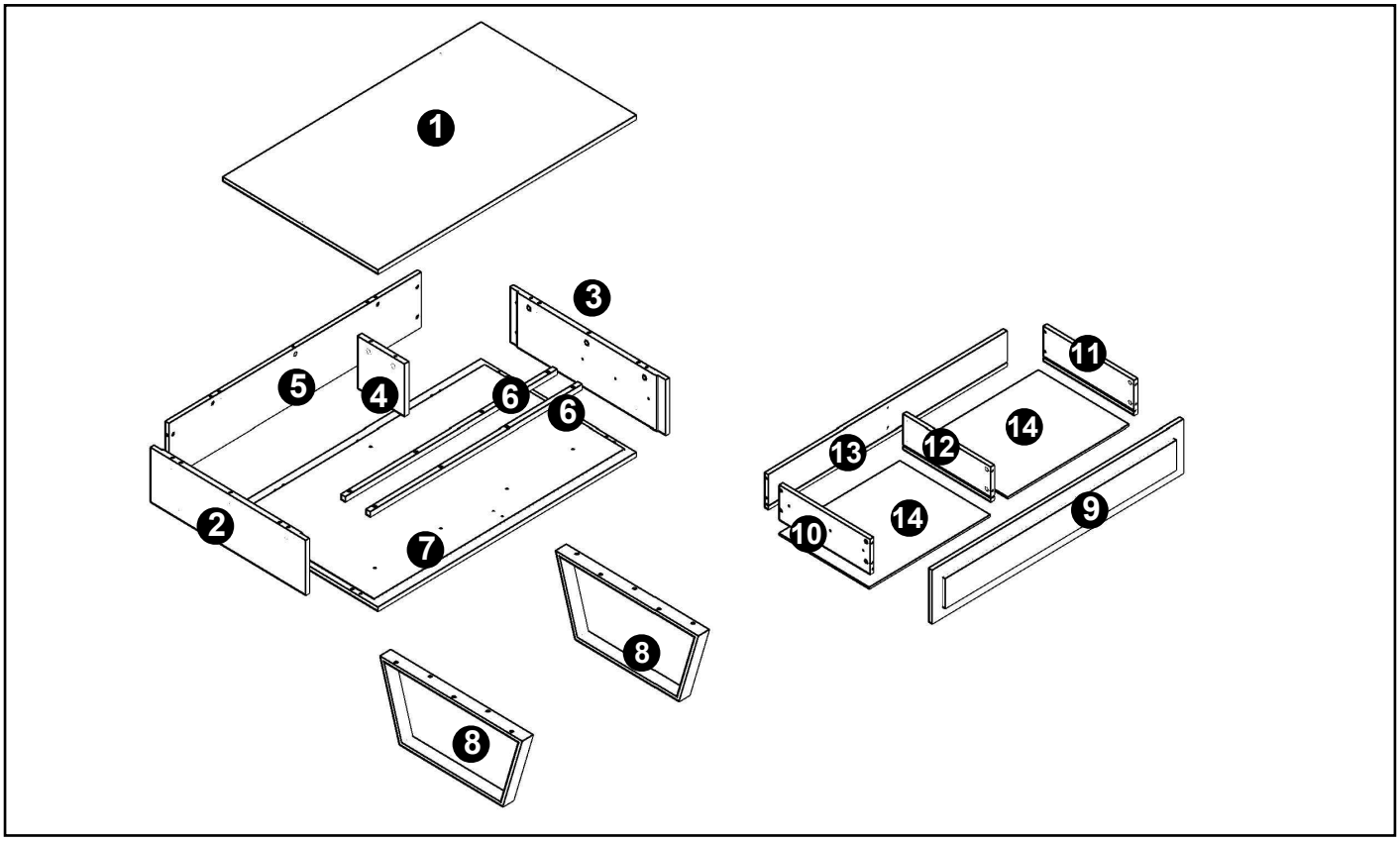

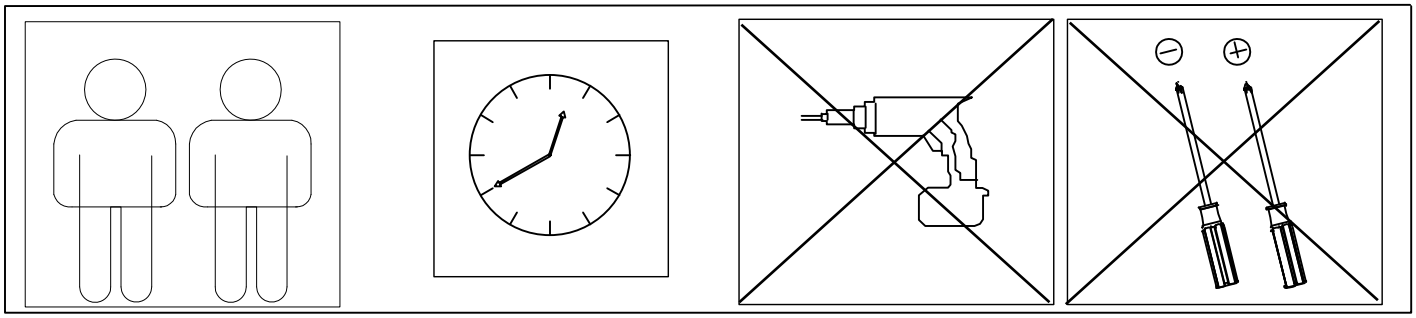

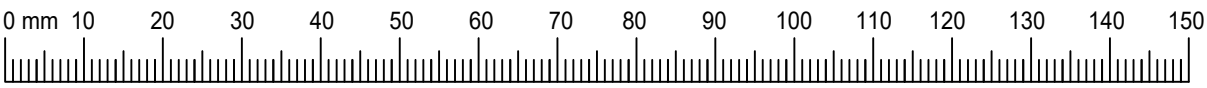

A	x12
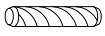	
Ø8x30mm	

B	x6
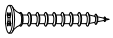	
M4.2*25mm	

C	x2
	

D	x8
	
Ø15x12mm	

E	x8
	
Ø6x35mm	

F	x18
	
M6x25mm	

G	x12
	
3.5*12mm	

H	x1
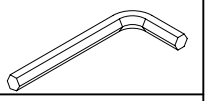	

I	x11
	
Ø7x50mm	

J	x1
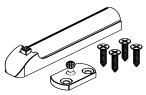	

K	x13
	
Ø10x9mm	

L	x13
	
Ø6x25mm	

M	x10
	
M6*18mm	

1

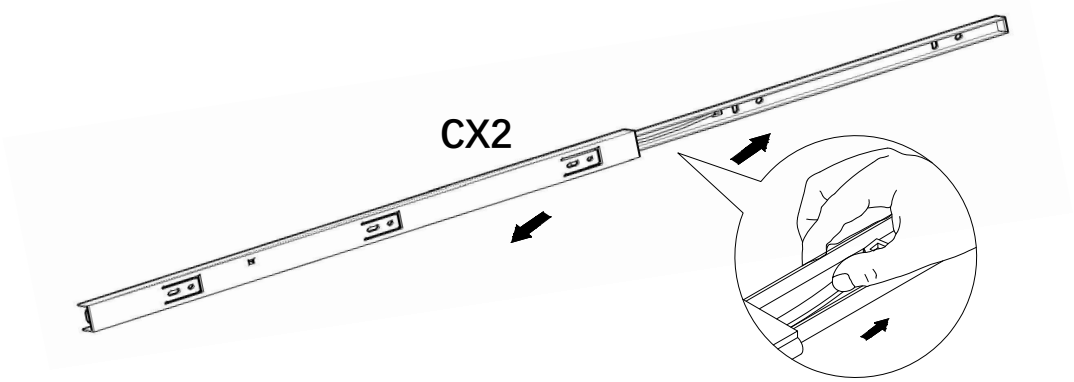

C	x2

2

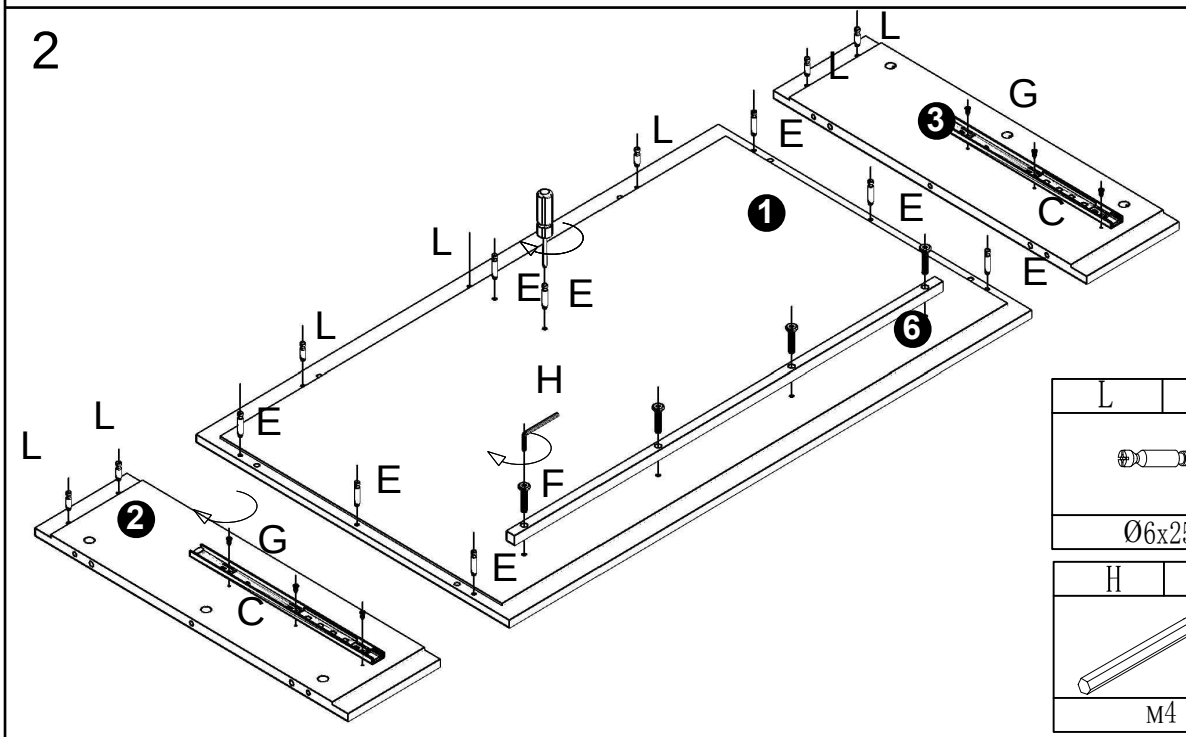

C	x2

E	x8
Ø6x35mm	

L	x7
Ø6x25mm	

G	x6
3.5*12mm	

H	x1
M4	

F	x4
M6x25mm	

3

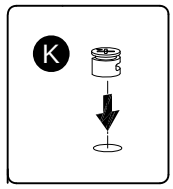

K	x4
Ø10x9mm	

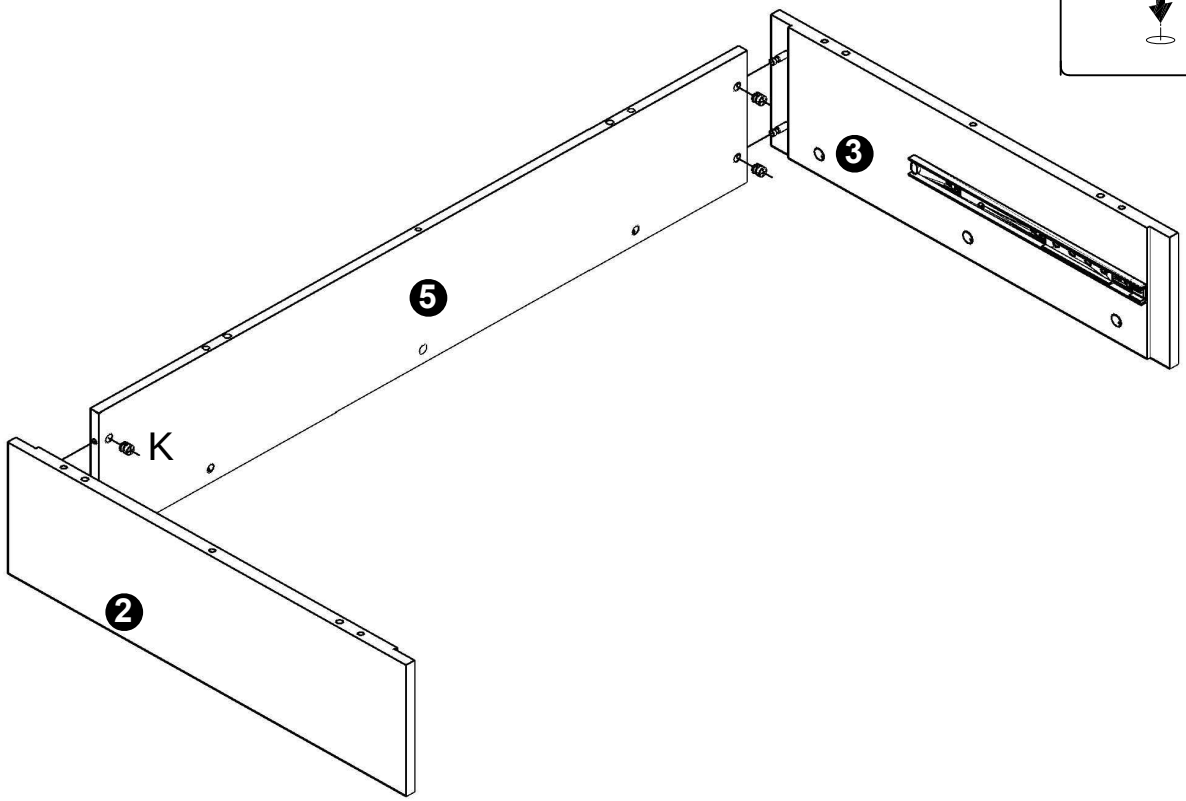

4

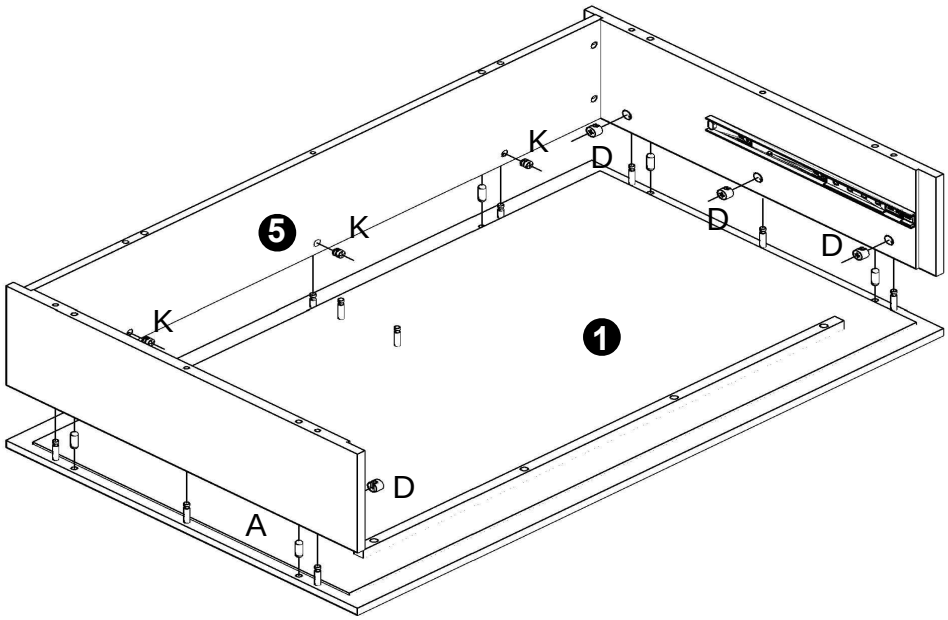

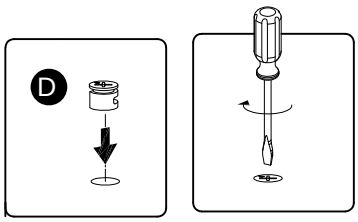

D	x6
Ø15x12mm	

K	x3
Ø10x9mm	

A	x6
Ø8x30mm	

5

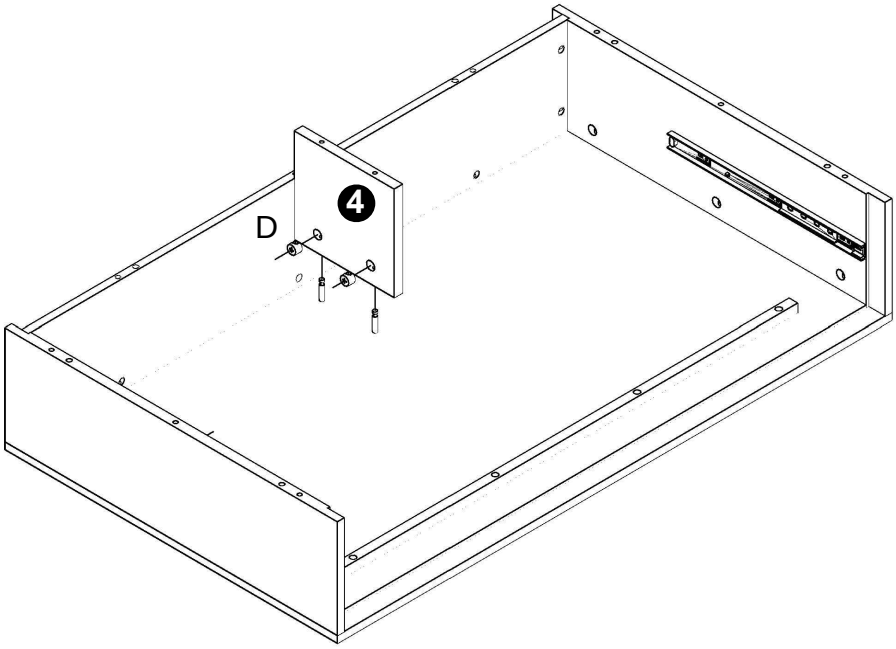

D	x2
Ø15x12mm	

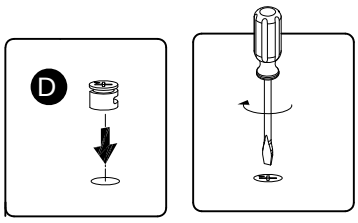

6

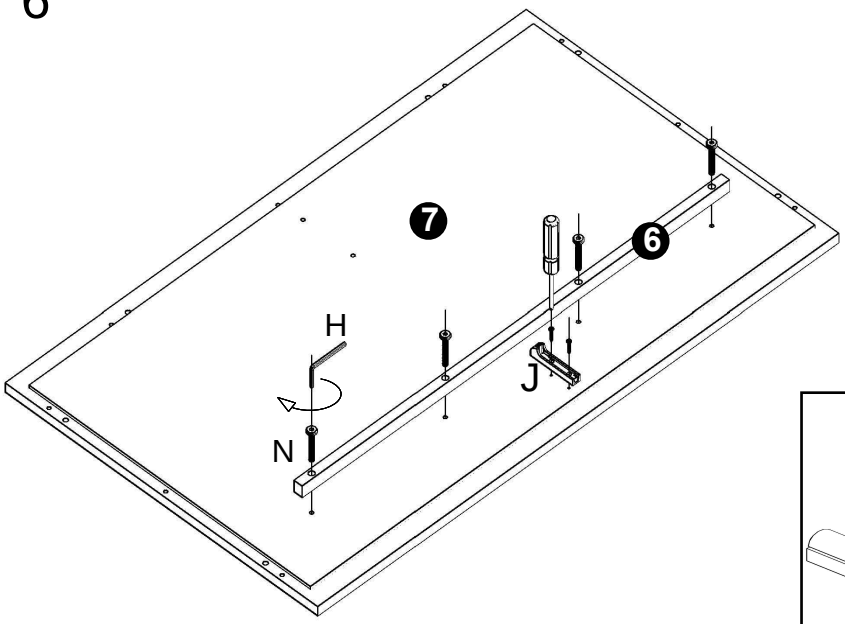

H	x1
M4	

F	x4
M6x25mm	

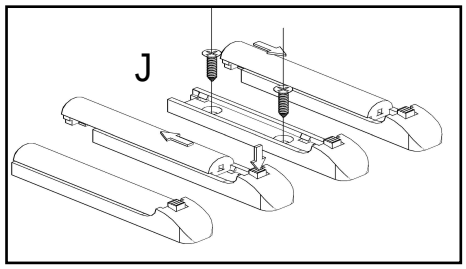

J	x1

7

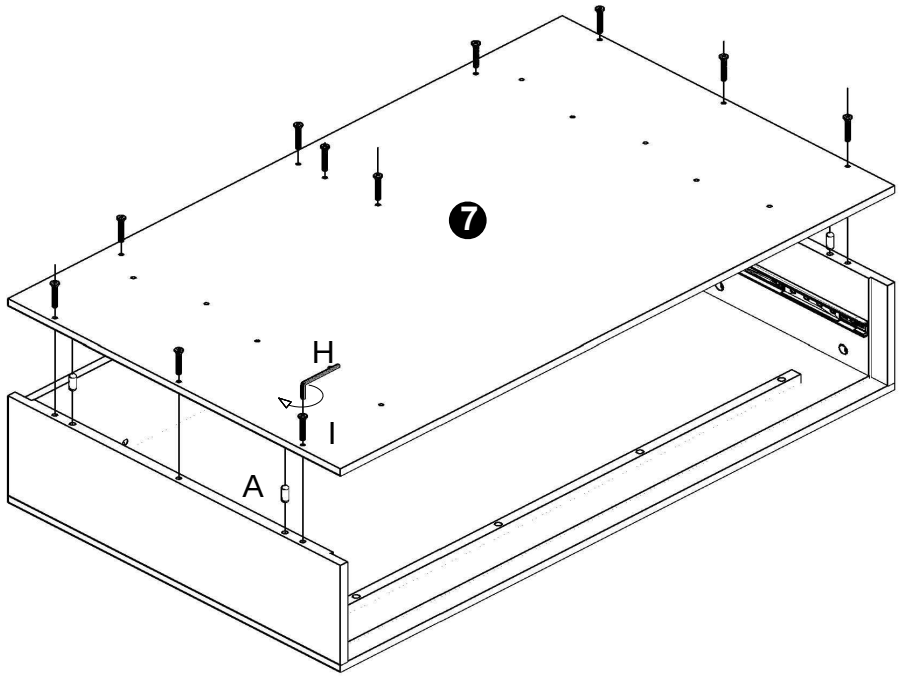

A	x6
Ø8x30mm	

I	x11
Ø7x50mm	

H	x1
M4	

8

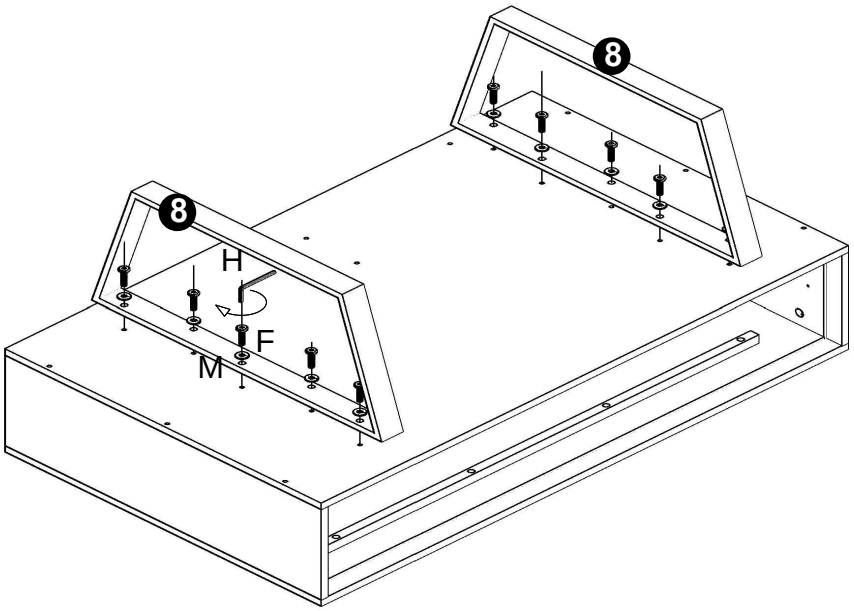

F	x10
M6x20mm	

H	x1
M4	

M	x10
M6*18mm	

9

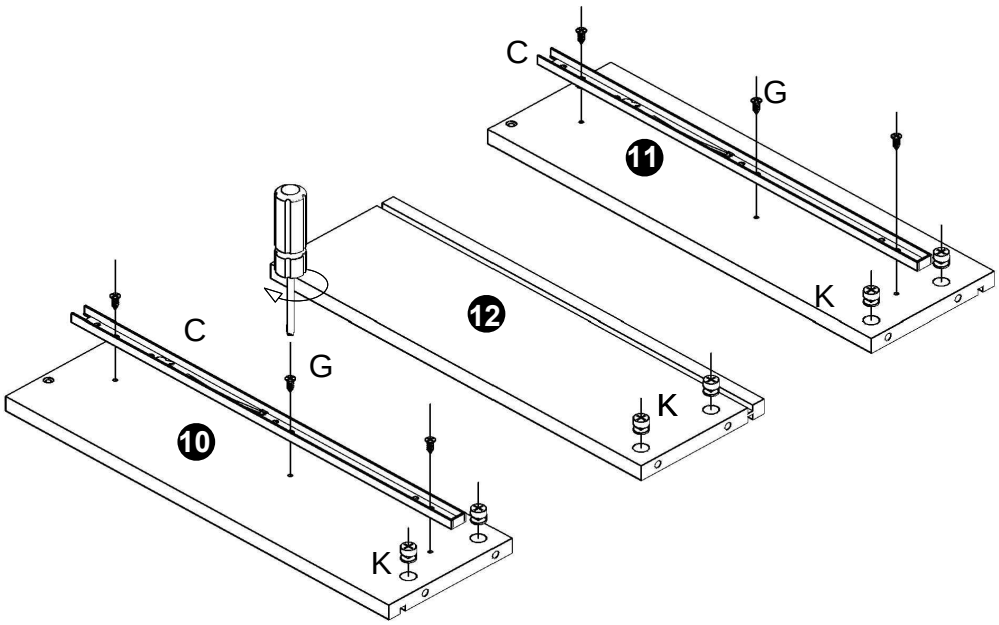

C	x2

G	x6
3.5*12mm	

K	x6
Ø10x9mm	

10

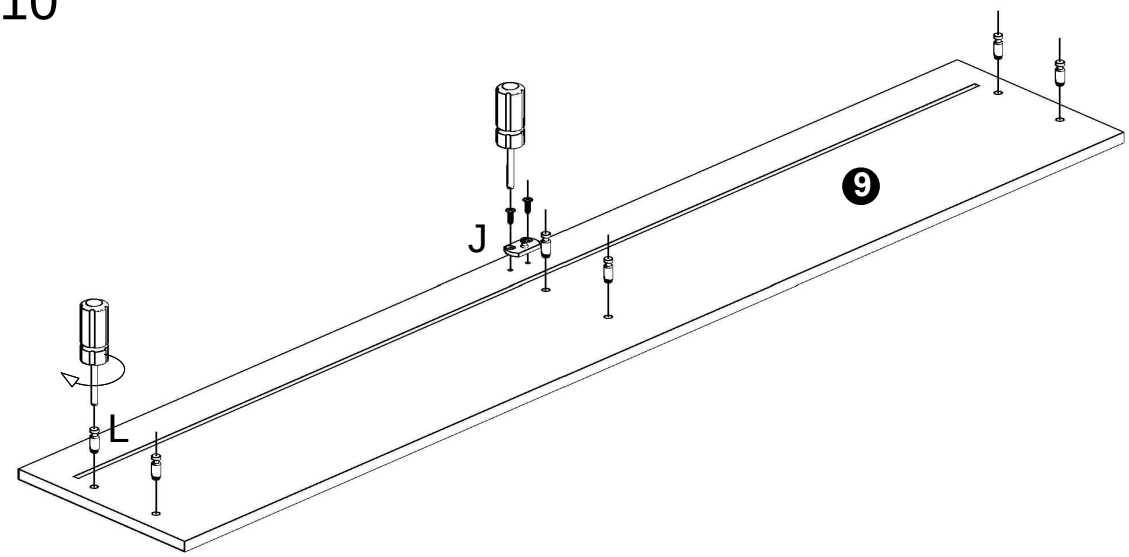

J	x1
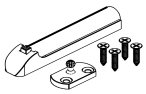	

L	x6
	
Ø6x25mm	

11

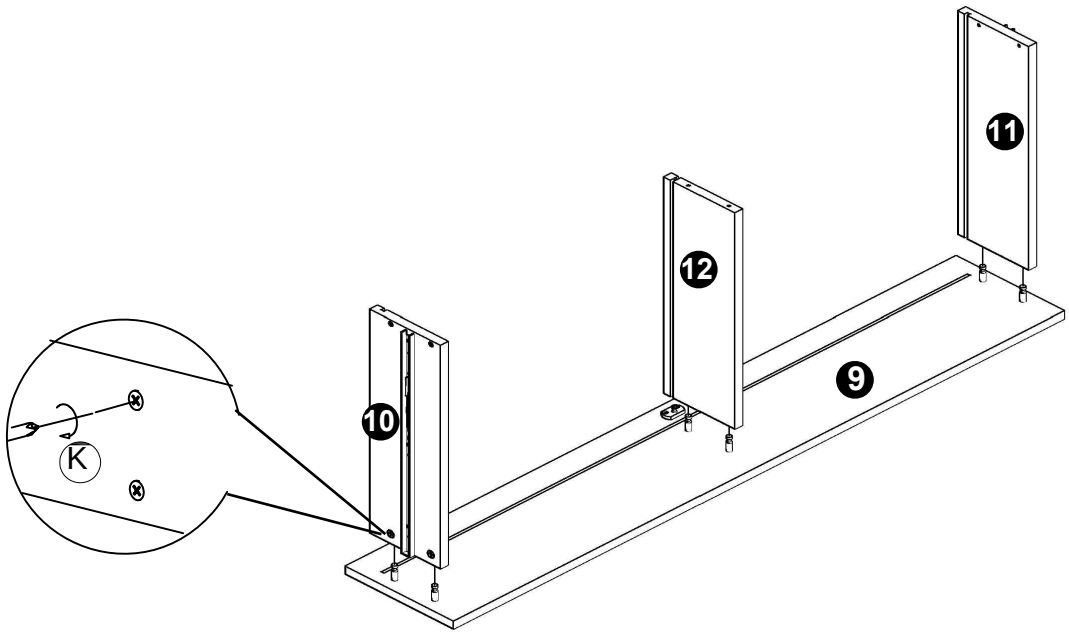

12

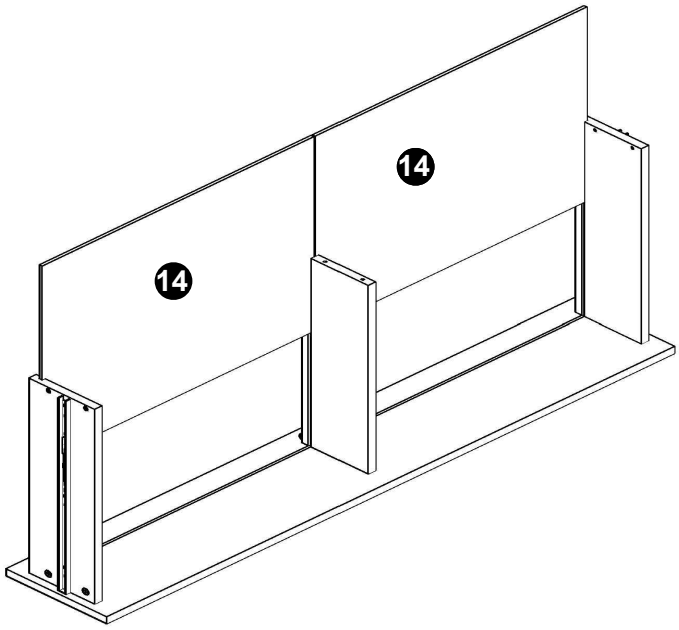

13

B	x6
	
M4.2*25mm	

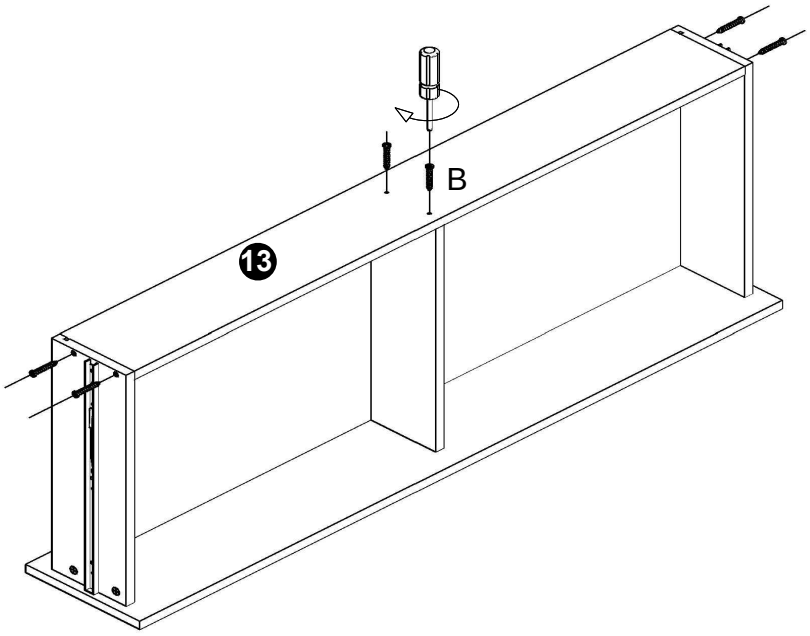

14

