MELBOURNE

ASSEMBLY INSTRUCTION

COFFEE TABLE
ART. NO. - 73925-100
100X59X32 CM

ASSEMBLY INSTRUCTIONS

A 8x
M 8X20MM

B 8x
20X8MM

C 1x

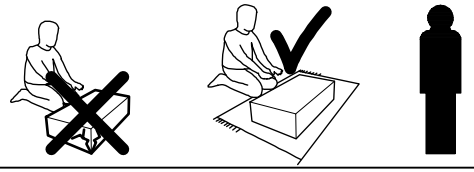

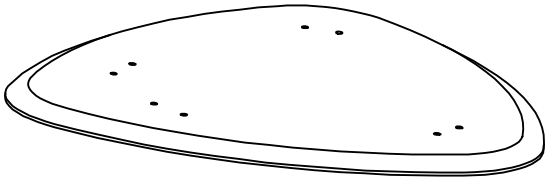

1 X

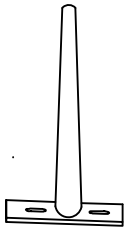

4 X



HARDWARE

1

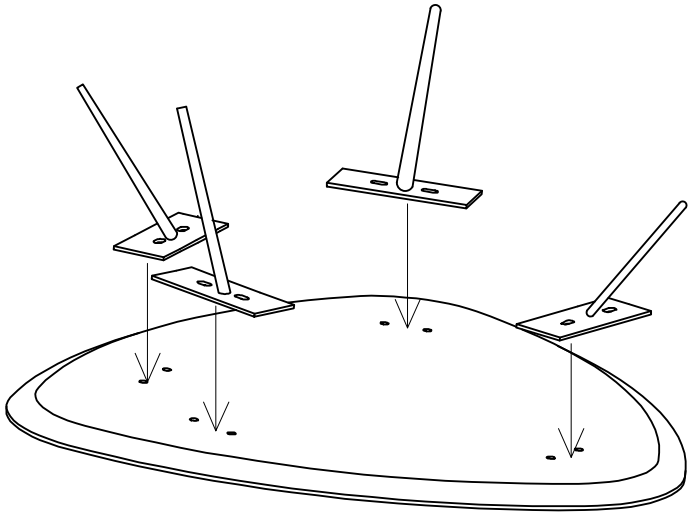

2

8X

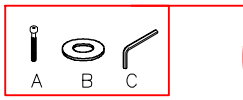

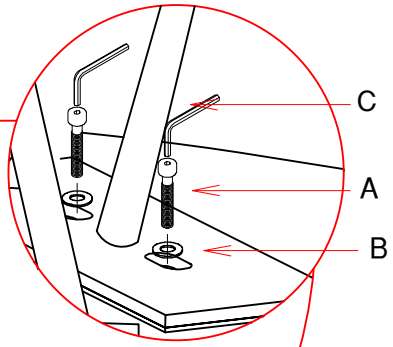

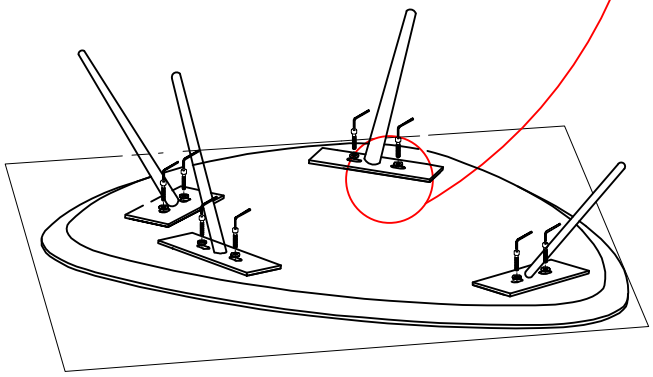

3

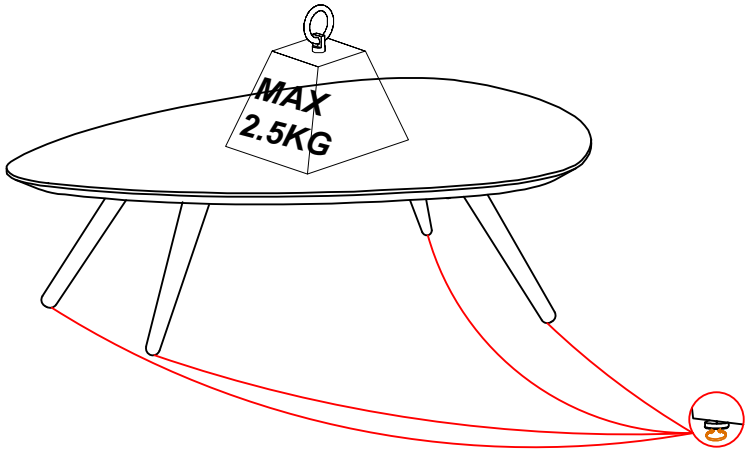

ADJUSTABLE
SLIDING NAILS

