MELBOURNE

SIDE TABLE
ART. NO. - 74124
40x40x450 CM



ASSEMBLY INSTRUCTIONS



A
8x
M 6X20MM



B
8x
25X8MM



C
1x

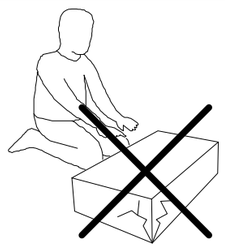

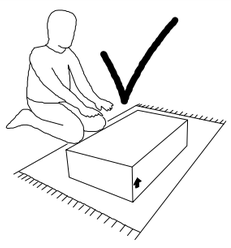

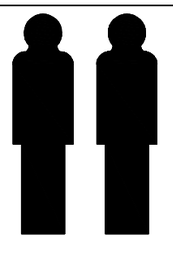

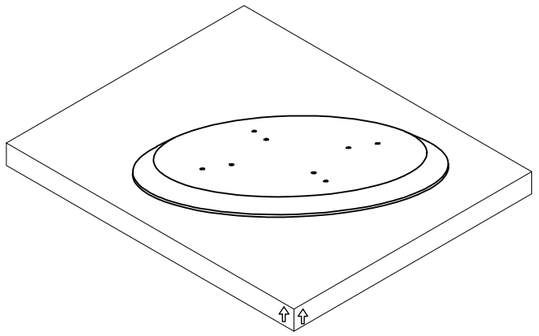

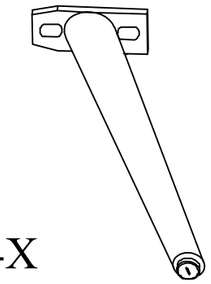

4X



1

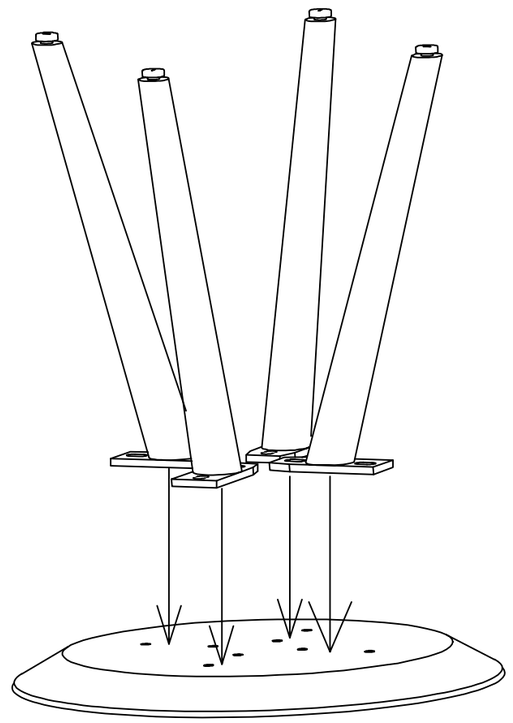

2

8X

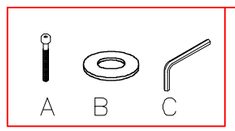

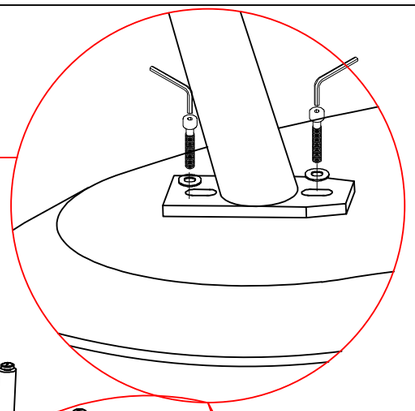

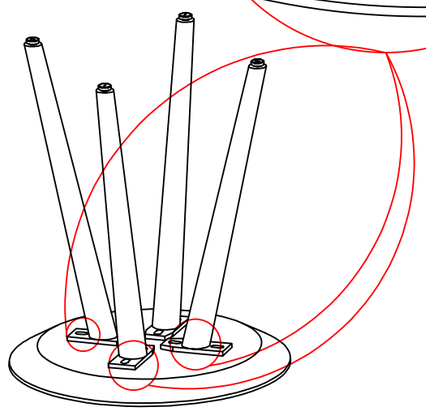

3

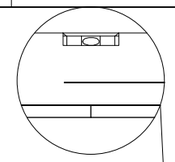

WATER LEVEL

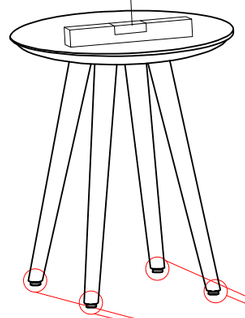

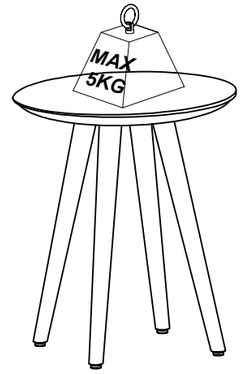

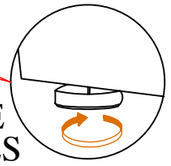

ADJUSTABLE
SLIDING NAILS

