17130028-01
LOWBOARD

BDSK Handels GmbH & Co.KG
Mergentheimer Straße 59
DE-97084 Würzburg
E-Mail:Info@xxxlutz.at

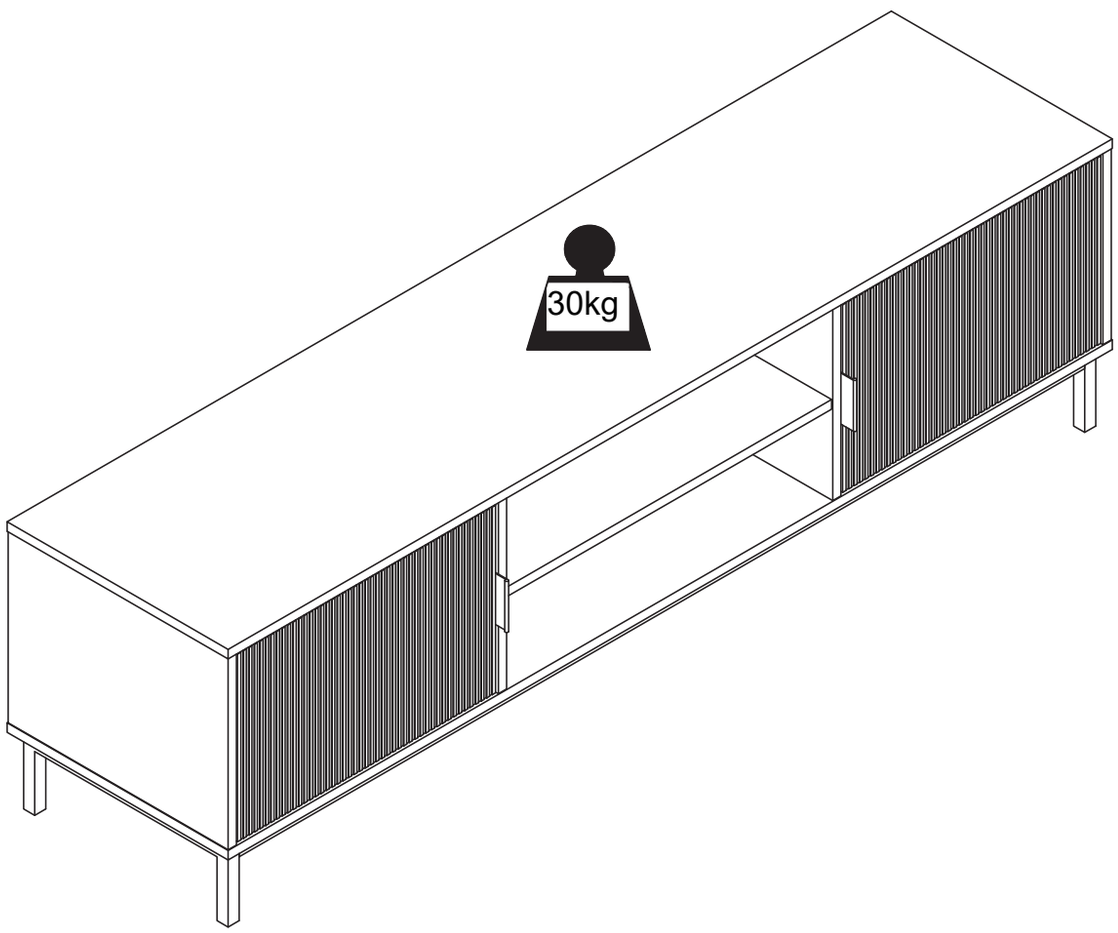

22
PAP



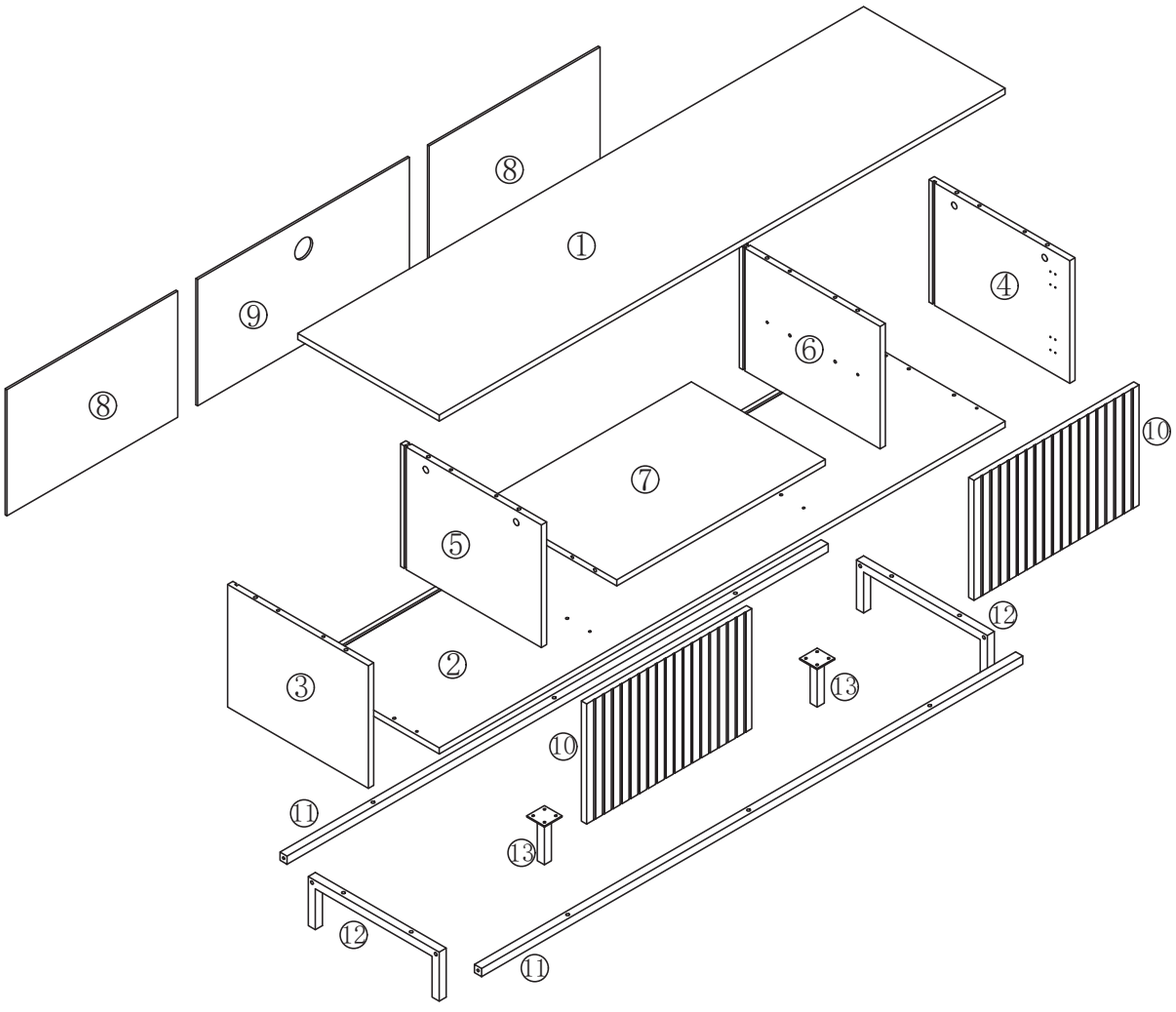

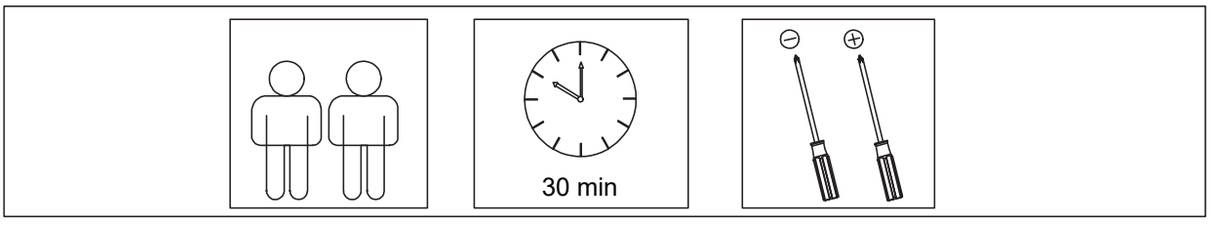

A ×12	B ×12	C ×18	D ×10	E ×10	F ×10	G ×4
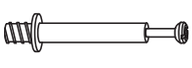		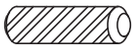				
M6x35MM	φ15x10	Φ 6x30	M4x40MM	M3x14MM	M6x30MM	M6x40MM

H ×1	I ×8	J ×2	K ×42	L ×12	M ×8	N ×2
		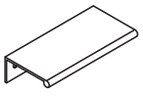		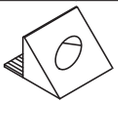		
			M3.5x14MM		M3.5x12MM	

O ×2	P ×2	Q ×4	R ×2	S ×2
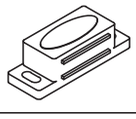		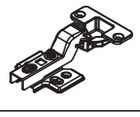		

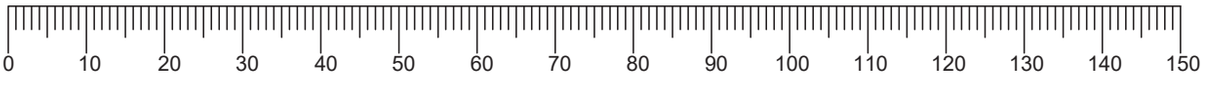

1

A	×12
M6x35MM	

E	×4
M3x14MM	

O	×2

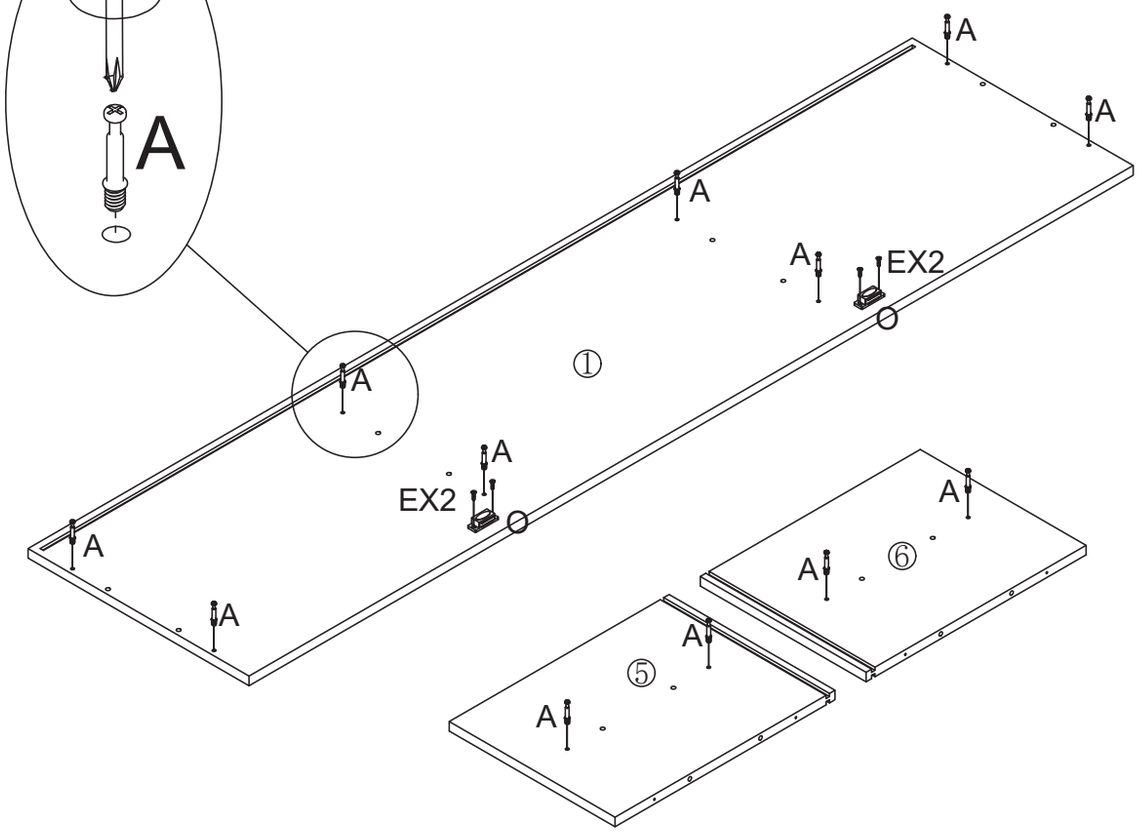

2

B	×4
φ15x10	

C	×4
φ6x30	

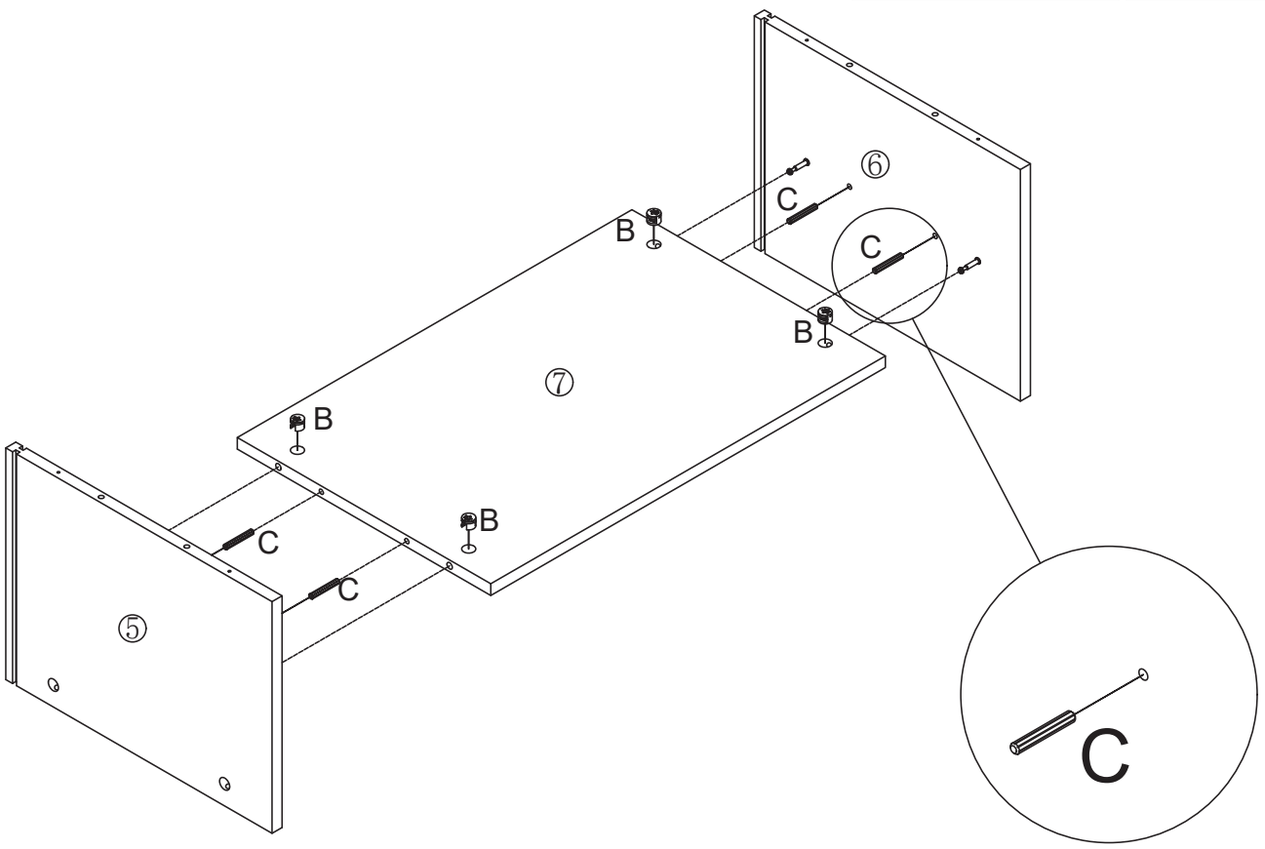

③

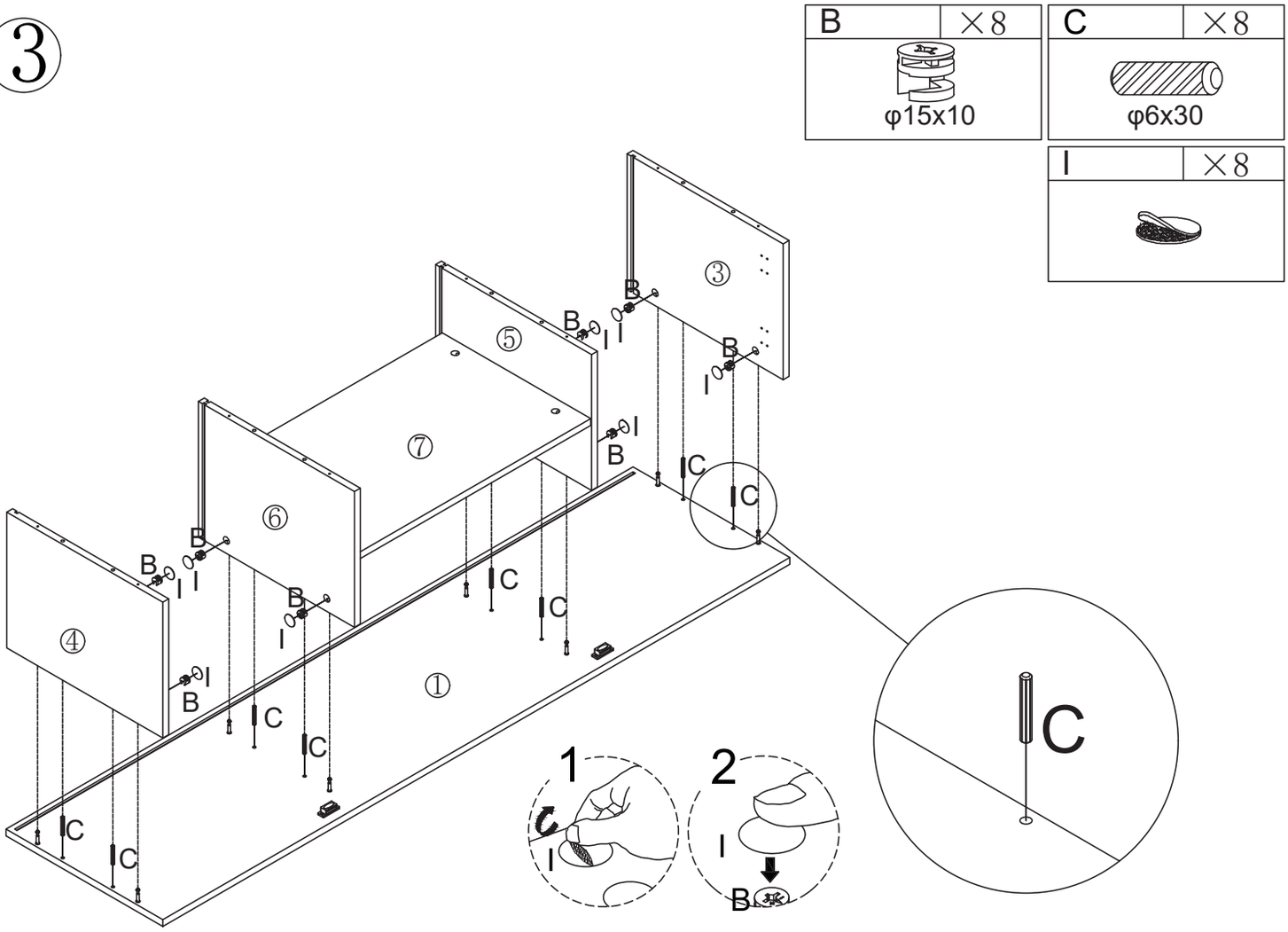

④

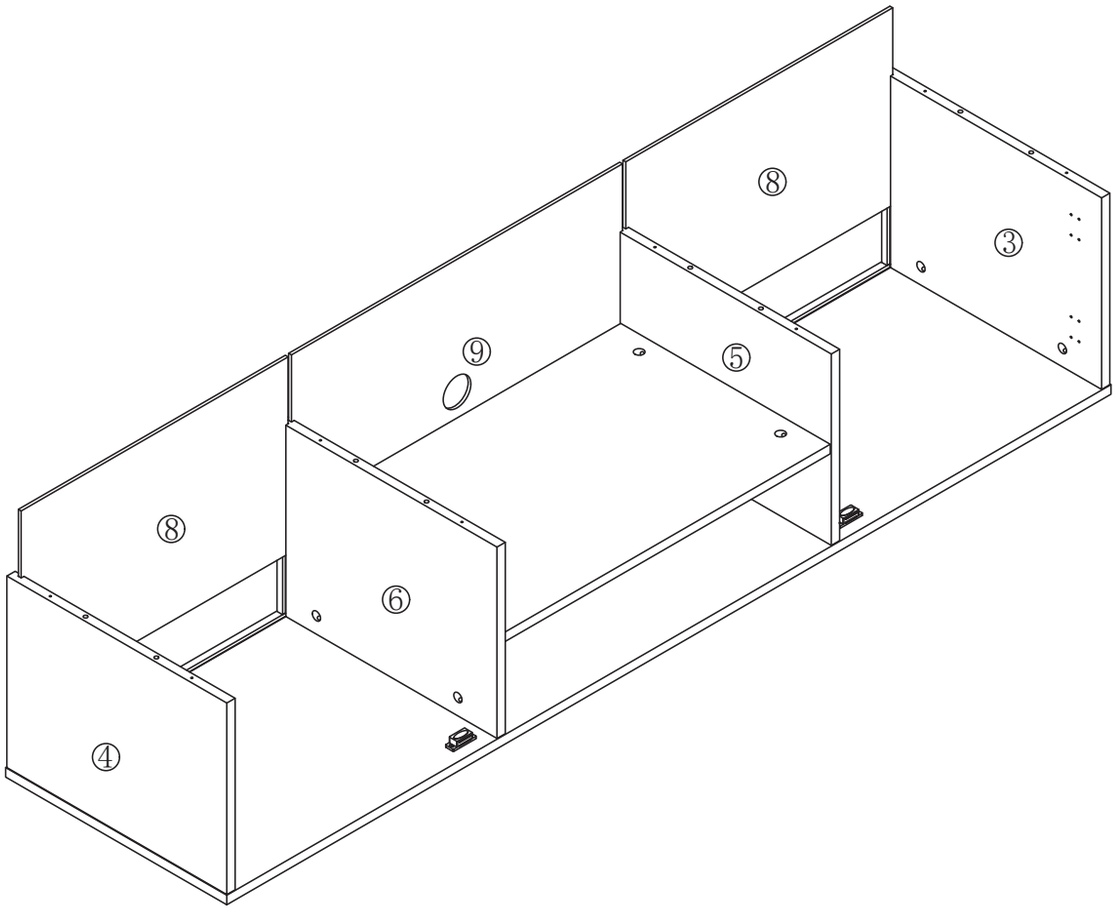

5

C	×6
φ6x30	

D	×8
M4x40MM	

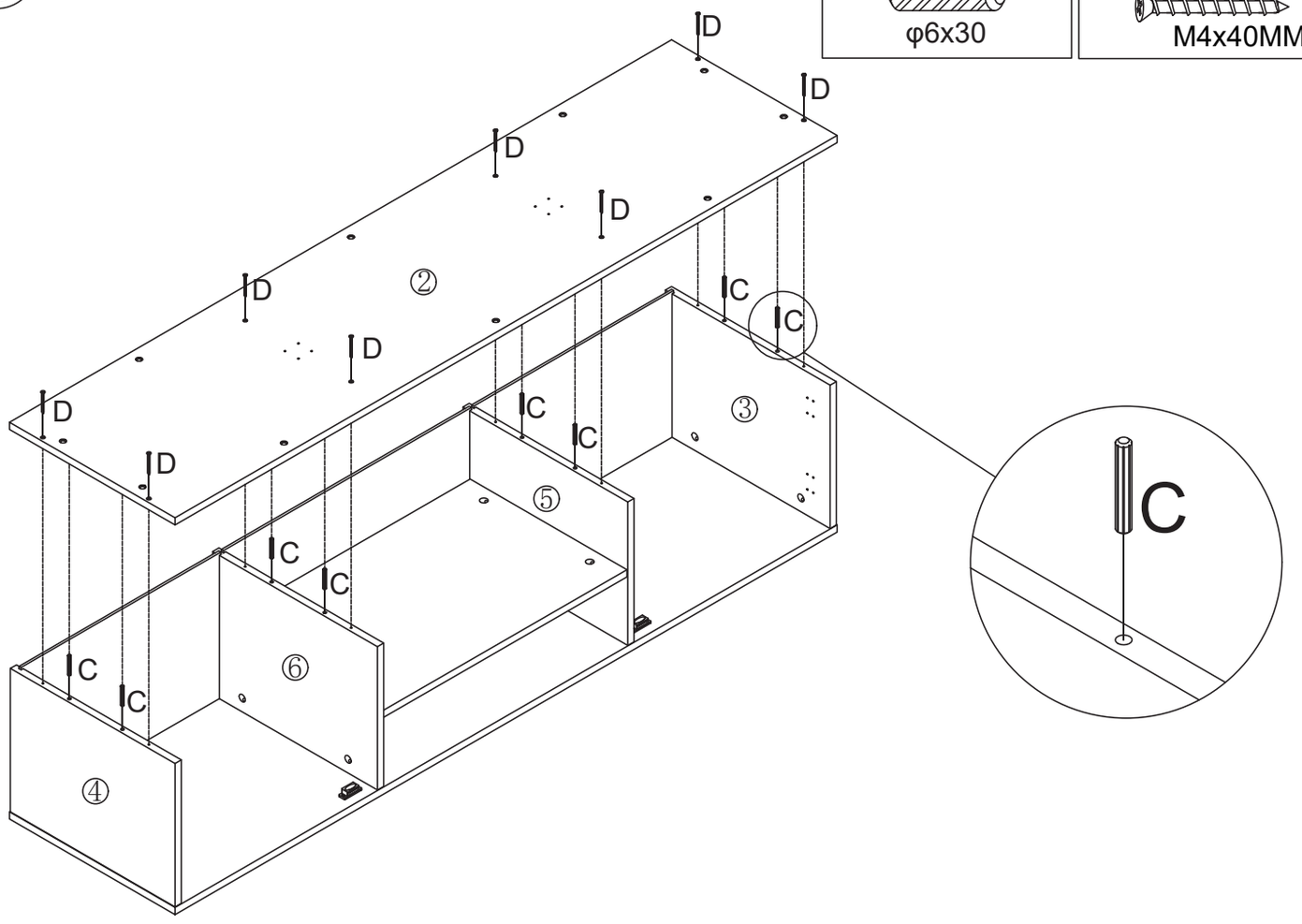

6

G	×4
M6x40MM	

H	×1

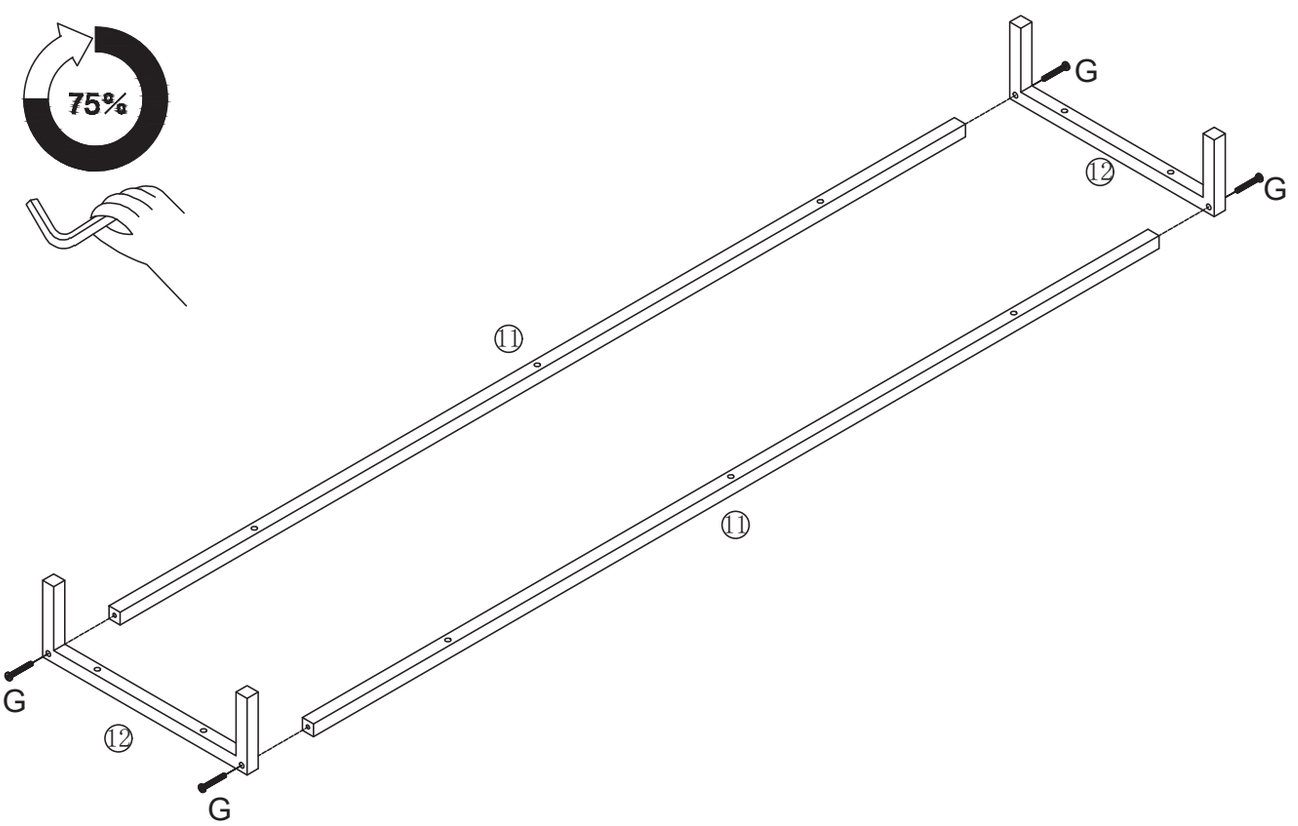

7

F	×10
M6x30MM	

H	×1

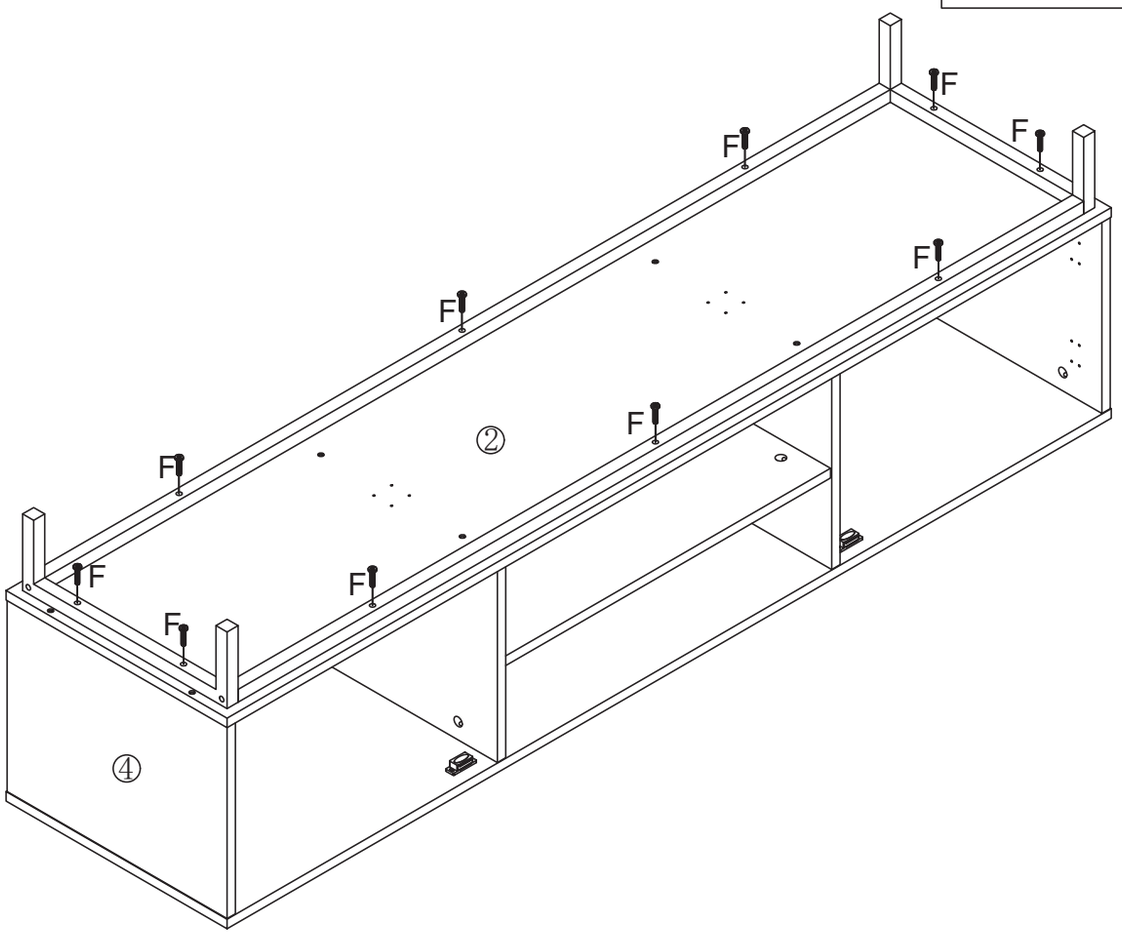

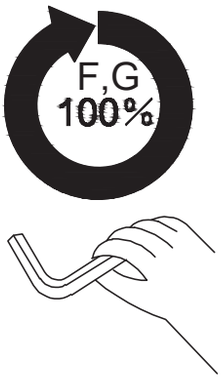

8

M	×8
M3.5x12MM	

S	×2

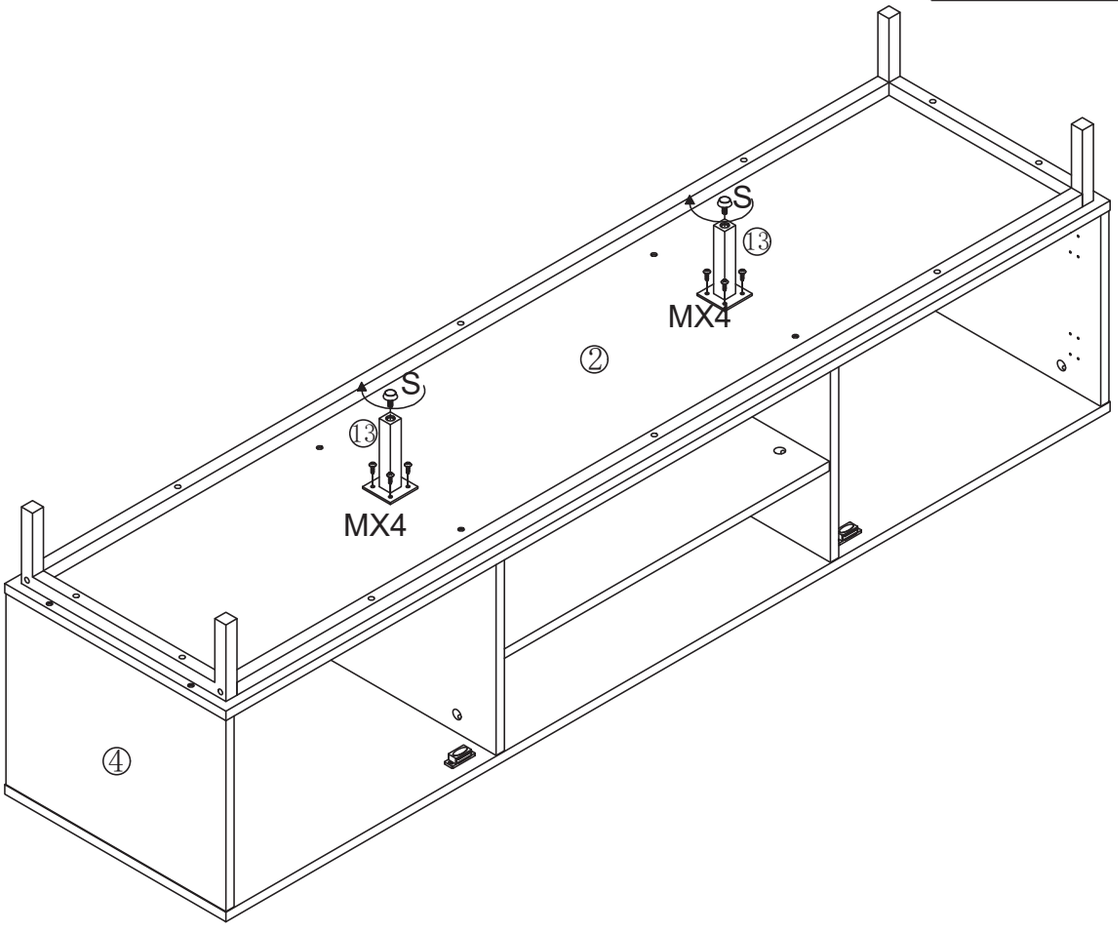

9

L	×12

N	×2

K	×18
M3.5x14MM	

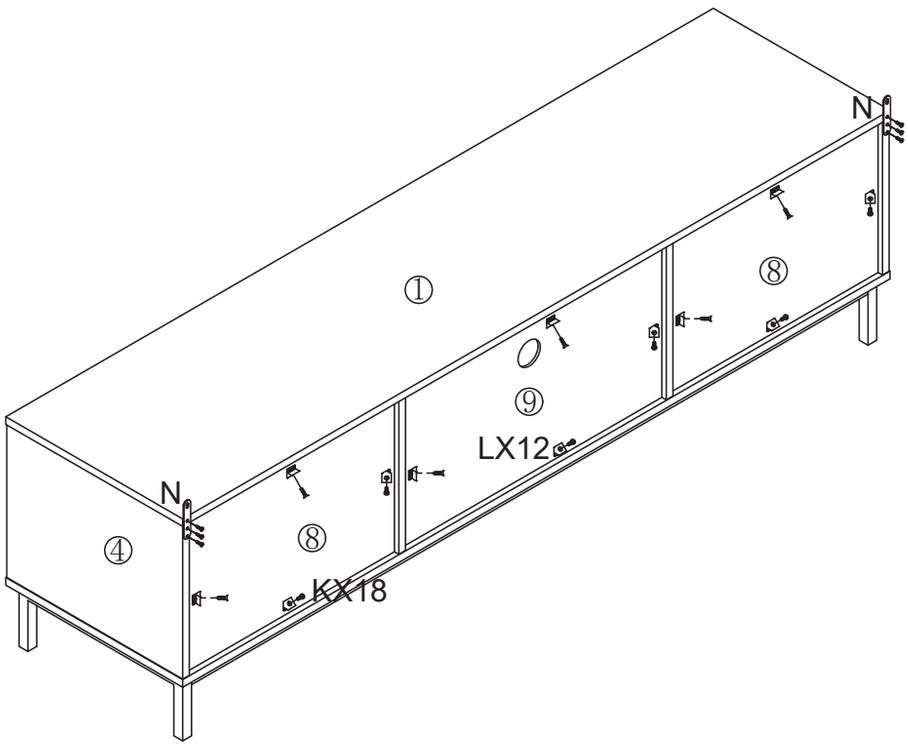

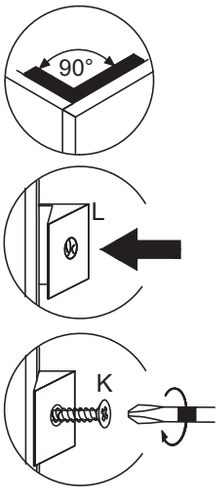

10

J	×2

E	×6
M3x14MM	

Q	×4

K	×8
M3.5x14MM	

R	×2

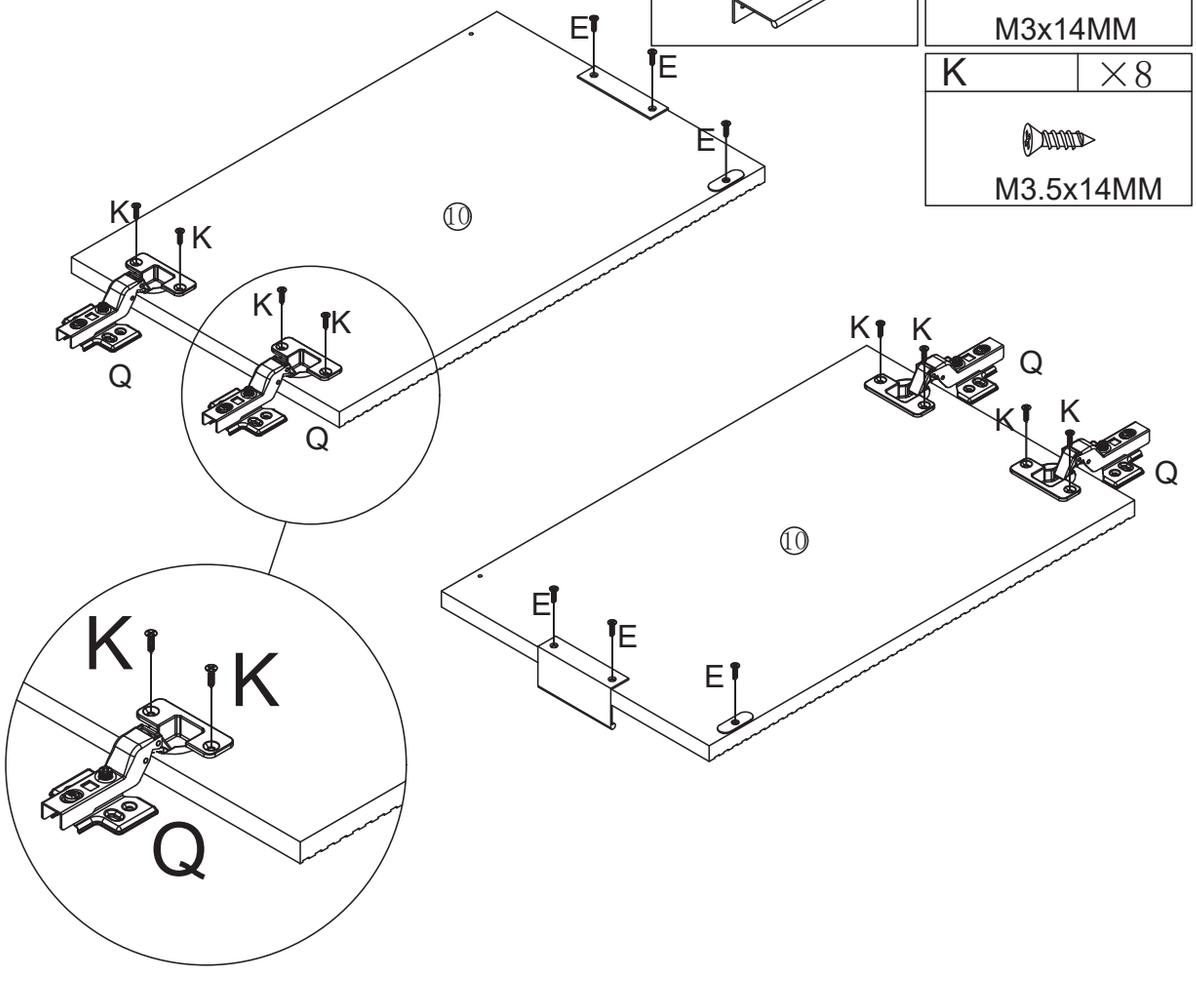

11

K	×16
M3.5x14MM	

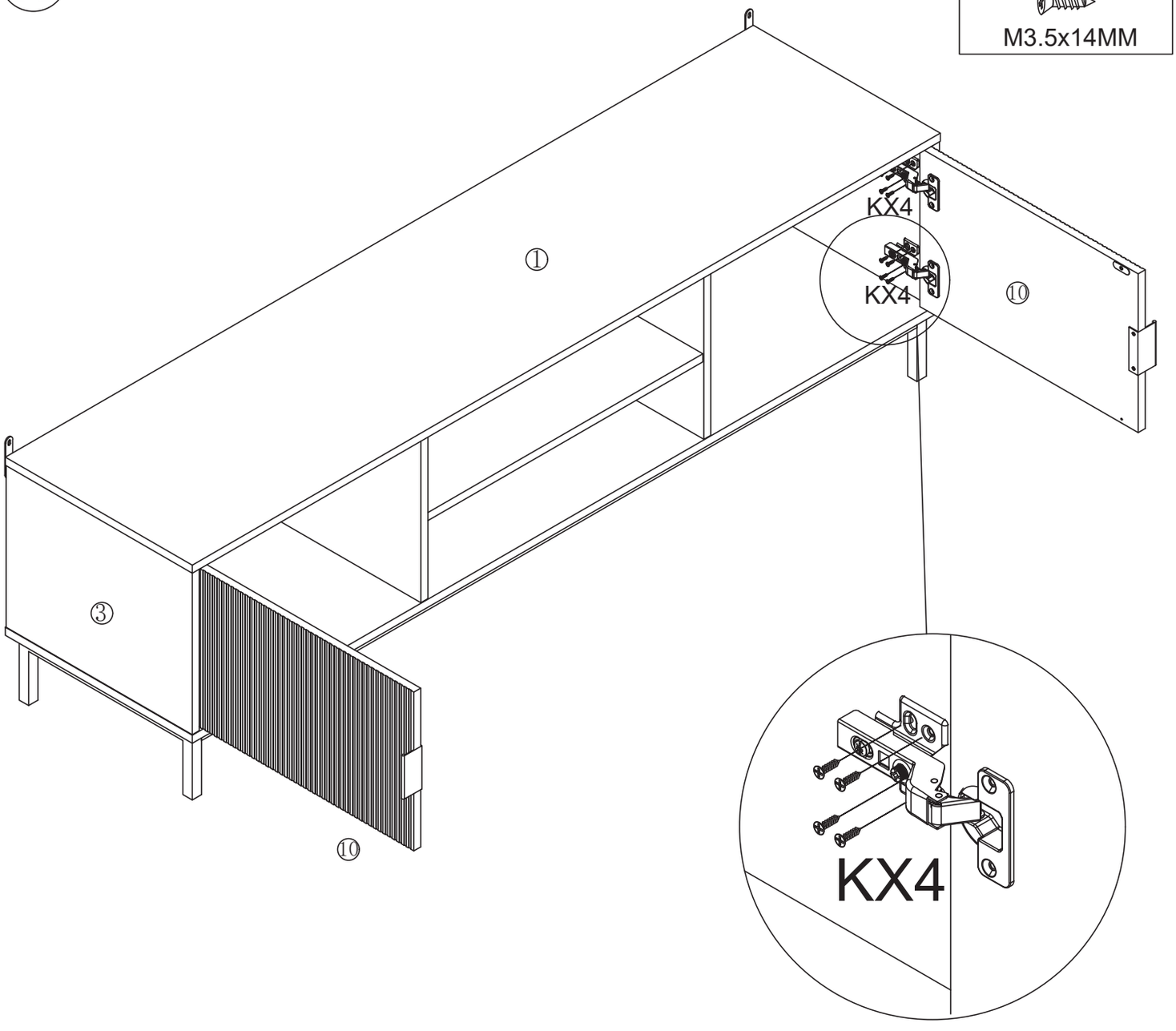

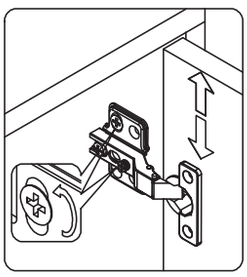

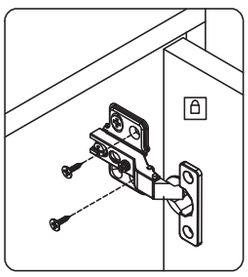

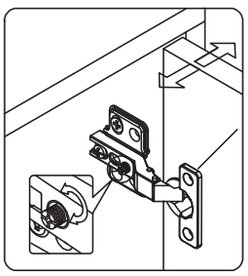

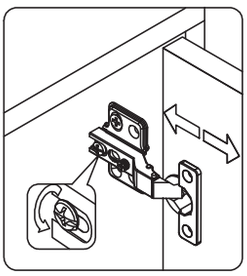

12

D	×2
M4x40MM	

P	×2

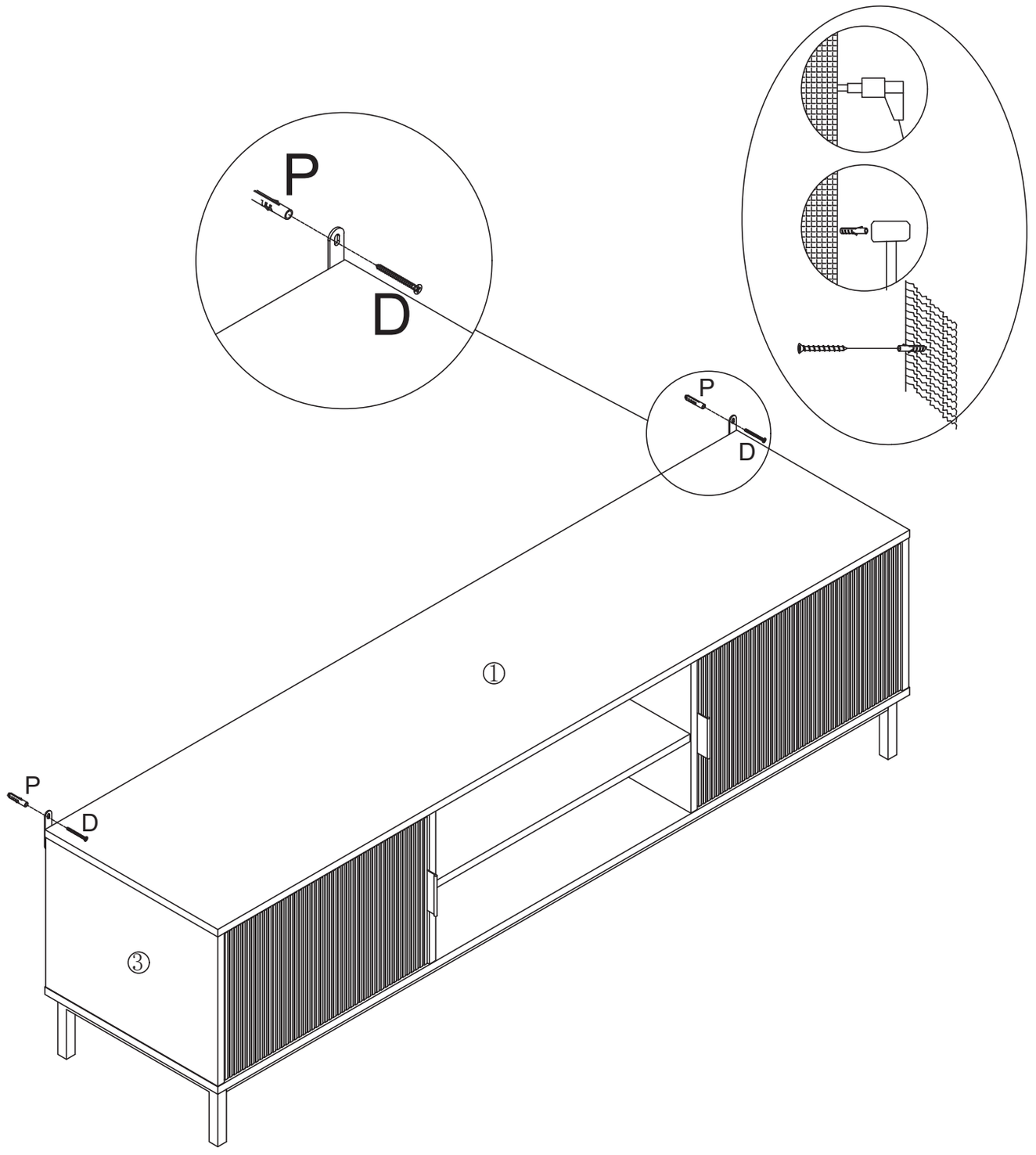

⑬

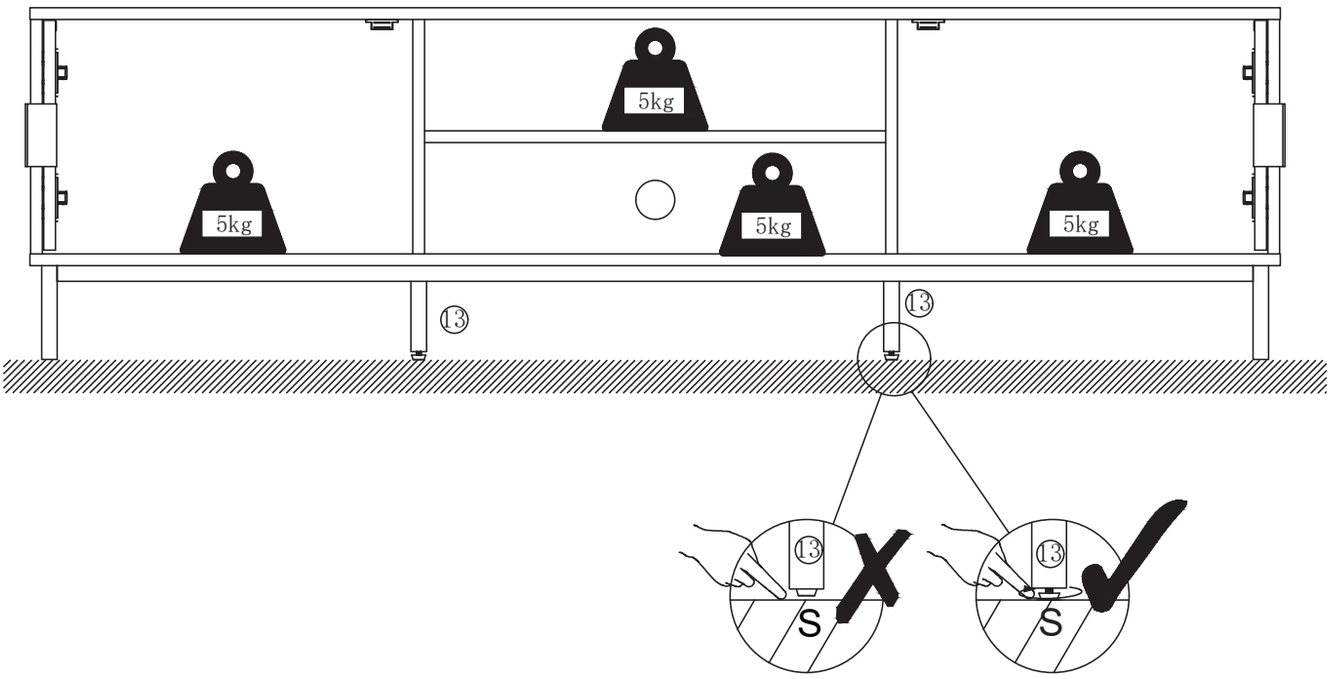

⑭

