MELBOURNE

COFFEE TABLE
ART. NO. - 73930
60x60x450 CM



ASSEMBLY INSTRUCTIONS


A
8x
M 6X20MM


B
8x
25X8MM


C
1x

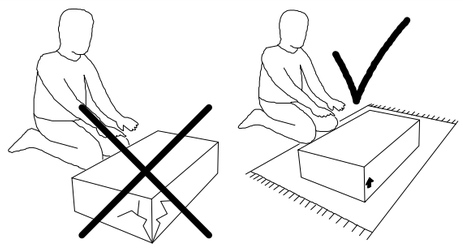

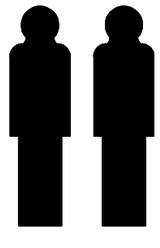

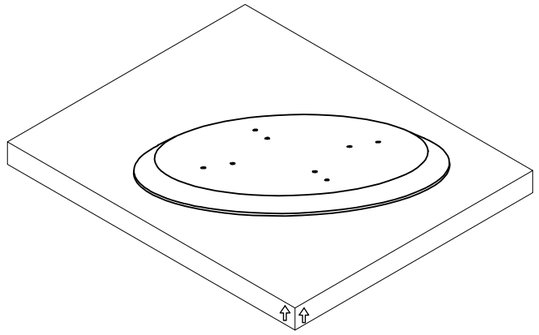

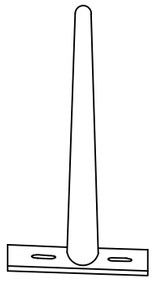
4X


HARDWARE

1

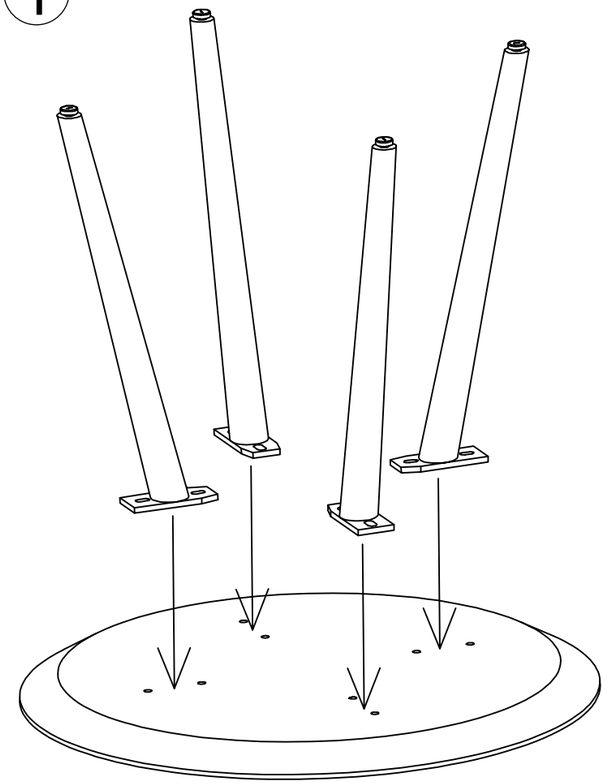

2


8X

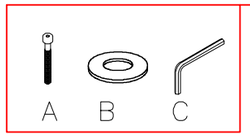
A B C

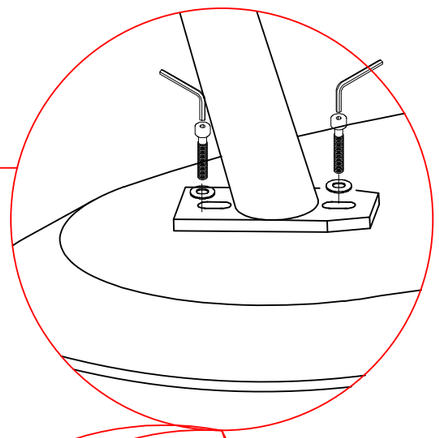

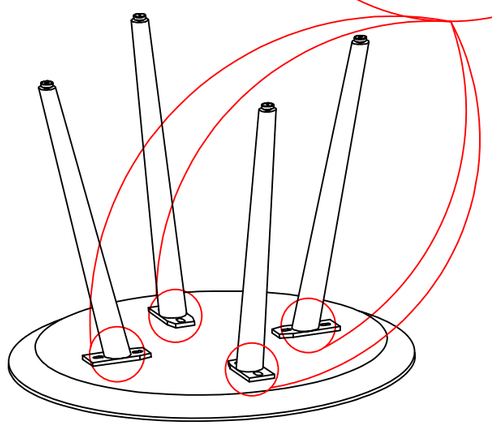

3

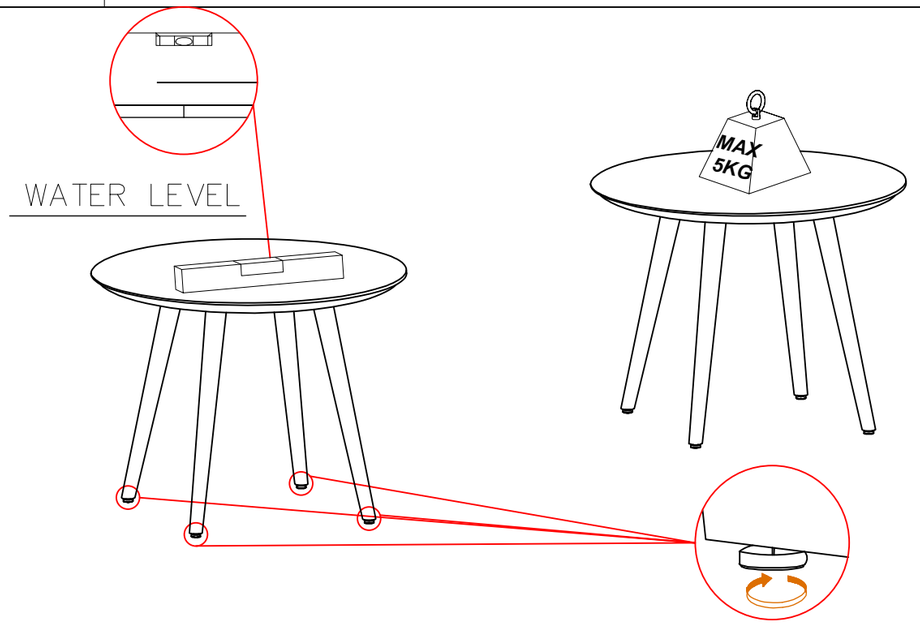

ADJUSTABLE
SLIDING NAILS

