84430065-01

WINNIE

BDSK Handels GmbH & Co. KG
Mergentheimer Straße 59
DE-97084 Würzburg
Germany
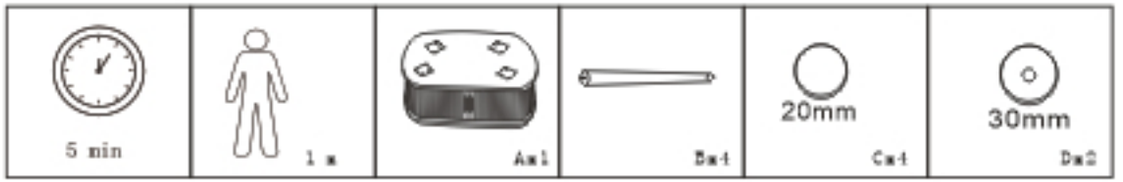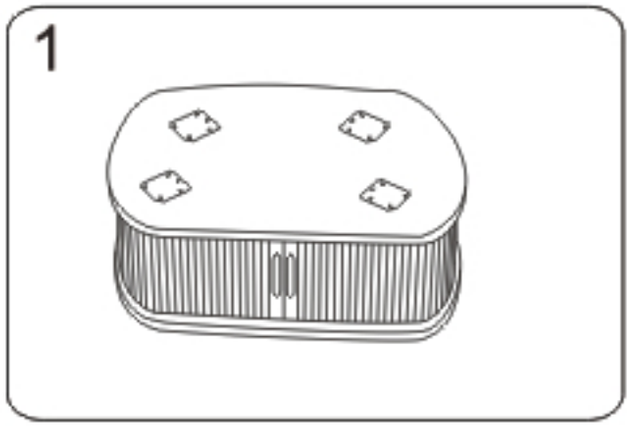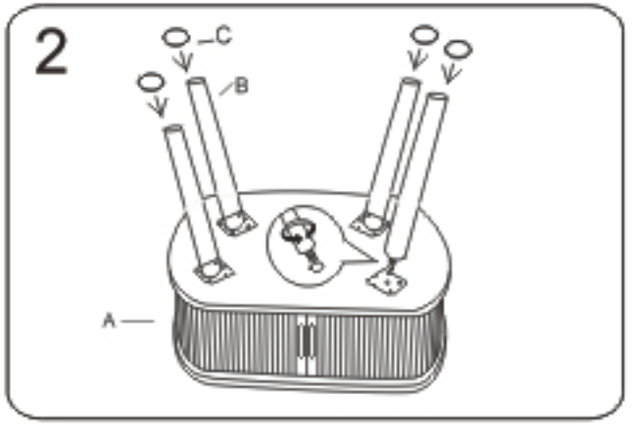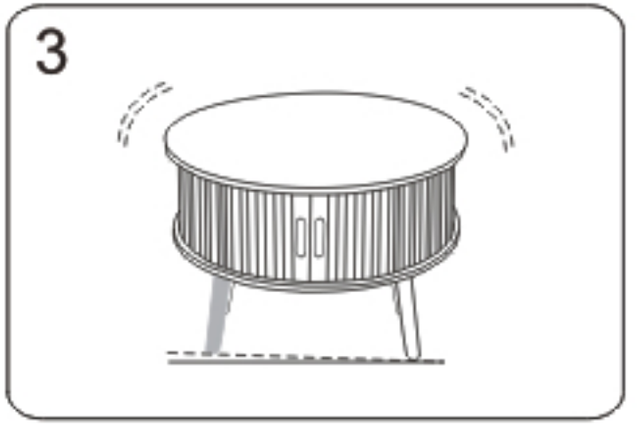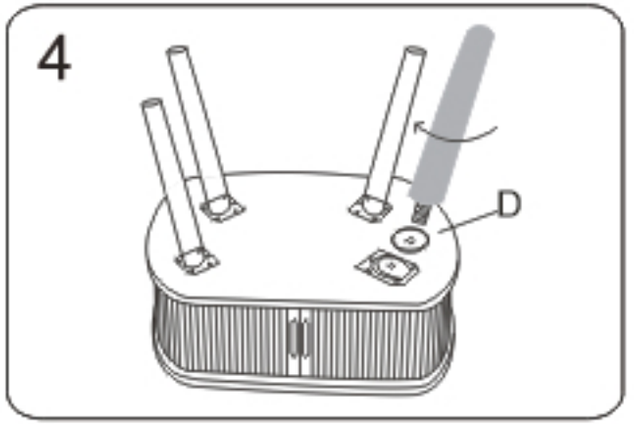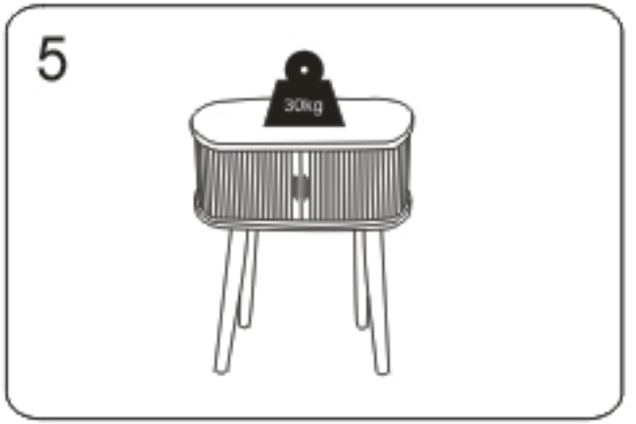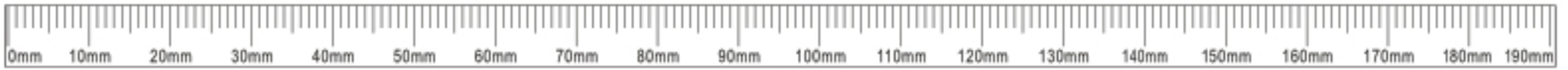
CARRYHOME