Art No	Description
88888-999	SP - Maglehem Sofa Table - Screw set
88888-1000	SP - Maglehem Sofa Table - Plastic Feet
88888-1001	SP - Maglehem Sofa Table - Glass top (top Shelf)
88888-1002	SP - Maglehem Sofa Table - Glass top (Bottom Shelf)

furniture/fashion
Design by Daniel Johansson & Laila Bagge

VENTURE DESIGN
HOME & INTERIOR

15015-180

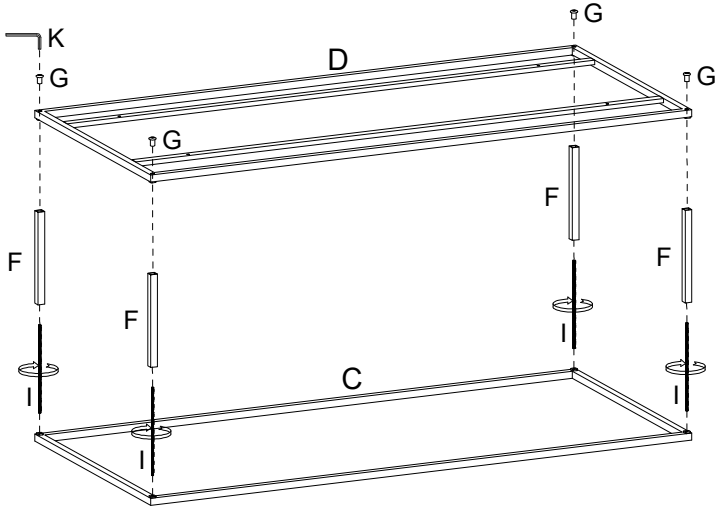

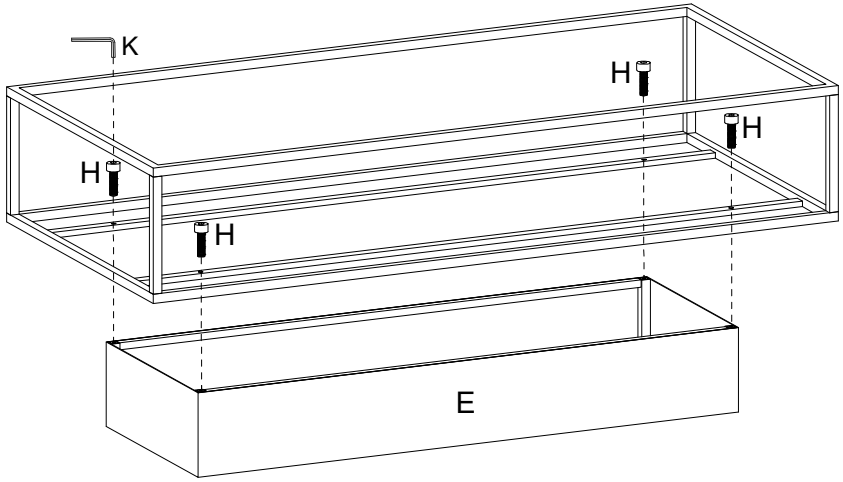

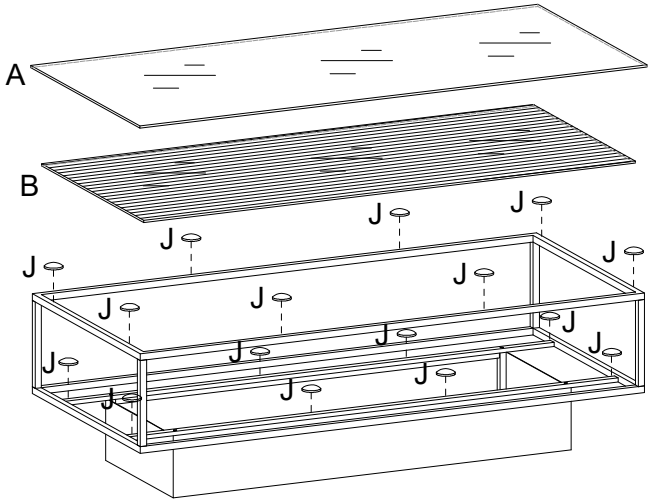

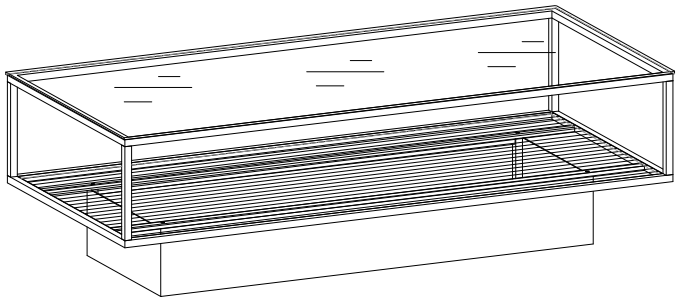

A		1	88888-1001
B		1	88888-1002
C		1	
D		1	
E		1	
F		4	
G		4	88888-999
H		4	88888-999
I		4	88888-999
J		16	88888-999
K		1	88888-999